BETHEL AVENUES PIPED WATER AND SEWER

CITY OF BETHEL

BETHEL, ALASKA

LOCATION MAP

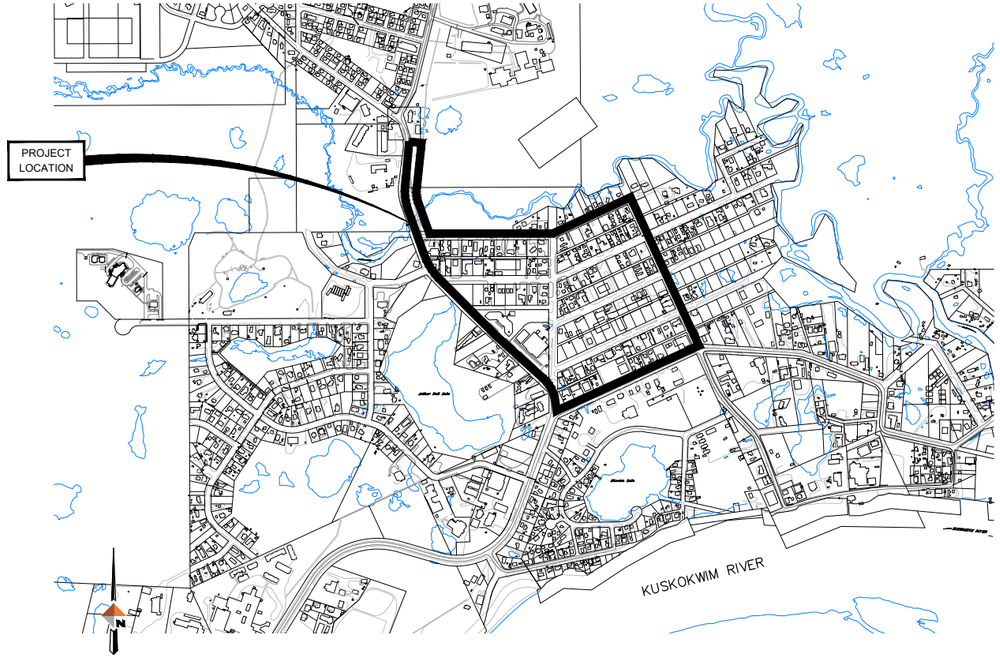

VICINITY MAP

PREPARED FOR:

CITY OF BETHEL
P.O. BOX 1388
BETHEL, AK 99559

SHEET INDEX

SHEET NO.	TITLE
G1	COVER SHEET
G2	KEY MAP, LEGEND, ABBREVIATIONS & NOTES
G3–G5	SCHEMATICS
–	SURVEY CONTROL (NOT PROVIDED)
–	EQUIPMENT SCHEDULE (NOT PROVIDED)
C01–C09	PLAN AND PROFILE
D1–D9	PIPE SUPPORT DETAILS
–	WTP IMPROVEMENTS (NOT PROVIDED)
–	MAIN LS IMPROVEMENTS (NOT PROVIDED)
–	ELECTRICAL DRAWINGS (NOT PROVIDED)

PREPARED BY:

DOWL
AECL848
WWW.DOWL.COM
3535 College Road, #100
Fairbanks, Alaska 99709
907-374-0275

35% SUBMITTAL

REVISIONS

REV	DATE	DESCRIPTION	BY

DOWL
WWW.DOWL.COM

BETHEL AVENUES PIPED WATER AND SEWER
BETHEL, ALASKA
COVER SHEET

LEGAL DESCRIPTION
LOCATION

PROJECT 1529.50149.01
DATE 06/10/2020

© DOWL 2020

SHEET
G1

C:\Civil 3D Projects 2018\2018\29\50149-01\Civil\SC-CS-CV-50149-01.dwg PLOT DATE 2020-6-26 12:51 SAVED DATE 2020-06-18 17:21 USER: bmjos

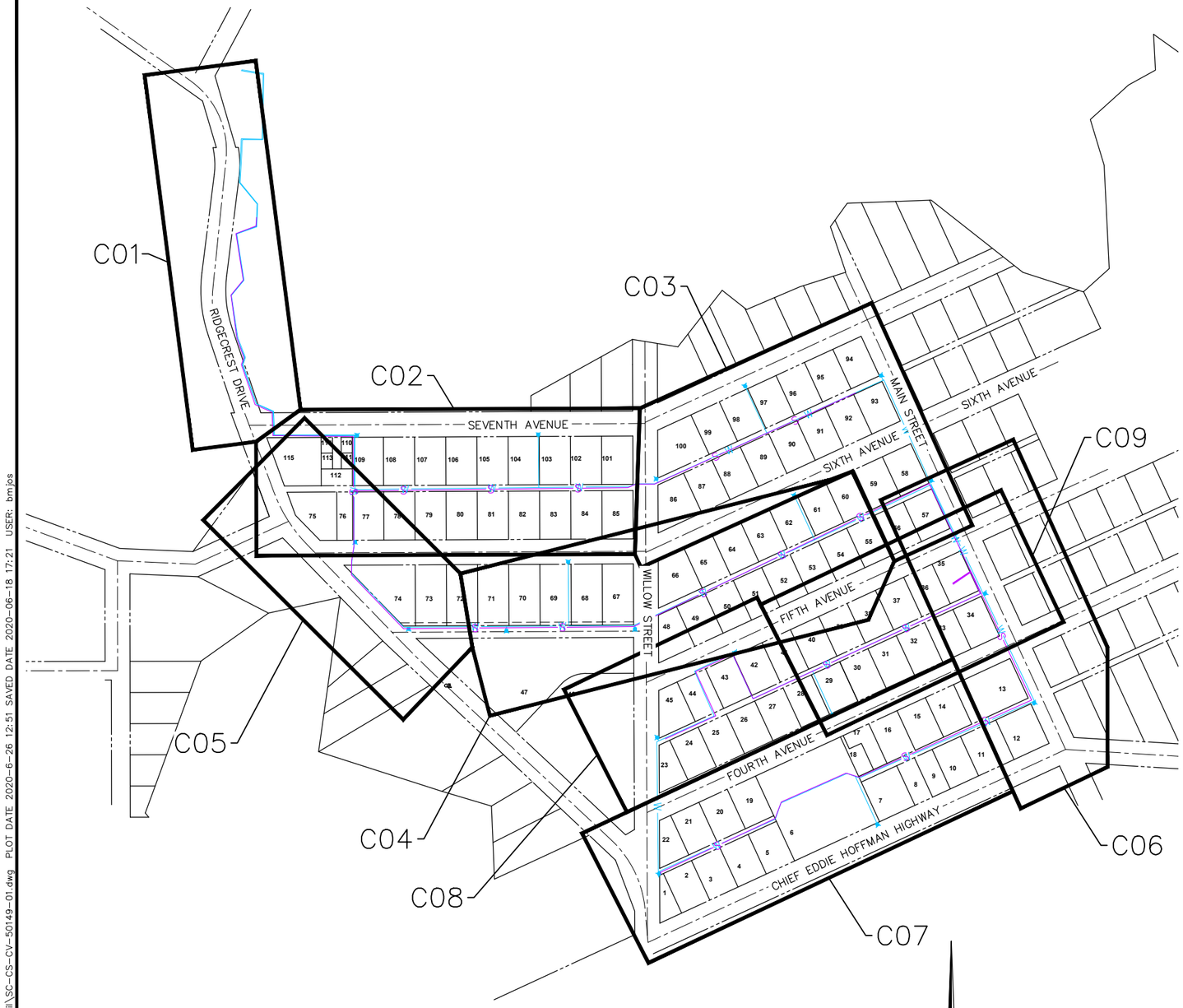

KEY MAP

200 0 200 400
SCALE IN FEET

LEGEND

EXISTING	PROPOSED	
		ASPHALT EDGE
		BUILDING
		CENTERLINE
C		COMMUNICATIONS LINE
		CULVERT / CASING PIPE
		ROW
		EASEMENT
OE		OVERHEAD ELECTRICAL LINE
		EXISTING GROUND (PROFILE)
X X		FENCE
FO		FIBER OPTIC
		FIRE HYDRANT
		GRAVEL EDGE
		LUMINAIRE
		THERMO PILES
		PIPE SUPPORTS
		POWER POLE WITH GUY WIRE
		PROPERTY LINE
S	S	SANITARY SEWER LINE
		SANITARY SEWER CLEANOUT
		SANITARY SEWER MANHOLE
		SIGN
		WATER BODY
W	W	WATER LINE
	W	WATER VAULT
		WATER AND SEWER SERVICE
		HELICAL PIER DRIVEN PILE
		BOLLARD
SD		CULVERT

ABBREVIATIONS

APPROX	APPROXIMATELY
CMP	CORRUGATED METAL PIPE
CITY	CITY OF BETHEL
COMM	COMMUNICATION
CY	CUBIC YARD
DI	DUCTILE IRON
DIA	DIAMETER
DTL	DETAIL
ELEV	ELEVATION
EX	EXISTING
FF	FINISHED FLOOR
FT	FEET
GPM	GALLONS PER MINUTE
GA	GAUGE
GHR	GLYCOL HEAT RETURN
GHS	GLYCOL HEAT SUPPLY
HDPE	HIGH DENSITY POLYETHYLENE
HP	HORSEPOWER
IPS	IRON PIPE SIZE
LF	LINEAR FEET
MAX	MAXIMUM
MH	MANHOLE
MIL	MILLIMETER
MIN	MINIMUM
NFS	NON-FROST SUSCEPTIBLE
NO	NUMBER
NTS	NOT TO SCALE
OC	ON CENTER
O.D.	OUTSIDE DIAMETER
PE	POLYETHYLENE
PSI	POUNDS PER SQUARE INCH
PUE	PUBLIC UTILITY EASEMENT
ROW	RIGHT OF WAY
SHT	SHEET
SIM	SIMILAR
SPECS	SPECIFICATIONS
SS	STAINLESS STEEL
STA	STATION
TCP	TEMPORARY CONSTRUCTION PERMIT
TYP.	TYPICAL
WTP	WATER TREATMENT PLANT

ESTIMATE OF QUANTITIES:

PROPOSED UTILITY	PROPOSED QUANTITIES
PIPE SUPPORTS	XX

GENERAL NOTES:

1. INFORMATION ON EXISTING UTILITIES AND BUILDINGS SHOWN ARE TAKEN FROM EXISTING RECORDS OR ESTIMATED BY OTHER MEANS AND ARE SHOWN FOR THE CONVENIENCE OF THE CONTRACTOR. LOCATIONS ARE APPROXIMATE ONLY.
2. COORDINATES SHOWN ARE APPROXIMATE.
3. CONTRACTOR SHALL REPLACE ALL FENCES REMOVED FOR THIS PROJECT.
4. SEWER SERVICES SHALL MAINTAIN A MINIMUM OF 2% SLOPE BETWEEN THE HOUSE AND GRINDER PUMP. FOR PARCELS WITH MULTIPLE SERVICE CONNECTIONS, IF 2% SLOPE CANNOT BE MAINTAINED TO A COMMON GRINDER PUMP, ANOTHER GRINDER PUMP SHALL BE INSTALLED.

35% SUBMITTAL

REVISIONS

REV	DATE	DESCRIPTION	BY

DOWL
WWW.DOWL.COM

BETHEL AVENUES PIPED WATER AND SEWER
BETHEL, ALASKA
KEY MAP, LEGEND, ABBREVIATIONS & NOTES

LEGAL DESCRIPTION
LOCATION

PROJECT 1529.50149.01
DATE 06/10/2020

© DOWL 2020

SHEET
G2

C:\Civil 3D Projects 2018\2018\29\50149-01\Civil\SC-CS-CV-50149-01.dwg PLOT DATE 2020-6-26 12:51 SAVED DATE 2020-06-18 17:21 USER: bmjos

NOTES:

1. THIS DRAWING IS SCHEMATIC AND IS PROVIDED TO GIVE THE CONTRACTOR INFORMATION REGARDING THE ROUTING OF THE SYSTEM PIPING. FOR PIPE LENGTHS AND DETAILS, CONTRACTOR SHALL REFERENCE THE PLAN AND PROFILE DRAWINGS.
2. CONTRACTOR SHALL DISPOSE OF FORCE MAIN OFFSITE IN ACCORDANCE WITH LOCAL, STATE, AND FEDERAL LAWS AT CONTRACTORS SOLE EXPENSE.

35% SUBMITTAL

REV	DATE	REVISIONS DESCRIPTION	BY

DOWL
WWW.DOWL.COM

BETHEL AVENUES PIPED WATER AND SEWER
BETHEL, ALASKA
SANITARY SEWER SYSTEM SCHEMATICS

LEGAL DESCRIPTION
LOCATION

PROJECT 1529.50149.01
DATE 06/10/2020

© DOWL 2020

SHEET
G3

C:\Civil 3D Projects 2018\2018\29\50149-01\Civil\SC-CU-SK-50149-01.dwg PLOT DATE 2020-6-19 15:14 SAVED DATE 2020-06-19 15:11 USER: keller

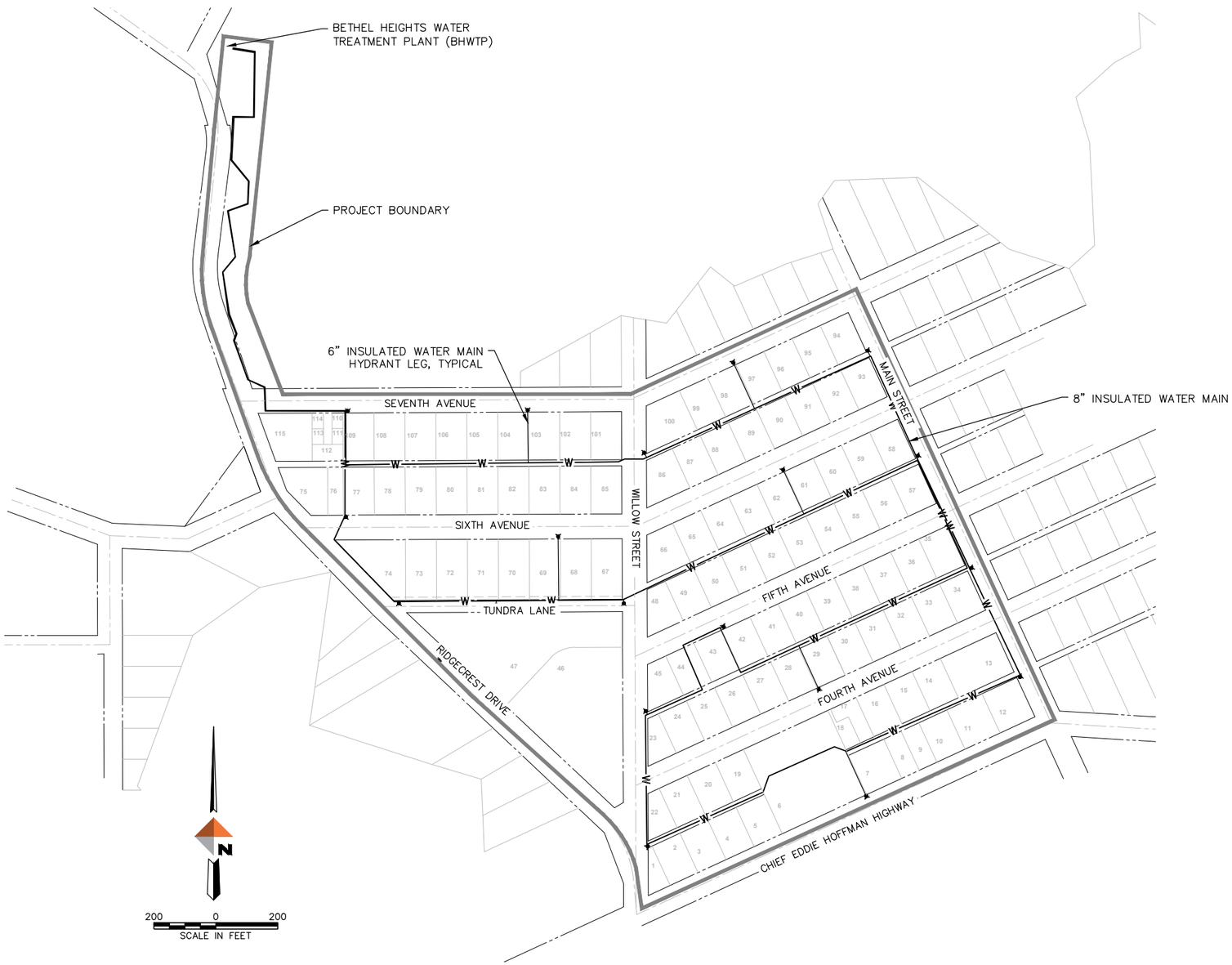

NOTES:

1. THIS DRAWING IS SCHEMATIC AND IS PROVIDED TO GIVE THE CONTRACTOR INFORMATION REGARDING THE ROUTING OF THE SYSTEM PIPING. FOR PIPE LENGTHS AND DETAILS, CONTRACTOR SHALL REFERENCE THE PLAN AND PROFILE DRAWINGS.

35% SUBMITTAL

REV	DATE	REVISIONS DESCRIPTION	BY

DOWL
WWW.DOWL.COM

BETHEL AVENUES PIPED WATER AND SEWER
BETHEL, ALASKA
WATER SYSTEM SCHEMATICS

LEGAL DESCRIPTION
LOCATION

PROJECT 1529.50149.01
DATE 06/10/2020

© DOWL 2020

SHEET
G4

C:\Civil 3D Projects 2018\2018\29\50149-01\Civil\SC-CU-SK-50149-01.dwg PLOT DATE 2020-6-19 15:15 SAVED DATE 2020-06-19 15:11 USER: keller

NOTES:

1. THIS DRAWING IS SCHEMATIC AND IS PROVIDED TO GIVE THE CONTRACTOR INFORMATION REGARDING THE ROUTING OF THE SYSTEM PIPING. FOR PIPE LENGTHS AND DETAILS, CONTRACTOR SHALL REFERENCE THE PLAN AND PROFILE DRAWINGS.

35% SUBMITTAL

REV	DATE	REVISIONS DESCRIPTION	BY

DOWL
WWW.DOWL.COM

BETHEL AVENUES PIPED WATER AND SEWER
BETHEL, ALASKA
GLYCOL SYSTEM SCHEMATICS

LEGAL DESCRIPTION
LOCATION

PROJECT 1529.50149.01
DATE 06/10/2020

© DOWL 2020

SHEET
G5

C:\Civil 3D Projects 2018\2018\29\50149-01\Civil\SC-CU-SK-50149-01.dwg PLOT DATE 2020-6-19 15:16 SAVED DATE 2020-06-19 15:11 USER: keller

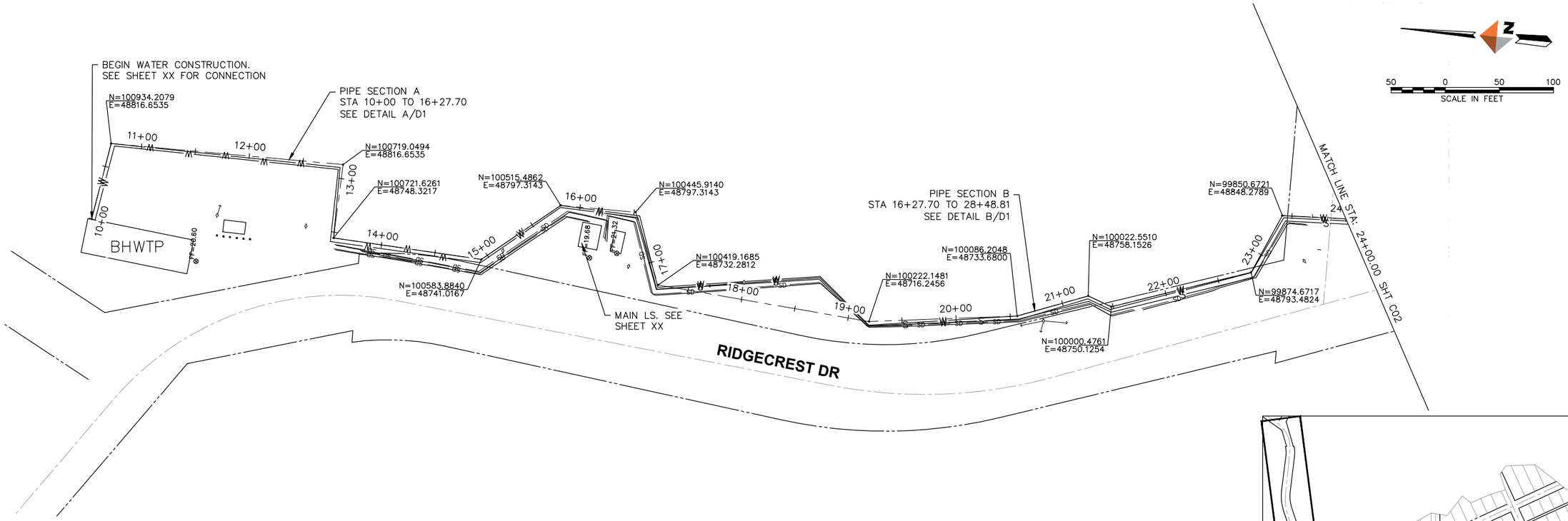

NOTES:

1. PIPE BEND COORDINATES REFERENCE THE CENTER OF PIPE GROUP.

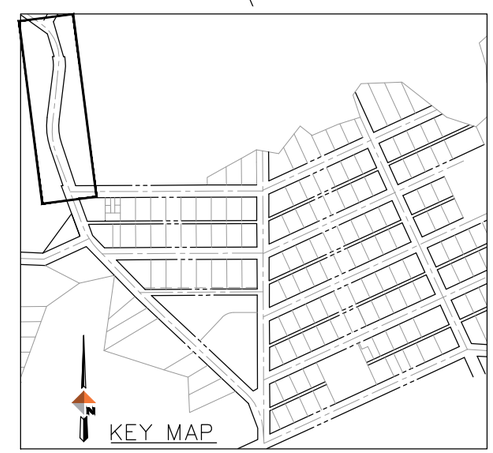

35% SUBMITTAL

REV	DATE	DESCRIPTION	BY

REVISIONS

DOWL
WWW.DOWL.COM

BETHEL AVENUES PIPED WATER AND SEWER
BETHEL, ALASKA
PLAN AND PROFILE

LEGAL DESCRIPTION
LOCATION

PROJECT 1529.50149.01
DATE 06/10/2020

© DOWL 2020

SHEET
C01

C:\Civil 3D Projects 2018\2018\29\50149-01\Civil\SC-CU-PP-50149-01.dwg PLOT DATE 2020-6-22 11:09 SAVED DATE 2020-06-22 11:03 USER: keller

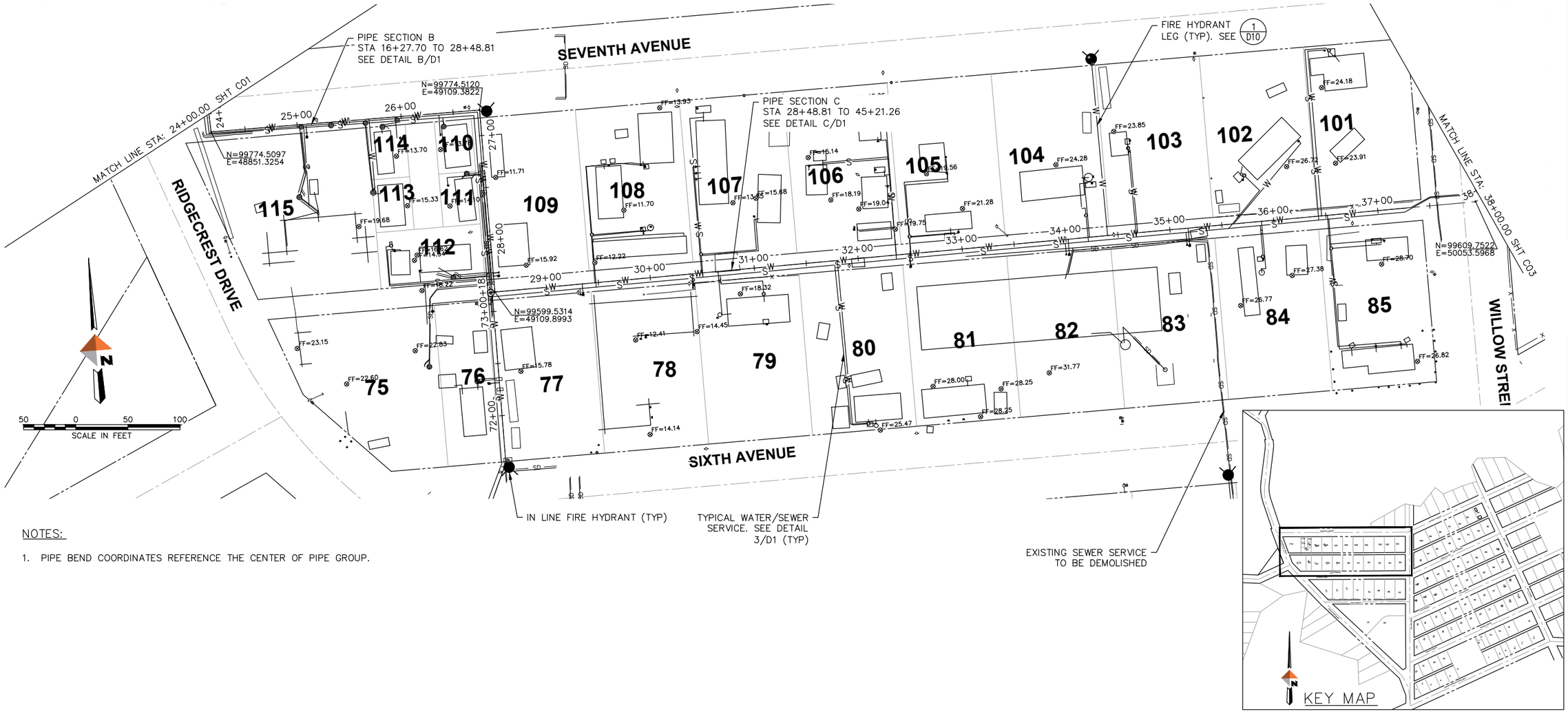

NOTES:

1. PIPE BEND COORDINATES REFERENCE THE CENTER OF PIPE GROUP.

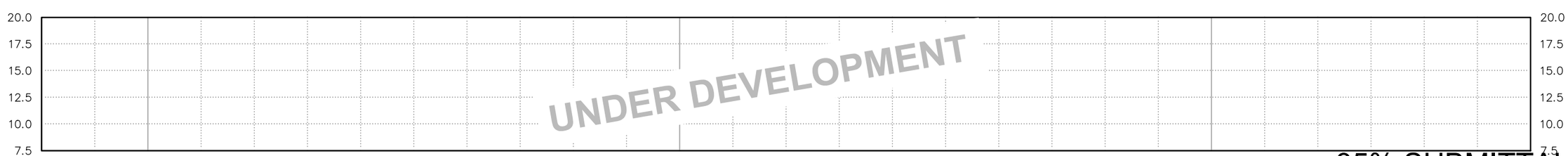

35% SUBMITTAL

REV	DATE	REVISIONS DESCRIPTION	BY

DOWL
WWW.DOWL.COM

BETHEL AVENUES PIPED WATER AND SEWER
BETHEL, ALASKA
PLAN AND PROFILE

LEGAL DESCRIPTION
LOCATION

PROJECT 1529.50149.01
DATE 06/10/2020

© DOWL 2020

SHEET
C02

C:\Civil 3D Projects 2018\2018\29\50149-01\Civil\SC-CU-PP-50149-01.dwg PLOT DATE 2020-6-22 11:10 SAVED DATE 2020-06-22 11:03 USER: keller

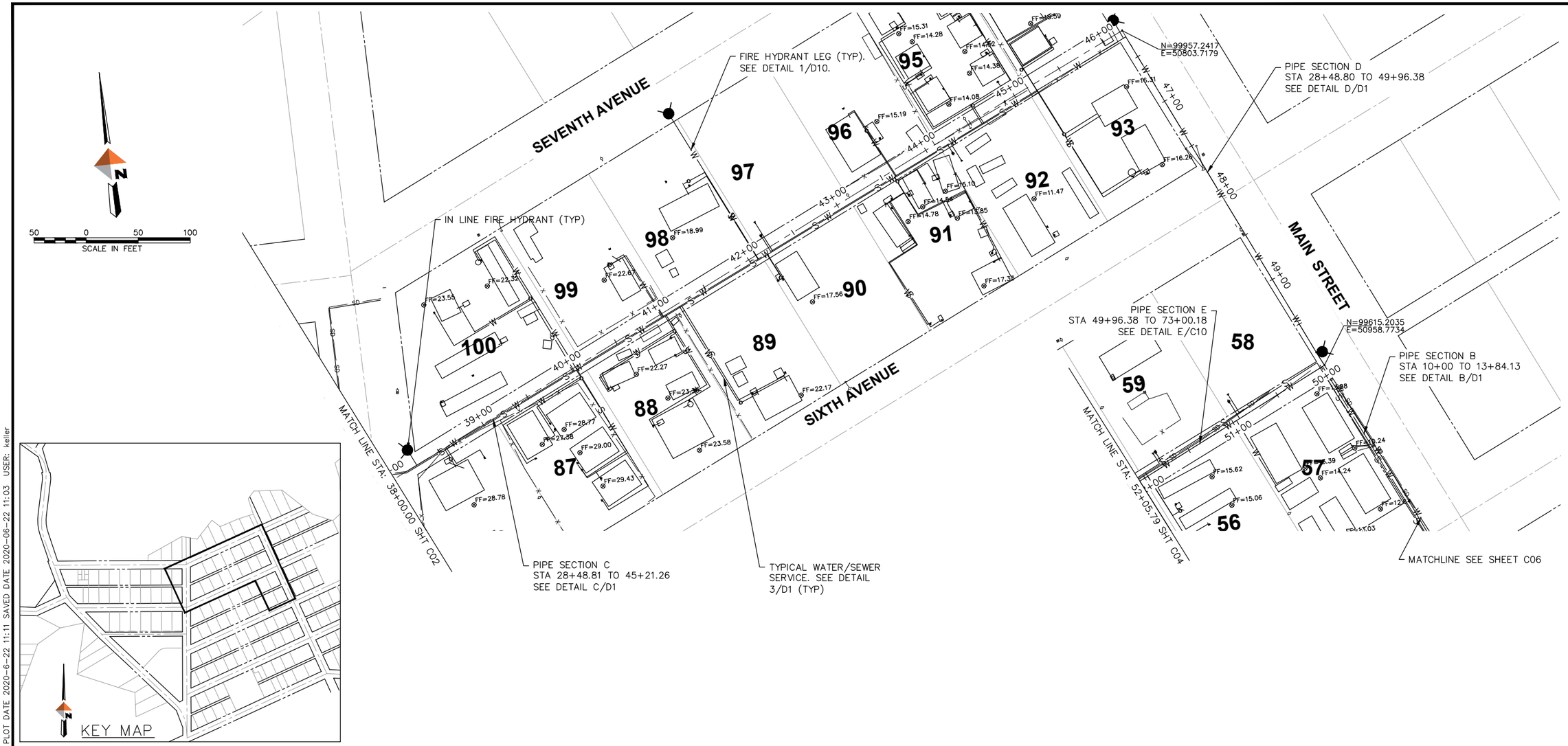

NOTES:

1. PIPE BEND COORDINATES REFERENCE THE CENTER OF PIPE GROUP.

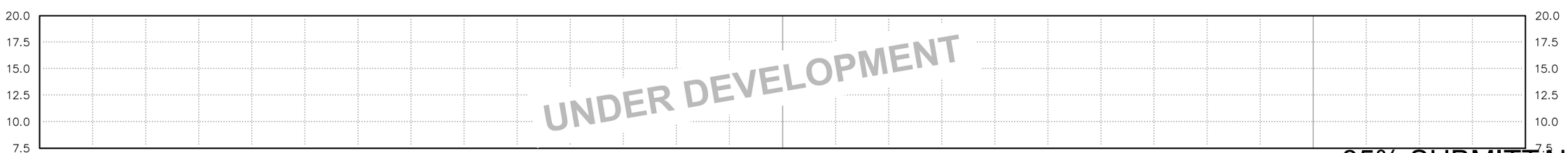

UNDER DEVELOPMENT

35% SUBMITTAL

REV	DATE	REVISIONS DESCRIPTION	BY

DOWL
WWW.DOWL.COM

BETHEL AVENUES PIPED WATER AND SEWER
BETHEL, ALASKA
PLAN AND PROFILE

LEGAL DESCRIPTION
LOCATION

PROJECT 1529.50149.01
DATE 06/10/2020

© DOWL 2020

SHEET
C03

c:\Civil 3D Projects 2018\2018\29\50149-01\Civil\SC-CU-PP-50149-01.dwg PLOT DATE 2020-6-22 11:11 SAVED DATE 2020-06-22 11:03 USER: keller

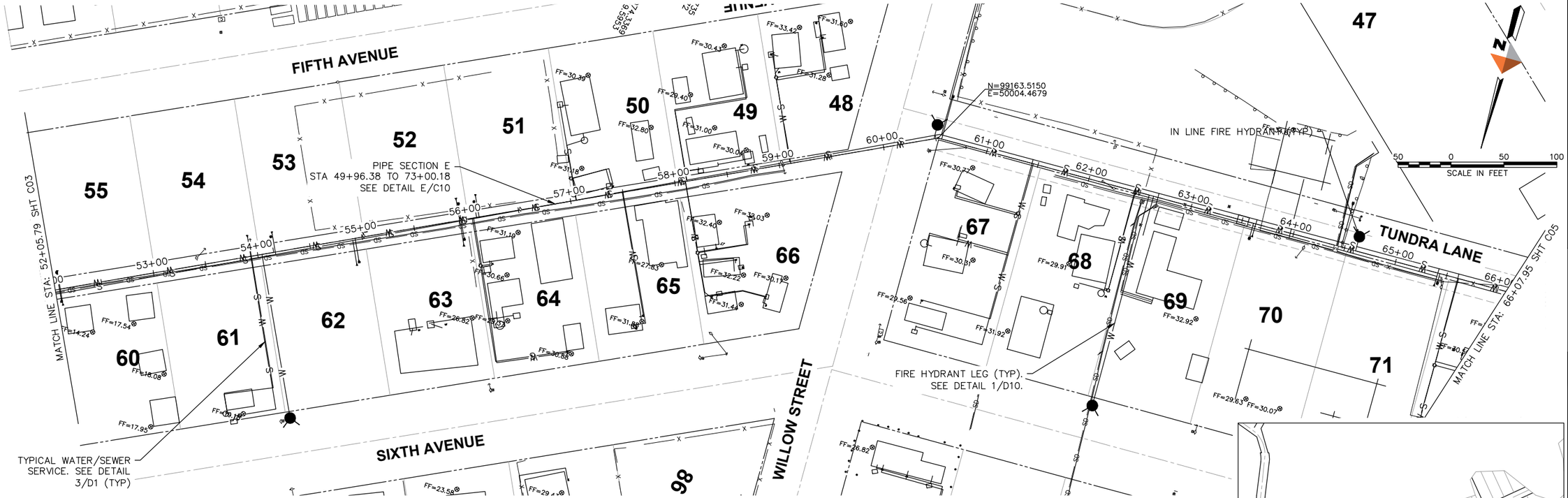

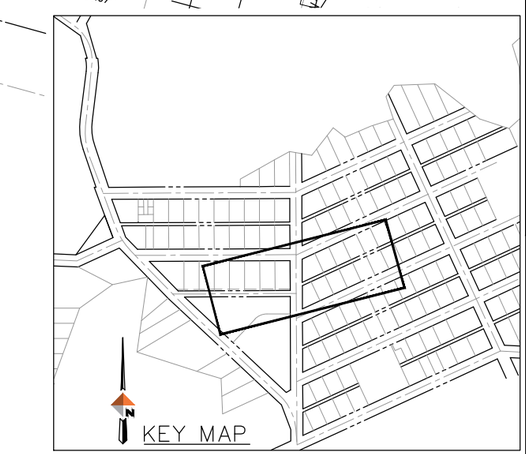

NOTES:

1. PIPE BEND COORDINATES REFERENCE THE CENTER OF PIPE GROUP.

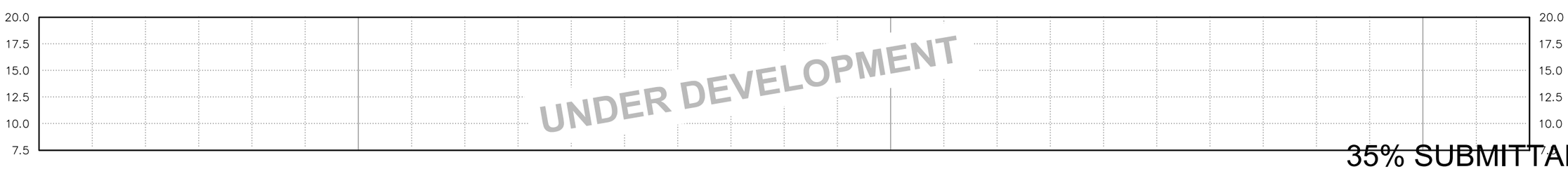

UNDER DEVELOPMENT

35% SUBMITTAL

REV	DATE	REVISIONS DESCRIPTION	BY

DOWL
WWW.DOWL.COM

BETHEL AVENUES PIPED WATER AND SEWER
BETHEL, ALASKA
PLAN AND PROFILE

LEGAL DESCRIPTION
LOCATION

PROJECT 1529.50149.01
DATE 06/10/2020

© DOWL 2020

SHEET
C04

C:\Civil 3D Projects 2018\2018\29\50149-01\Civil\SC-CU-PP-50149-01.dwg PLOT DATE 2020-6-22 11:12 SAVED DATE 2020-06-22 11:03 USER: keller

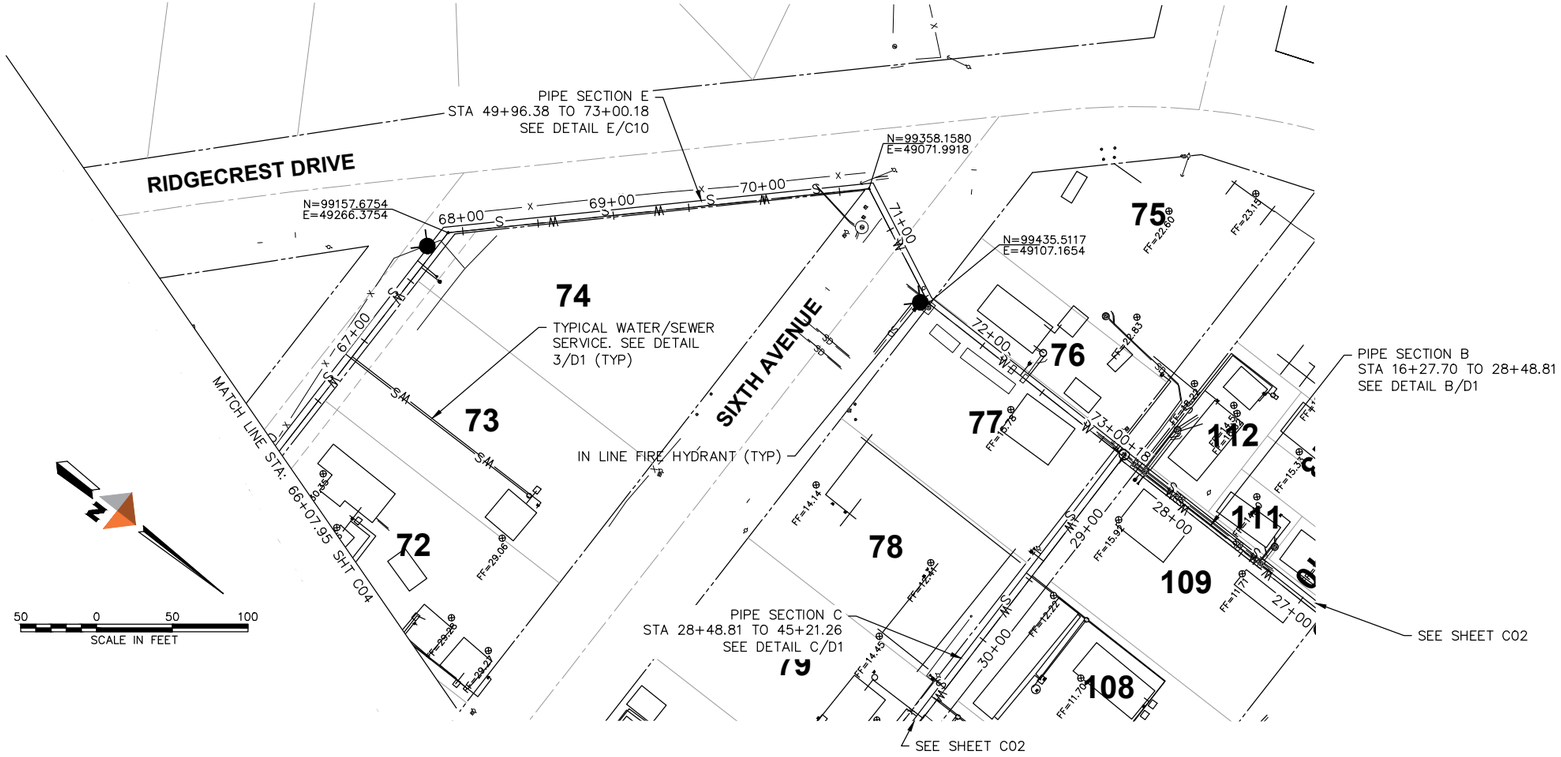

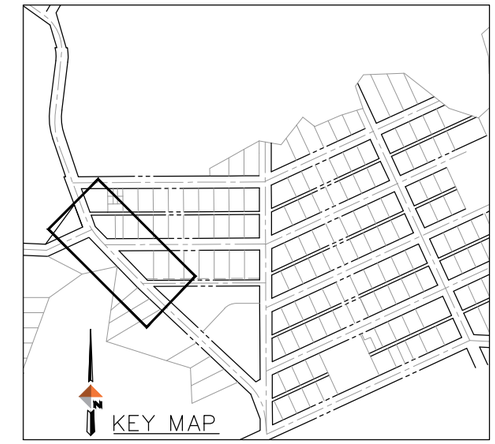

NOTES:

1. PIPE BEND COORDINATES REFERENCE THE CENTER OF PIPE GROUP.

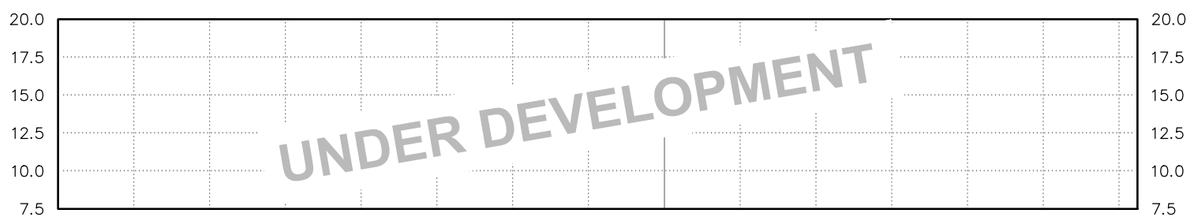

35% SUBMITTAL

REV	DATE	REVISIONS DESCRIPTION	BY

DOWL
WWW.DOWL.COM

BETHEL AVENUES PIPED WATER AND SEWER
BETHEL, ALASKA
PLAN AND PROFILE

LEGAL DESCRIPTION
LOCATION

PROJECT 1529.50149.01
DATE 06/10/2020

© DOWL 2020

SHEET
C05

C:\Civil 3D Projects 2018\2018\29\50149-01\Civil\SC-CU-PP-50149-01.dwg PLOT DATE 2020-6-22 11:13 SAVED DATE 2020-06-22 11:03 USER: keller

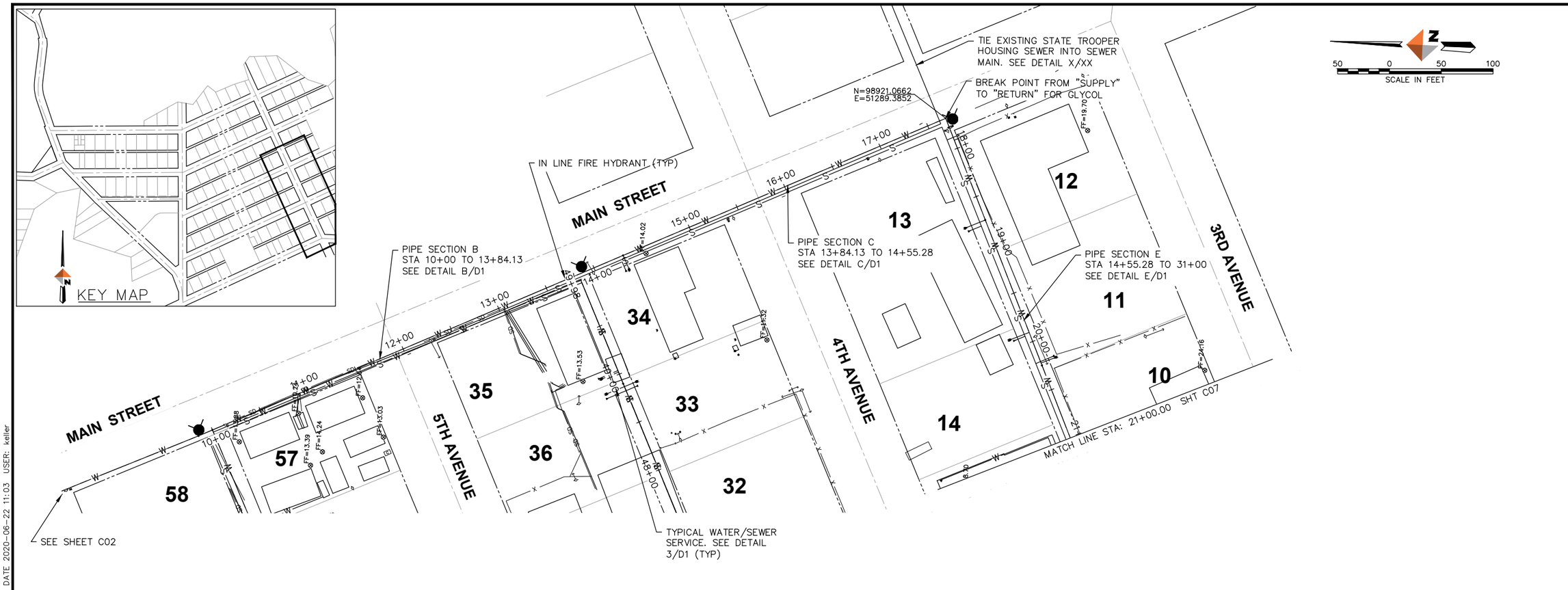

NOTES:

1. PIPE BEND COORDINATES REFERENCE THE CENTER OF PIPE GROUP.

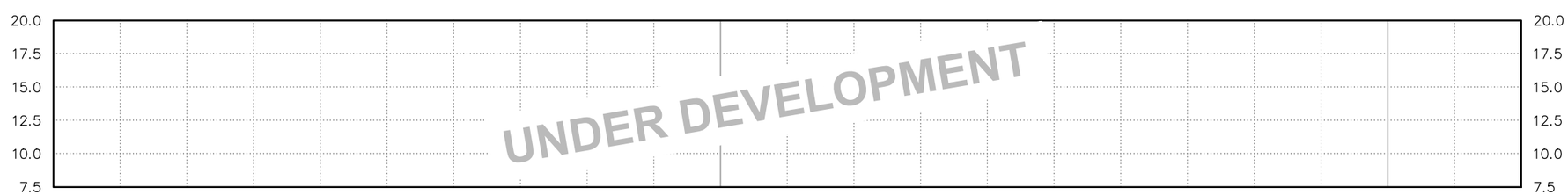

35% SUBMITTAL

REVISIONS

REV	DATE	DESCRIPTION	BY

BETHEL AVENUES PIPED WATER AND SEWER
BETHEL, ALASKA
PLAN AND PROFILE

LEGAL DESCRIPTION
LOCATION

DOWL
WWW.DOWL.COM

PROJECT 1529.50149.01
DATE 06/10/2020

© DOWL 2020

SHEET
C06

C:\Civil 3D Projects 2018\2018\29\50149-01\Civil\SC-CU-PP-50149-01.dwg PLOT DATE 2020-6-22 11:14 SAVED DATE 2020-06-22 11:03 USER: keller

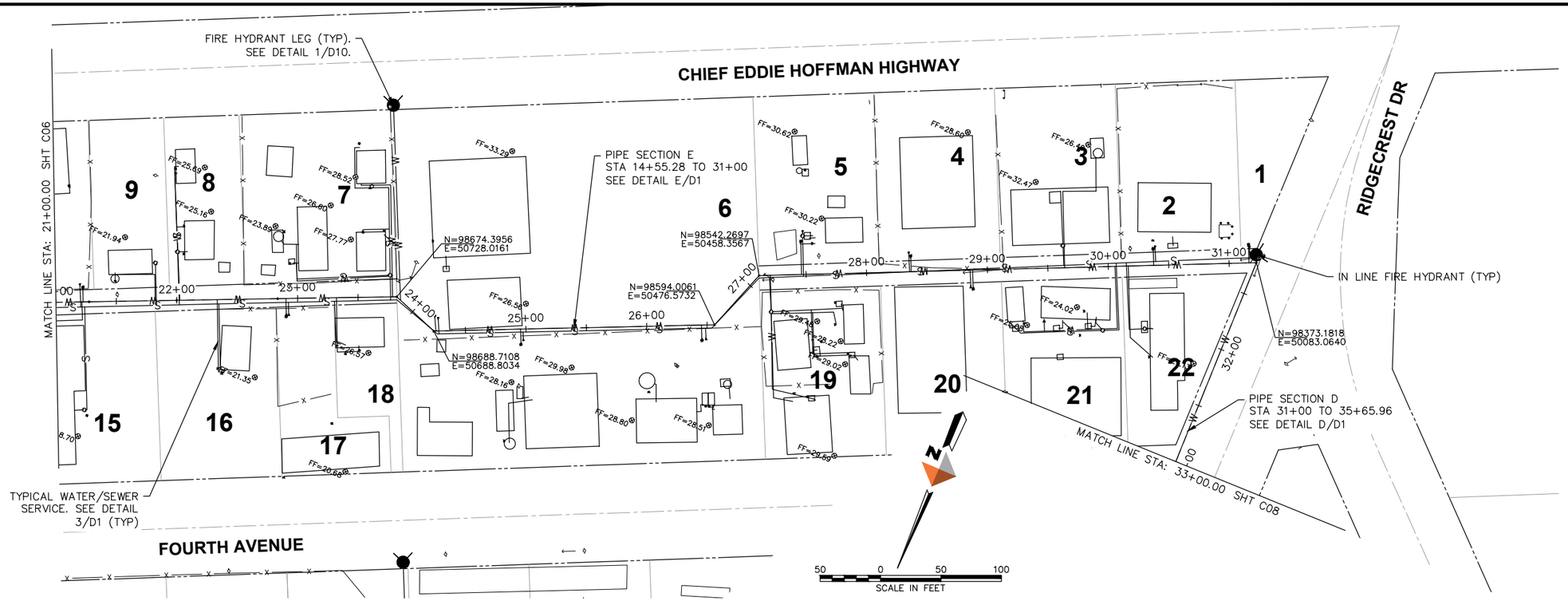

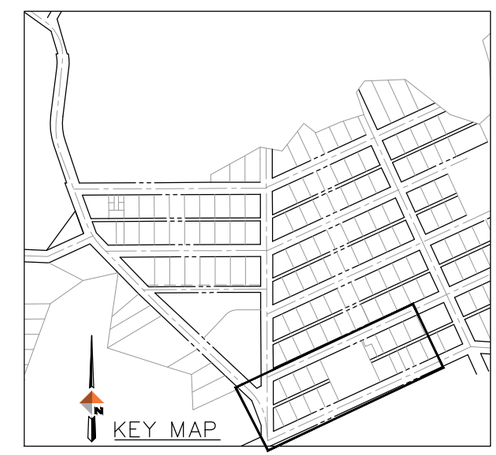

NOTES:

1. PIPE BEND COORDINATES REFERENCE THE CENTER OF PIPE GROUP.

35% SUBMITTAL

REV	DATE	REVISIONS DESCRIPTION	BY

DOWL
WWW.DOWL.COM

BETHEL AVENUES PIPED WATER AND SEWER
BETHEL, ALASKA
PLAN AND PROFILE

LEGAL DESCRIPTION
LOCATION

PROJECT 1529.50149.01
DATE 06/10/2020

© DOWL 2020

SHEET
C07

C:\Civil 3D Projects 2018\2018\29\50149-01\Civil\SC-CU-PP-50149-01.dwg PLOT DATE 2020-6-22 11:14 SAVED DATE 2020-06-22 11:03 USER: keller

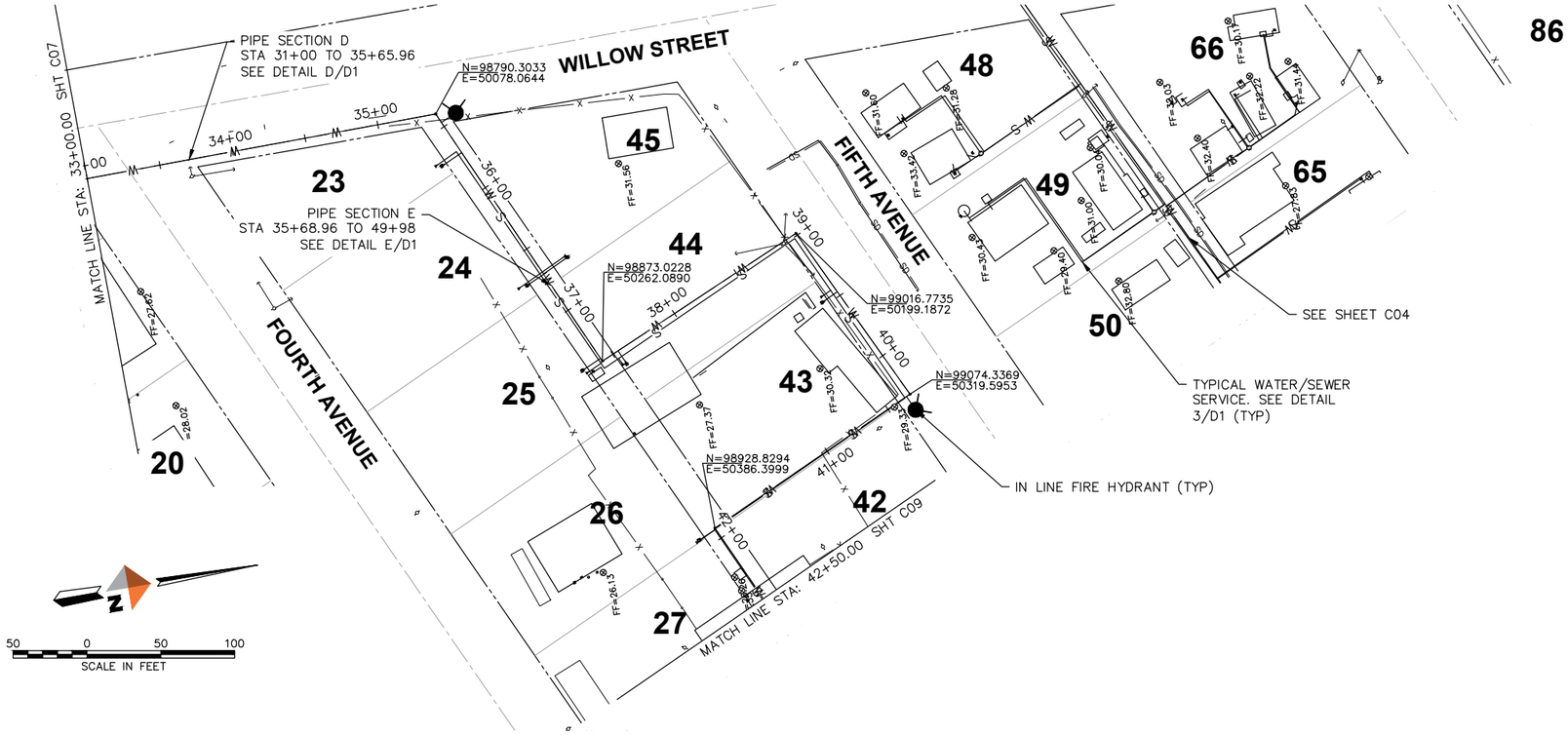

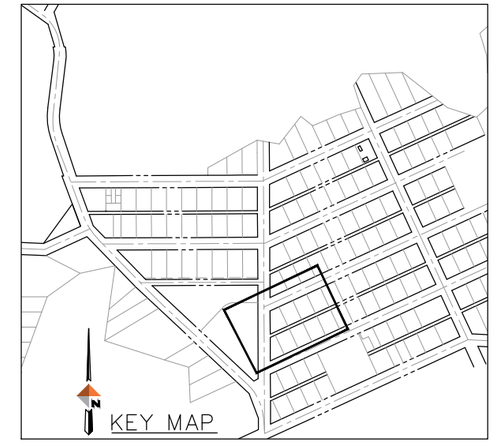

NOTES:

1. PIPE BEND COORDINATES REFERENCE THE CENTER OF PIPE GROUP.

35% SUBMITTAL

REV	DATE	REVISIONS DESCRIPTION	BY

BETHEL AVENUES PIPED WATER AND SEWER
BETHEL, ALASKA
PLAN AND PROFILE

LEGAL DESCRIPTION
LOCATION

PROJECT 1529.50149.01
DATE 06/10/2020

© DOWL 2020

SHEET
C08

C:\Civil 3D Projects 2018\2018\29\50149-01\Civil\SC-CU-PP-50149-01.dwg PLOT DATE 2020-6-22 11:15 SAVED DATE 2020-06-22 11:03 USER: keller

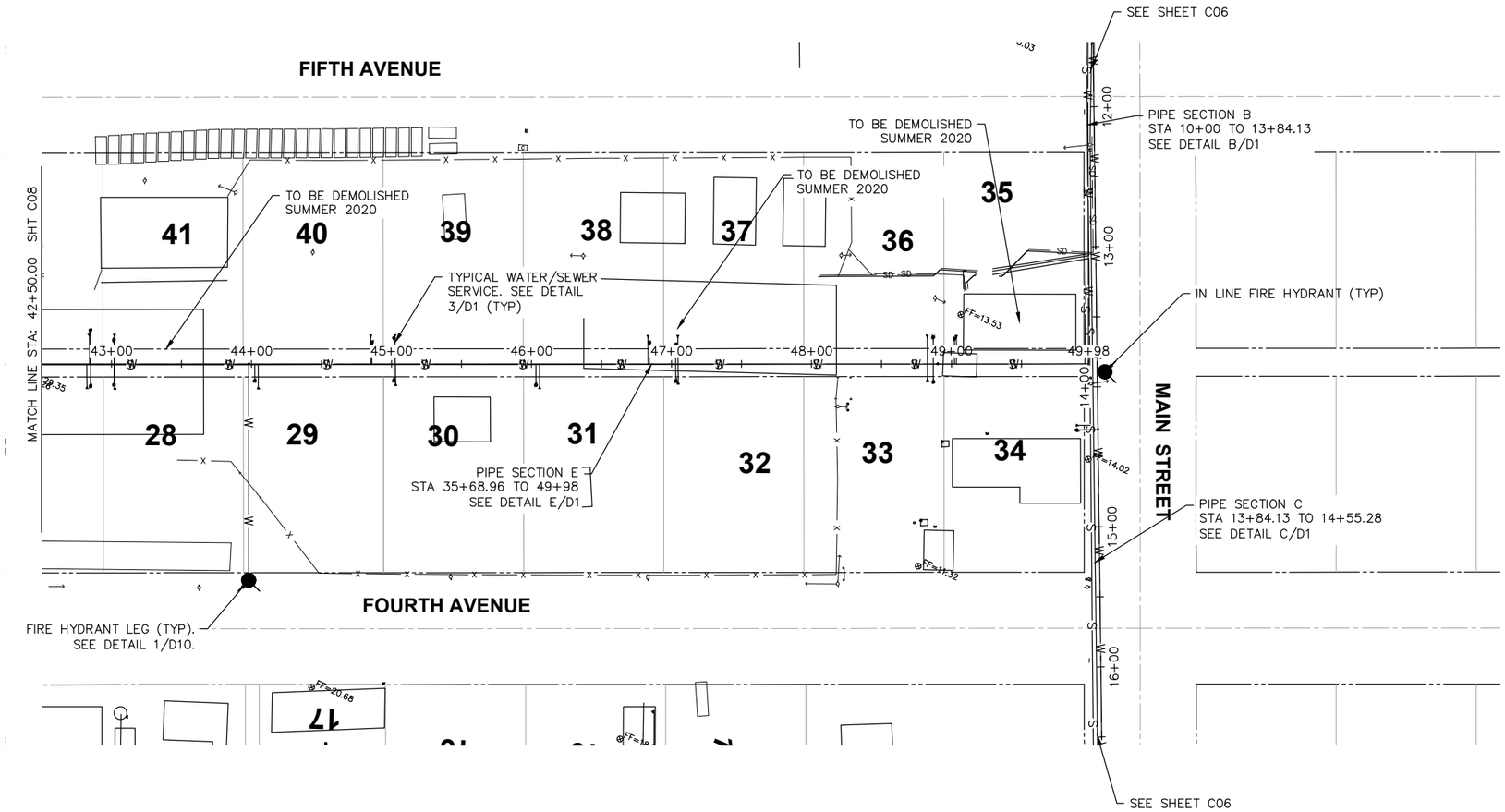

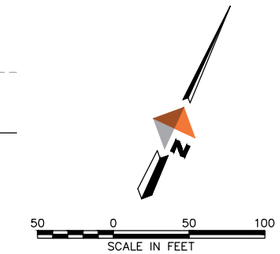

NOTES:

1. PIPE BEND COORDINATES REFERENCE THE CENTER OF PIPE GROUP.

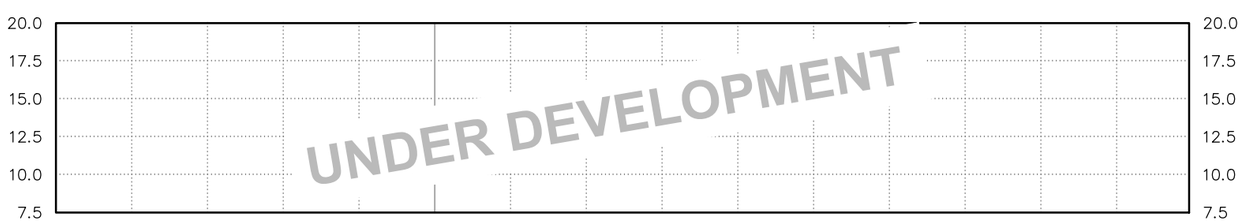

35% SUBMITTAL

REV	DATE	REVISIONS DESCRIPTION	BY

BETHEL AVENUES PIPED WATER AND SEWER
BETHEL, ALASKA
PLAN AND PROFILE

LEGAL DESCRIPTION
LOCATION

DOWL
WWW.DOWL.COM

PROJECT 1529.50149.01
DATE 06/10/2020

© DOWL 2020

SHEET
C09

C:\Civil 3D Projects 2018\2018\29\50149-01\Civil\SC-CU-PP-50149-01.dwg PLOT DATE 2020-6-22 11:16 SAVED DATE 2020-06-22 11:03 USER: keller

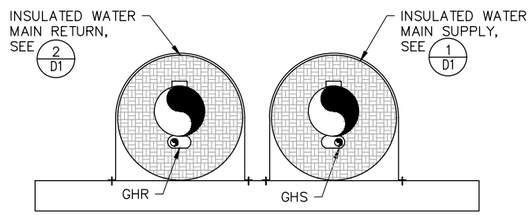

A D1 PIPE SECTION A
STA "A" 10+00 TO 16+27.70

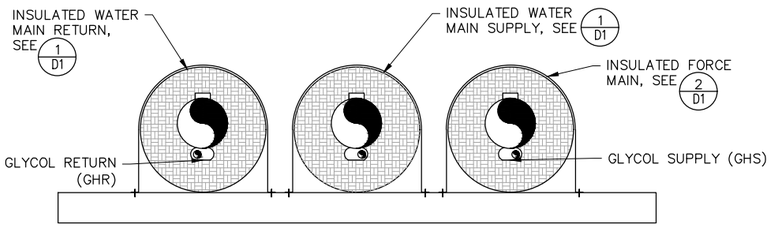

B D1 PIPE SECTION B
STA "A" 16+27.70 TO 28+48.81
STA "B" 10+00 TO 13+84.13

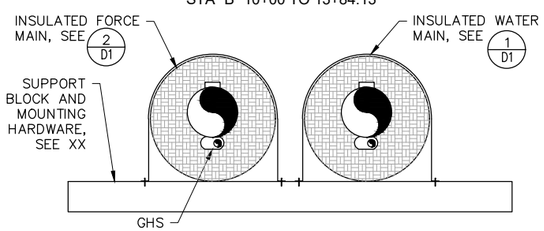

C D1 PIPE SECTION C
STA "A" 28+48.81 TO 45+21.26
STA "B" 13+84.13 TO 14+55.28

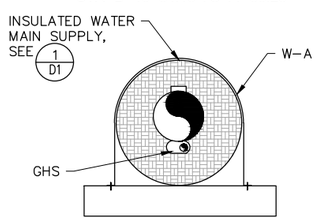

D D1 PIPE SECTION D
STA "A" 28+48.81 TO 49+96.38
STA "B" 31+00 TO 35+68.96

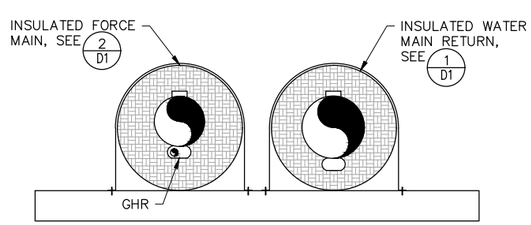

E D1 PIPE SECTION E
STA "A" 49+96.38 TO 73+00.18
STA "B" 14+55.28 TO 31+00
35+68.96 TO 49+98

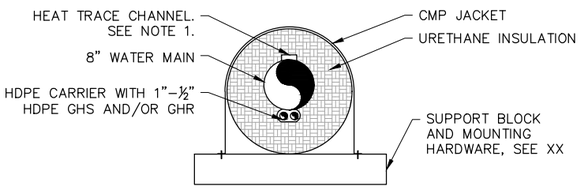

1 D1 WATER MAIN DETAIL
NTS

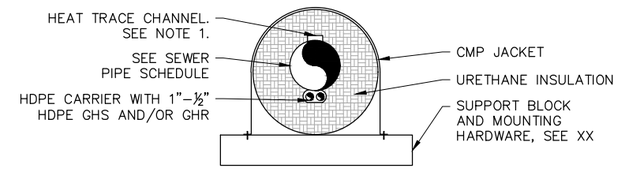

2 D1 SANITARY SEWER MAIN DETAIL
NTS

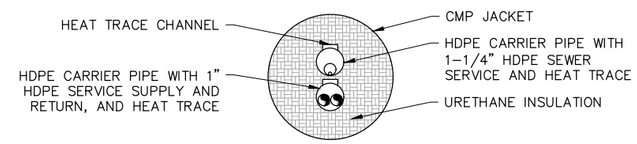

3 D1 SERVICE DETAIL
NTS

SEWER PIPE SCHEDULE

STATION	PIPE SIZE	SHEET NO.
28+48.81 TO 45+21.26	4 IN	C02, C03
14+55.28 TO 31+00	4 IN	C06, C07
35+68.96 TO 49+98	4 IN	C08, C09
LOOP A 16+27.70 TO 28+48.81	6 IN	C01, C02
LOOP A 49+96.38 TO 73+00.18	6 IN	C03, C04, C05
LOOP B 10+00 TO 14+55.28	6 IN	C06

NOTE1:
HEAT TRACE NOT PROVIDED. PROVIDE ⅜" POLY PROPYLENE PULL PIPE IN CHANNEL.

35% SUBMITTAL

REVISIONS

REV	DATE	DESCRIPTION	BY

DOWL
WWW.DOWL.COM

BETHEL AVENUES PIPED WATER AND SEWER
BETHEL, ALASKA
PIPE SECTIONS

LEGAL DESCRIPTION
LOCATION

PROJECT 1529.50149.01
DATE 06/10/2020

© DOWL 2020

SHEET
D1

C:\Civil 3D Projects 2018\2018\29\50149-01\Civil\SC-CU-PP-50149-01.dwg PLOT DATE 2020-6-22 11:17 SAVED DATE 2020-06-22 11:03 USER: keller

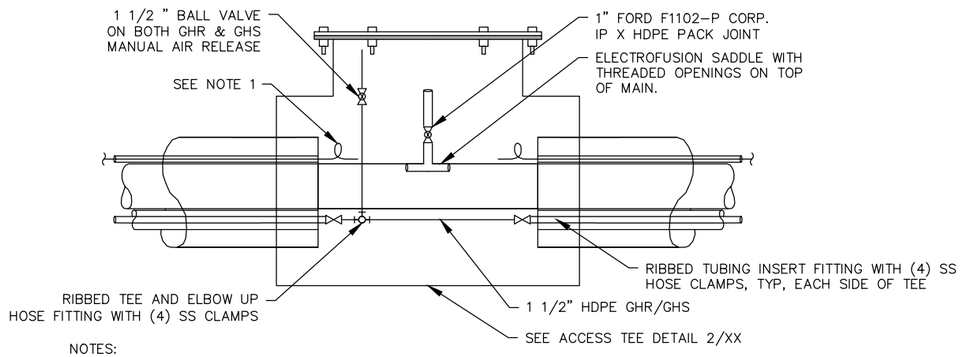

NOTES:
1. TERMINATE HEAT TRACE CHANNEL, EXTEND HEAT TRACE PULL ROPE 2' INSIDE ACCESS TEE AREA. PULL ROPES WILL RUN IN HEAT TRACE CONDUIT BETWEEN AIR RELEASE VALVES AND SERVICE BOXES.
2. PROVIDE 3" MINIMUM INSULATION ON REMOVABLE COVER PLATE AND WALLS OF ACCESS TEE. PROVIDE OPEN SPACE ACCESS FOR OPERATION AND MAINTENANCE OF THE AIR RELEASE.
3. INSTALL AIR RELEASE AT ALL HIGH POINTS OF PIPELINE. AIR RELEASE VALVES ARE SHOWN AT HIGH POINTS IN PLAN AND PROFILES. IF THERE ARE DISCREPANCIES, COORDINATE WITH RESIDENT PROJECT REPRESENTATIVE.

1 / D2 TYPICAL WATER OR SEWER MAIN AND GLYCOL SYSTEM AIR RELEASE
NTS

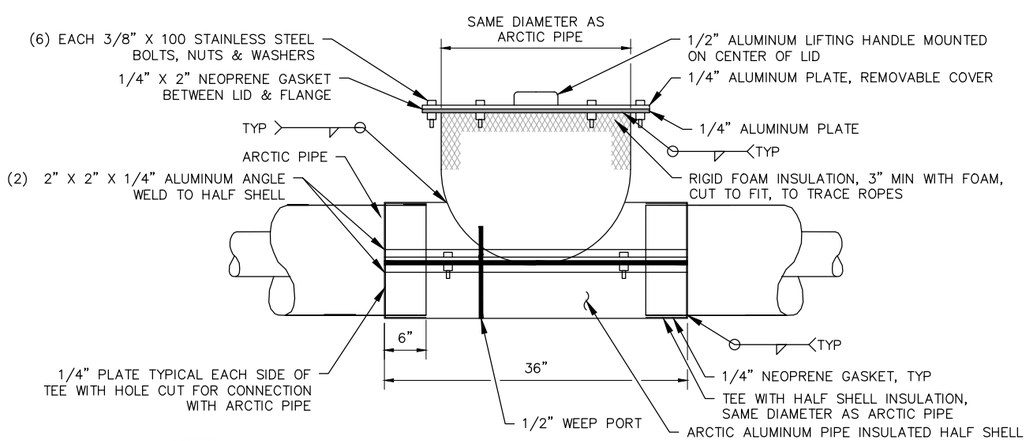

NOTES:
1. ACCESS TEE SHALL BE WEATHER PROOF AND PLACED OVER AIR RELEASE VALVES, CHECK VALVES AND PLUG VALVES. STENCIL NAME OR TYPE OF VALVE OR PORT ON ACCESS TEE COVER. ACCESS TEES SHALL BE PLACED ON TIMBER SUPPORTS TO CREATE A LOCALIZED HIGH POINT.
2. ACCESS TEES SHALL BE CONSTRUCTED ON TIMBER SUPPORTS. GRAVEL SHALL BE USED FOR LEVELING AS NECESSARY.

2 / D2 ACCESS TEE DETAIL
NTS

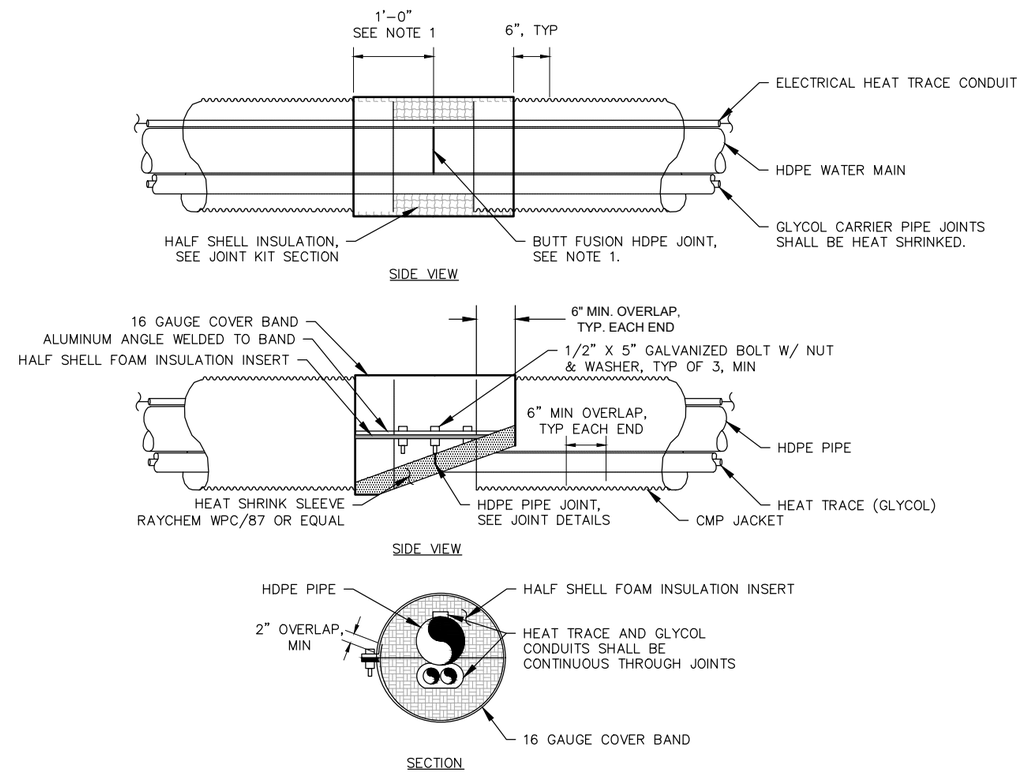

NOTES:
1. PROVIDE 12" MINIMUM HDPE PIPE EXTENSION BEYOND EACH ARCTIC PIPE SECTION FOR BUTT FUSION OR ELECTROFUSION JOINT, TYP, EACH END OF ARCTIC PIPE SECTION. ELECTROFUSION COUPLINGS SHALL ONLY BE ALLOWED ON A CASE BY CASE BASIS, UPON APPROVAL BY ENGINEER.
2. REMOVE BEAD AT FUSE JOINT PRIOR TO PLACEMENT OF HALF SHELLS.

4 / D2 TYPICAL JOINT KIT (HALF SHELL) DETAIL
NTS

35% SUBMITTAL

REV	DATE	REVISIONS DESCRIPTION	BY

DOWL
WWW.DOWL.COM

BETHEL AVENUES PIPED WATER AND SEWER
BETHEL, ALASKA
JOINTS

LEGAL DESCRIPTION
LOCATION

PROJECT 1529.50149.01
DATE 06/10/2020

© DOWL 2020

SHEET
D2

C:\Civil 3D Projects 2018\2018\29\50149-01\Civil\SC-CU-DT-50149-01.dwg PLOT DATE 2020-6-22 14:58 SAVED DATE 2020-06-22 14:45 USER: bmjps

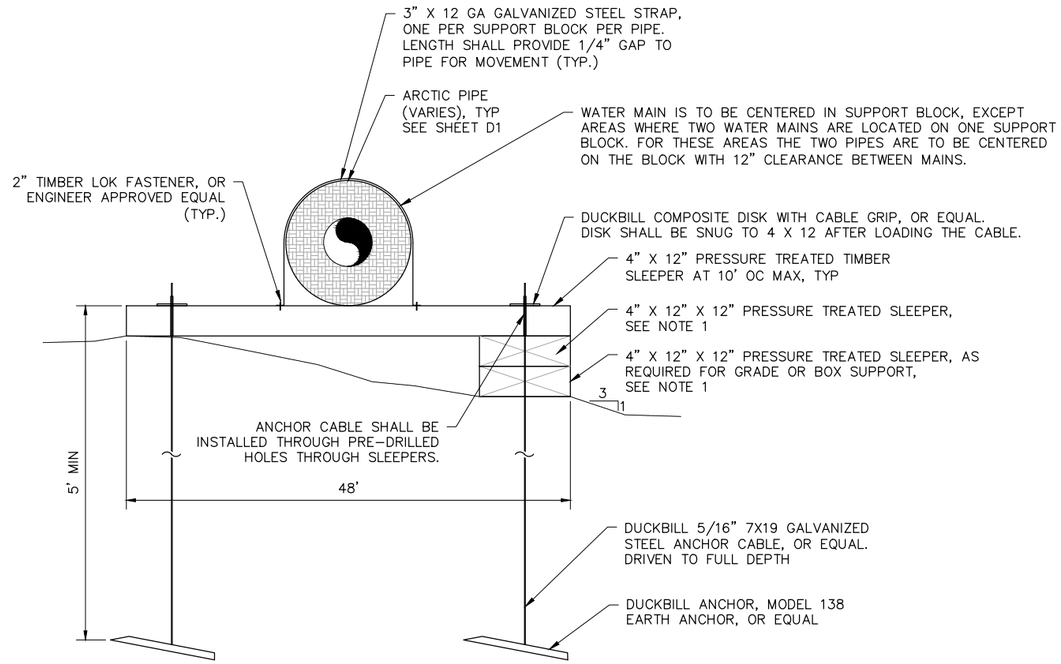

2 / D3 SUPPORT BLOCK DETAILS
NTS

SUPPORT BLOCK AND PIER ANCHOR NOTES

1. AT THE CONTRACTOR'S OPTION, THE TOP 4"x12" PRESSURE TREATED TIMBER MAY BE PLACED ON IMPORTED GRAVEL WITH A 3:1 SLOPE ON GEOTEXTILE FABRIC, IN LIEU OF ADDITIONAL PRESSURE TREATED TIMBER SLEEPERS. PRESSURE TREATED TIMBER SLEEPERS MUST BE SECURED WITH A ANCHOR AS SHOWN IN DETAIL 2/D1.
2. IF PERMAFROST IS ENCOUNTERED, THE PIER ANCHOR SHALL BE ADVANCED TO 2' MINIMUM BELOW THE TOP OF THE PERMAFROST. (NOTE: IF BURY DEPTH IS LESS THAN 8 FT NOTIFY THE ENGINEER.) WHEN UNFROZEN SOIL IS PRESENT, THE HELIX SHALL BE INSTALLED TO A MINIMUM DEPTH OF 15' AND A TORQUE OF 1,500 FOOT POUNDS. A TORQUE METER SHALL BE PROVIDED BY THE CONTRACTOR AND USED TO MONITOR EACH PIPE INSTALLATION. OWNER'S REPRESENTATIVE APPROVAL IS REQUIRED FOR ALL INSTALLATIONS.
3. INSTALL SUPPORTS BLOCKS EVERY 10 FEET IN THE LOCATIONS STATED IN THE PIPE SUPPORT SCHEDULE.
4. INSTALL PIER ANCHORS EVERY 10 FEET, IN THE LOCATIONS STATED IN THE PIPE SUPPORT SCHEDULE.
5. ALL METAL PARTS AND FASTENERS SHALL BE HOT DIPPED GALVANIZED. FIELD CUTS SHALL BE FIELD-TREATED WITH AN APPROVED COLD GALVANIZED PRODUCT.
6. DRIVEN 6" DIAMETER STEEL PILES (MIN. CLASS 40 WALL THICKNESS) MAY BE SUBSTITUTED FOR HELICAL PIERS. THE PILES MUST BE DRIVEN TO A MINIMUM DEPTH OF 20 FEET WITH AN ADJUSTABLE PIPE SUPPORT AS SHOWN IN DETAIL 1/D2. PRE-DRILLING MAY BE NECESSARY TO AVOID DAMAGE TO THE PILES.
7. FOR PIPE PROFILE NOTE, SEE PLAN SHEETS.
8. SUPPORT BLOCKS SHALL BE PLACED BENEATH EACH BEND.

UNDER DEVELOPMENT

PIPE SUPPORT SCHEDULE

SUPPORT SYSTEM	BEGINING STATIONING		
SUPPORT BLOCKS			
PIER ANCHORS			
PIER ANCH			
SUPP			
PIER A. ORS			
SUPPORT BLOCKS			

UNDER DEVELOPMENT

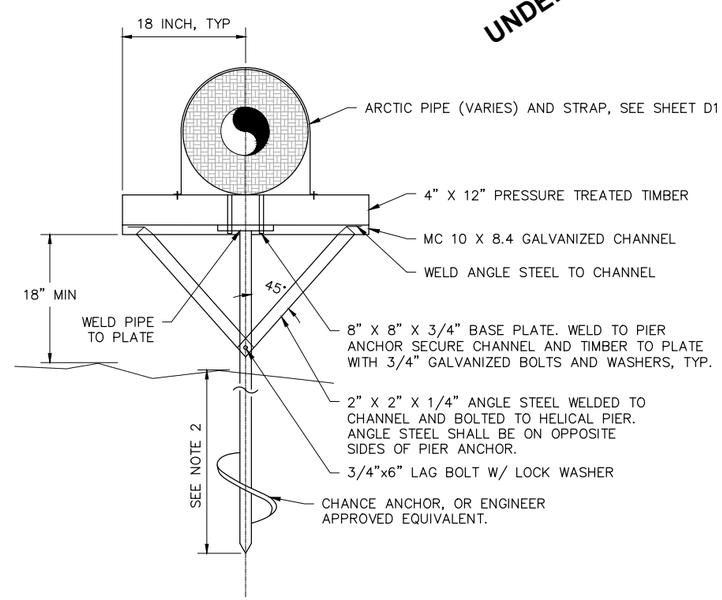

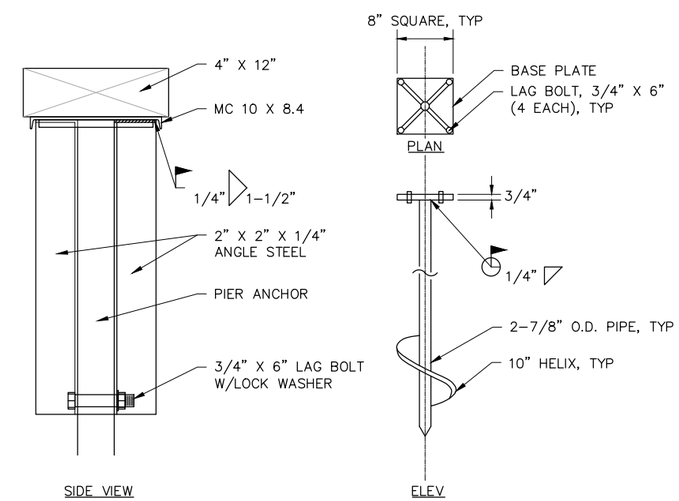

3 / D3 PIER (CHANCE) ANCHOR DETAIL
NTS

35% SUBMITTAL

REVISIONS

REV	DATE	DESCRIPTION	BY

DOWL
WWW.DOWL.COM

BETHEL AVENUES PIPED WATER AND SEWER
BETHEL, ALASKA
PIPE SUPPORTS

LEGAL DESCRIPTION
LOCATION

PROJECT 1529.50149.01
DATE 06/10/2020

© DOWL 2020

SHEET
D3

C:\Civil 3D Projects 2018\2018\29\50149-01\Civil\SC-CU-DT-50149-01.dwg PLOT DATE 2020-6-22 14:58 SAVED DATE 2020-06-22 14:45 USER: bmjps

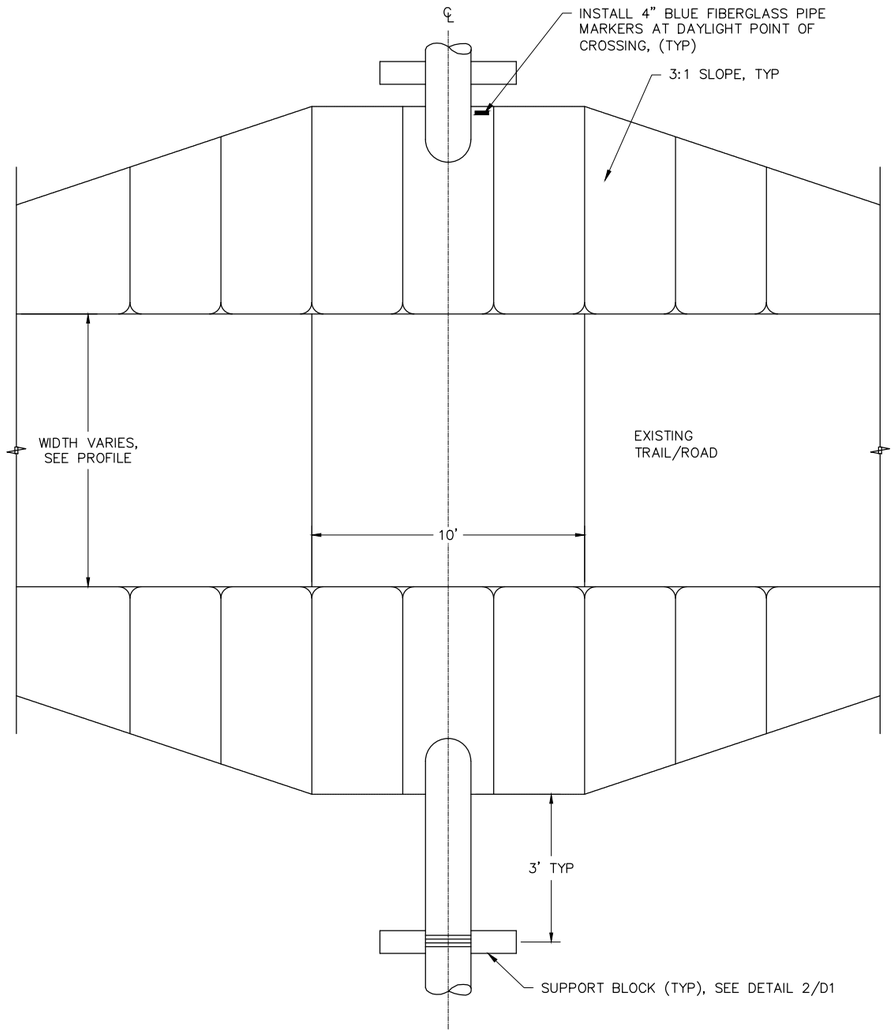

PLAN VIEW

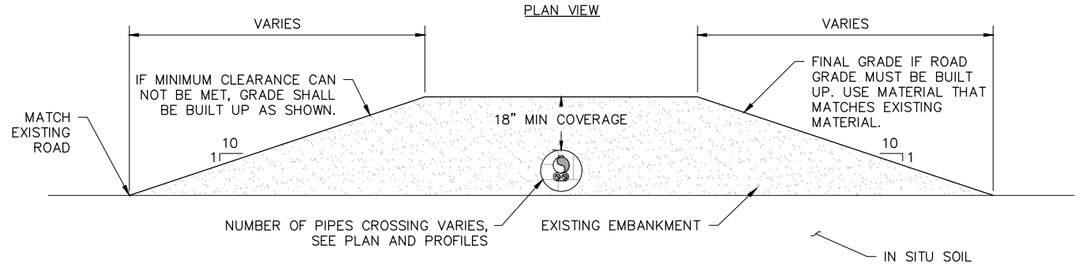

SECTION

1 / D4 TYPICAL DIRECT BURY CROSSING (DRIVEWAYS)
NTS

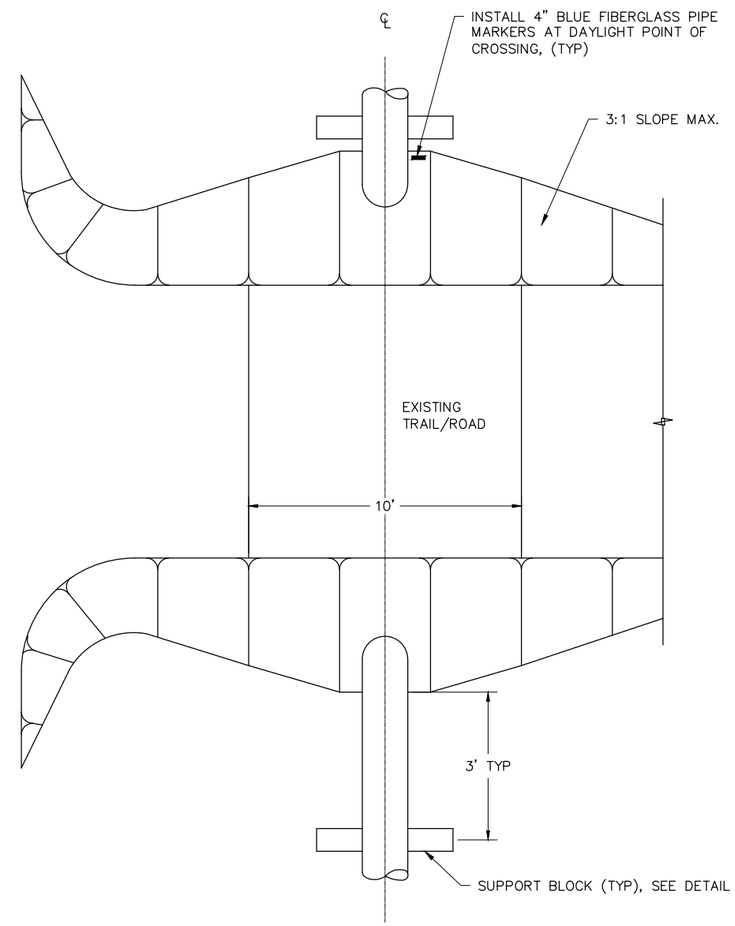

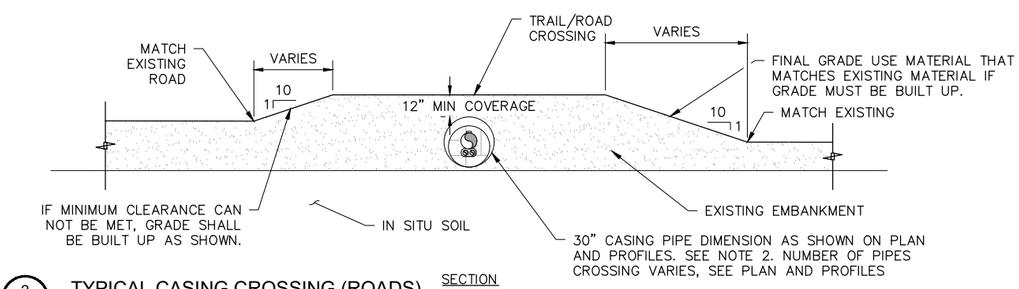

SECTION

2 / D4 TYPICAL CASING CROSSING (ROADS)
NTS

NOTE:
1. EXISTING CASING AND DIRECT BURY INSTALLATIONS SHALL BE INSTALLED THROUGH EXISTING EMBANKMENTS. CROSSINGS, WHENEVER POSSIBLE ARE NOT TO RESULT IN CHANGES TO EXISTING GRADE. IF CHANGES ARE NECESSARY, THESES DETAILS SHOW MAXIMUM ALLOWABLE GRADES. IN SITU SOIL BENEATH EMBANKMENTS IS NOT TO BE DISTURBED.
2. CASING PIPE SHALL BE 16 GAUGE GALVANIZED.

35% SUBMITTAL

REV	DATE	REVISIONS DESCRIPTION	BY

DOWL
WWW.DOWL.COM

BETHEL AVENUES PIPED WATER AND SEWER
BETHEL, ALASKA
ROAD, TRAIL & DRIVEWAY CROSSING DETAILS
LEGAL DESCRIPTION
LOCATION

PROJECT 1529.50149.01
DATE 06/10/2020

© DOWL 2020

SHEET
D4

C:\Civil 3D Projects 2018\2018\29\50149-01\Civil\SC-CU-DT-50149-01.dwg PLOT DATE 2020-6-22 14:58 SAVED DATE 2020-06-22 14:45 USER: bmjps

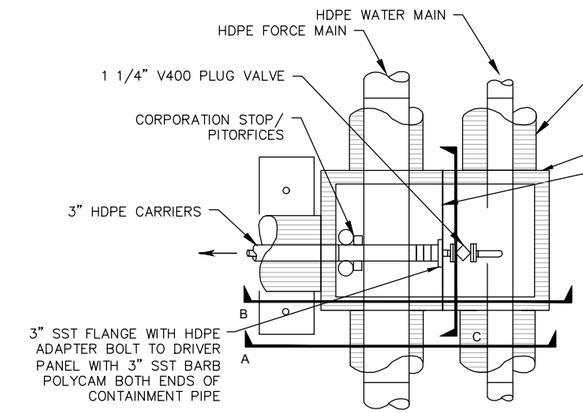

PLAN

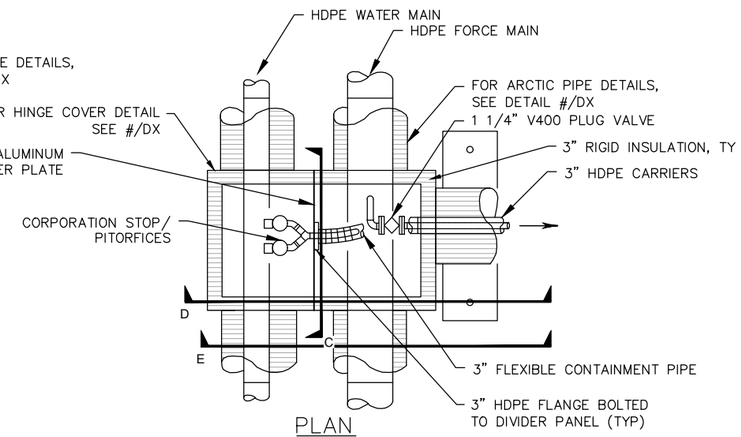

PLAN

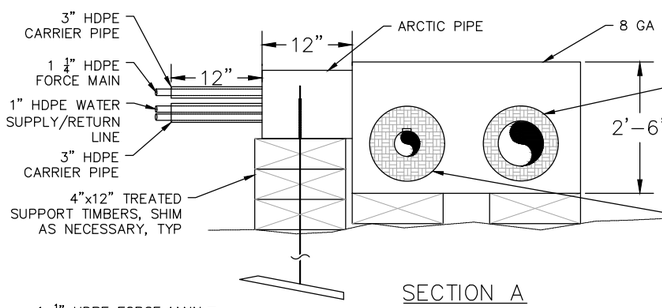

SECTION A

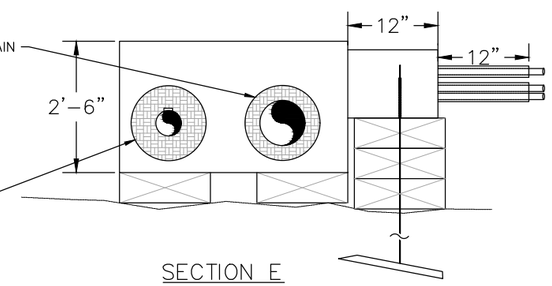

SECTION E

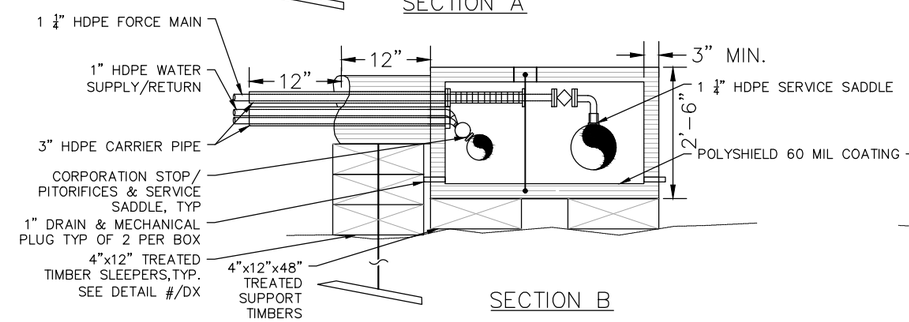

SECTION B

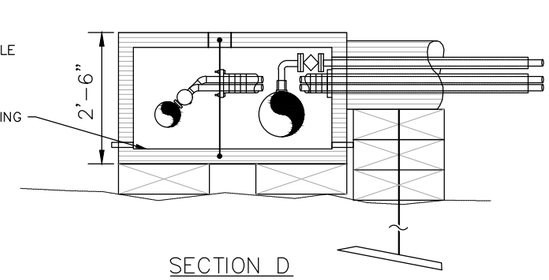

SECTION D

NOTE:
1. SERVICE UTILITY BOXES WILL HAVE EITHER 2", 3" OR 10" FORCE MAINS. THE 10" FORCE MAIN IS SHOWN ON THIS DRAWING. THE 2" AND 3" FORCE MAIN UTILITY BOX IS SIMILAR.
2. FOR CONNECTION TO ARCTIC PIPE WATER, SANITARY SEWER AND SERVICE MAIN SANITARY SEWER AND SERVICE MAIN, SEE JOINT KIT DETAILS.
3. INSTALL HEAT TRACE THROUGH DIVIDER PANEL AND WRAP AROUND SEWER PIPING WHERE SEWER FORCE MAIN RUNS ON THE FAR SIDE OF THE WATER MAIN RELATIVE TO THE SERVICE PIPE. DRILL A HOLE IN THE DIVIDER PANEL AND INSTALL A NELSON ES-J FITTING TO PROVIDE A WATERTIGHT PENETRATION FOR THE HEAT TRACE TO PASS. THE HEAT TRACE LINE SHALL BE WRAPPED AROUND THE SERVICE PIPE TO THE FORCEMAIN.
4. PROVIDE INSULATED END CAP WHERE SERVICE LINES ARE NOT CONNECTED DURING THE CURRENT PHASE OF WORK, SEE SHEET KX FOR SERVICE SCHEDULE.
5. POLYSHIELD COATING SHALL COVER THE ENTIRE INTERIOR OF THE SERVICE BOX INCLUDING THE INTERIOR LID SURFACE AND SHALL EXTEND CONTINUOUSLY OVER THE TOP EDGE OF INSULATION AND PROVIDE A CONTINUOUS SEAL BETWEEN THE INSULATION AND THE ALUMINUM WALL.

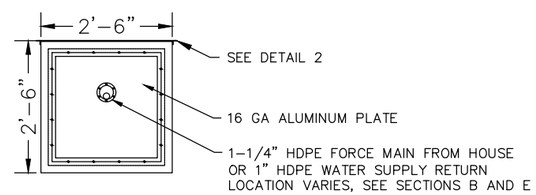

SECTION E
DIVIDER CONNECT PANEL

2 / D6 SERVICE CONNECT UTILITY BOX - WATER AND SEWER
NTS

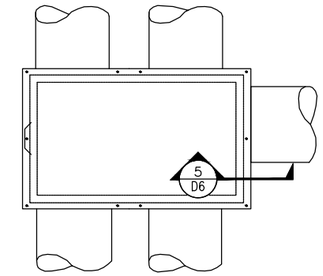

4 / D6 SERVICE BOX HINGE COVER DETAIL - WATER AND SEWER
NTS

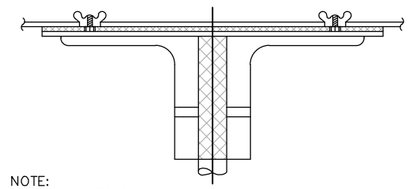

NOTE:
ALL WELDS TO BE CONTINUOUS

1 / D5 SERVICE BOX HINGE DIVIDER PANEL TOP PLATE CONNECTION
NTS

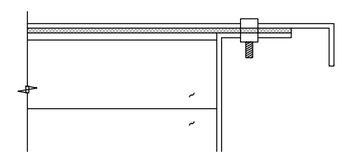

NOTE:
1. ALL WELDS SHALL BE CONTINUOUS.
2. REMOVE ALL POLYUREA ELASTOMER AND CLEAN SURFACES PRIOR TO WELDING.

1 / D6 SERVICE BOX HINGE ANGLE CONNECTION
NTS

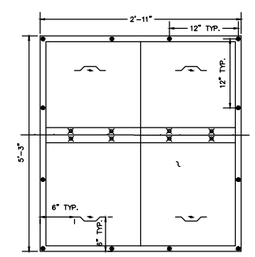

2 / D6 SERVICE BOX LID BOLT LAYOUT AND DIMENSIONS, WATER
NTS

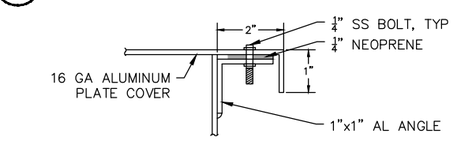

/ D6 COVER GASKET DETAIL
NTS

35% SUBMITTAL

REV	DATE	REVISIONS DESCRIPTION	BY

DOWL
WWW.DOWL.COM

BETHEL AVENUES PIPED WATER AND SEWER
BETHEL, ALASKA
STUB OUT DETAILS

LEGAL DESCRIPTION
LOCATION

PROJECT 1529.50149.01
DATE 06/10/2020

© DOWL 2020

SHEET
D5

C:\Civil 3D Projects 2018\2018\29\50149-01\Civil\SC-CU-DT-50149-01.dwg PLOT DATE 2020-6-22 16:05 SAVED DATE 2020-06-22 14:45 USER: keller

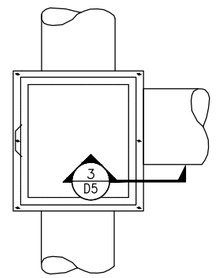

2 D6 SERVICE BOX HINGE COVER DETAIL
NTS

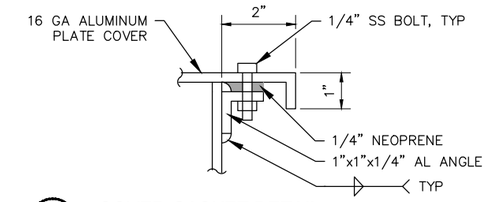

3 D6 COVER GASKET DETAIL
NTS

SERVICE CONNECTION NOTES:

1. SERVICE UTILITY BOXES WILL HAVE AN 8" HDPE WATER MAIN RUNNING EXPOSED THROUGH THEM. CONNECTIONS TO THE WATER MAIN WILL BE BY ELECTROFUSION COUPLING OR THERMOFUSION. SEE JOINT DETAILS FOR ADDITIONAL INFORMATION.
2. ALL SERVICE CONNECT UTILITY BOXES AND SERVICE LINE STUBOUT BOXES SHALL BE CONTINUOUSLY INSULATED WITH 3" OF RIGID INSULATION.
3. 60 MIL POLYSHIELD COATING SHALL COVER THE ENTIRE INTERIOR OF THE SERVICE BOX INCLUDING THE INTERIOR LID SURFACE AND SHALL EXTEND CONTINUOUSLY OVER THE TOP EDGE OF INSULATION AND PROVIDE A CONTINUOUS SEAL BETWEEN THE INSULATION AND THE ALUMINUM WALL.
4. ALL UTILITY CONNECT BOXES SHALL BE CONSTRUCTED OF 8 GAUGE ALUMINUM.
5. HEAT TRACE PULL ROPES SHALL EXTEND 2' INTO EACH SERVICE LINE STUB-OUT BOX.

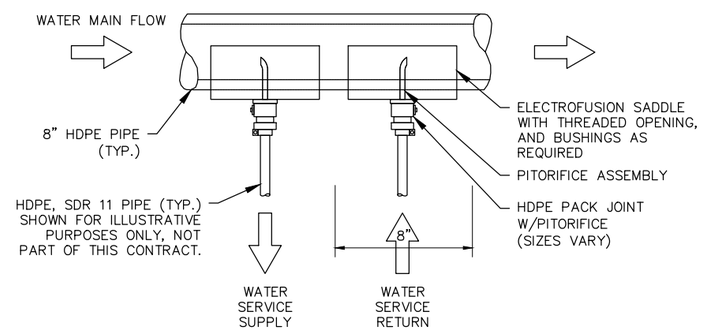

IMPORTANT: PITORIFICE ASSEMBLY MUST BE INSTALLED AS SHOWN ABOVE INSIDE A SERVICE LINE SUB-OUT BOX.

4 D6 PITORIFICE ASSEMBLY DETAIL
NTS

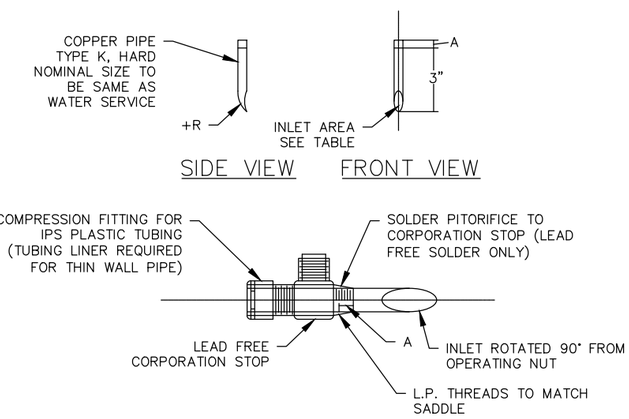

5 D6 PITORIFICE
NTS

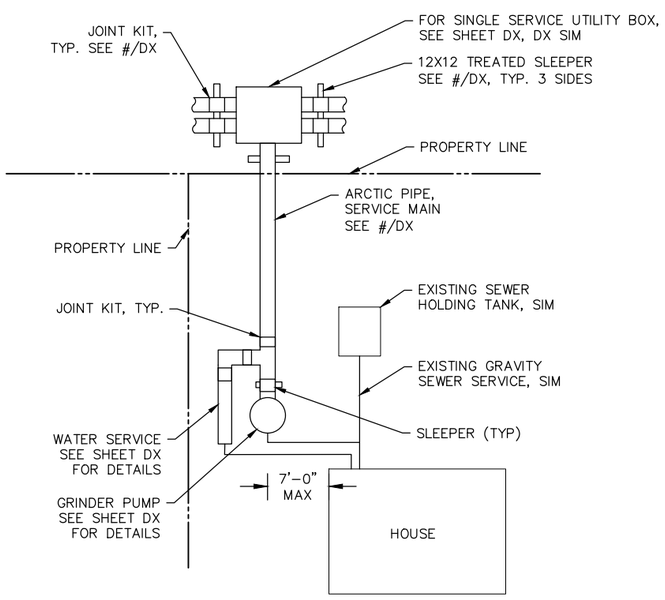

D6 TYPICAL SERVICE CONNECTION
NTS

35% SUBMITTAL

REVISIONS

REV	DATE	DESCRIPTION	BY

BETHEL AVENUES PIPED WATER AND SEWER
BETHEL, ALASKA
SERVICE LINE CONNECTIONS

LEGAL DESCRIPTION
LOCATION

DOWL
WWW.DOWL.COM

PROJECT 1529.50149.01
DATE 06/10/2020

© DOWL 2020

SHEET
D6

C:\Civil 3D Projects 2018\2018\29\50149-01\Civil\SC-CU-DT-50149-01.dwg PLOT DATE 2020-6-22 14:58 SAVED DATE 2020-06-22 14:45 USER: bmjps

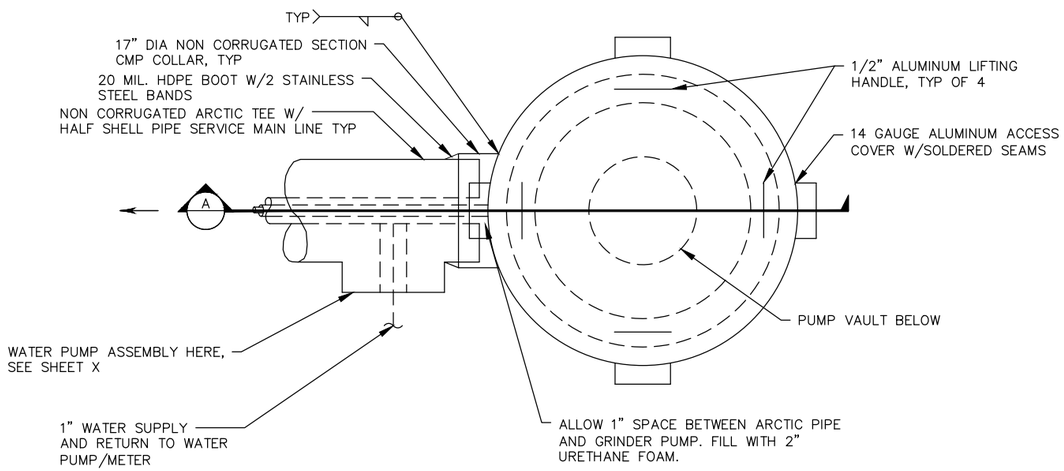

1 / D7 GRINDER PUMP ASSEMBLY PLAN VIEW
NTS

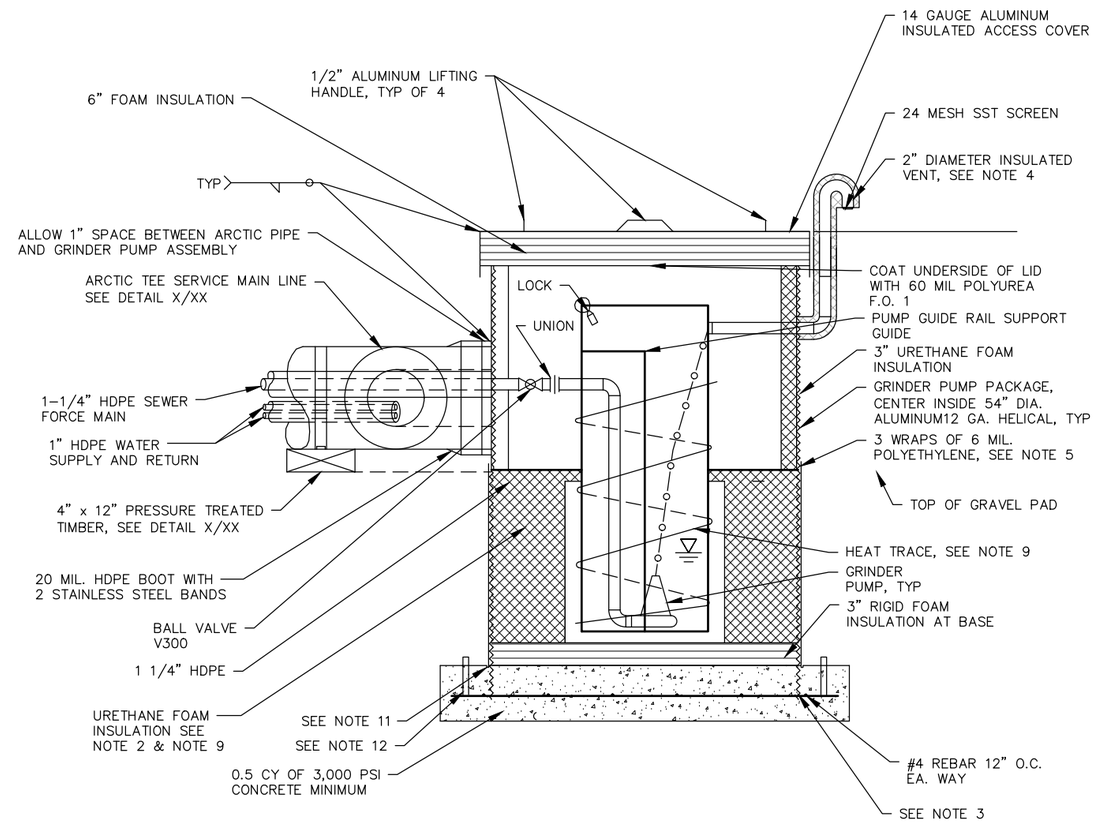

2 / D7 SINGLE RESIDENTIAL GRINDER PUMP ASSEMBLY SECTION A
NTS

NOTES:
1. ENTIRE GRINDER PUMP ASSEMBLY SHALL BE PROVIDED AS PART OF GRINDER PUMP EQUIPMENT SPECIFICATIONS 11315.
2. FIELD POUR URETHANE FOAM INSULATION IN THE ANNULAR SPACE BETWEEN PUMP VAULT AND CASING. CONTRACTOR TO BRACE PUMP VAULT TO INSURE AGAINST MOVEMENT DURING PLACEMENT OF INSULATION. SEE NOTE 9.
3. EXTEND CORRUGATED CASING INTO PRECAST CONCRETE BASE A MINIMUM OF 6 INCHES FOR (NO. 2014) AND 3" FOR (2010). APPLY BITUMASTIC COATING BOTH SIDES OF CMP.
4. PROVIDE SCREENED 24 MESH 2" DIA VENT, HEAT TRACE AND INSULATE AS SPECIFIED.
5. RUN EACH WRAP AROUND THE EXTERIOR OF THE CORRUGATED PIPE CIRCUMFERENCE, CUT AND TAPE JOINT, THEN WRAP NEXT WRAP, CUT AND TAPE, TYP OF 3 SUCH THAT ALL 3 WRAPS ARE INDEPENDENT OF EACH OTHER. END WRAP 6" ABOVE FINAL GRADE.
6. CONTRACTOR SHALL MINIMIZE EXCAVATION TIME BY USING PREFABRICATED ASSEMBLY, AS SPECIFIED.
7. DUAL COMMERCIAL (NO. 2014) GRINDER PUMP ASSEMBLY IS A CLASS 1, DIVISION 1 AREA.
8. SEE SHEET NO. K6 FOR LOCATION AND TYPE OF PIPE ASSEMBLY.
9. FORM A 3" GAP BETWEEN THE OUTSIDE PUMP ASSEMBLY WALL AND THE URETHANE FOAM INSULATION, HEAT TRACE SHALL EXTEND THRU AND ABOVE URETHANE FOAM INSULATION, 3" MINIMUM. PROVIDE 2" MINIMUM URETHANE FOAM INSULATION AROUND THE PERIMETER OF THE PUMP ASSEMBLY AS SHOW. SEAL INSULATION WITH A COLD MIX BITUMASTIC IN ORDER TO PREVENT MOISTURE INFILTRATION.
10. NOTE GRINDER PUMP ASSEMBLY TO BE LISTED AS SPECIFIED, THUS CONTRACTOR SHALL NOT ALTER THE GRINDER PUMP ASSEMBLY WITHOUT SIGNED MANUFACTURER'S APPROVAL.
11. 1/2" X 1/2" NOTCH OUT FOR SEALANT (SIKAFLEX-1a OR EQUIVALENT).
12. 2 EACH REBAR LIFTING LUG, TYPICAL BY CONTRACTOR TO FACILITATE INSTALLATION.
13. REFERENCE SHEET K-6, D-4 AND D-5..

35% SUBMITTAL

REV	DATE	DESCRIPTION	BY

REVISIONS

DOWL
WWW.DOWL.COM

BETHEL AVENUES PIPED WATER AND SEWER
BETHEL, ALASKA
SINGLE GRINDER PUMPS

LEGAL DESCRIPTION
LOCATION

PROJECT 1529.50149.01
DATE 06/10/2020

© DOWL 2020

SHEET
D7

C:\Civil 3D Projects 2018\2018\29\50149-01\Civil\SC-CU-DT-50149-01.dwg PLOT DATE 2020-6-22 14:58 SAVED DATE 2020-06-22 14:45 USER: bmjps

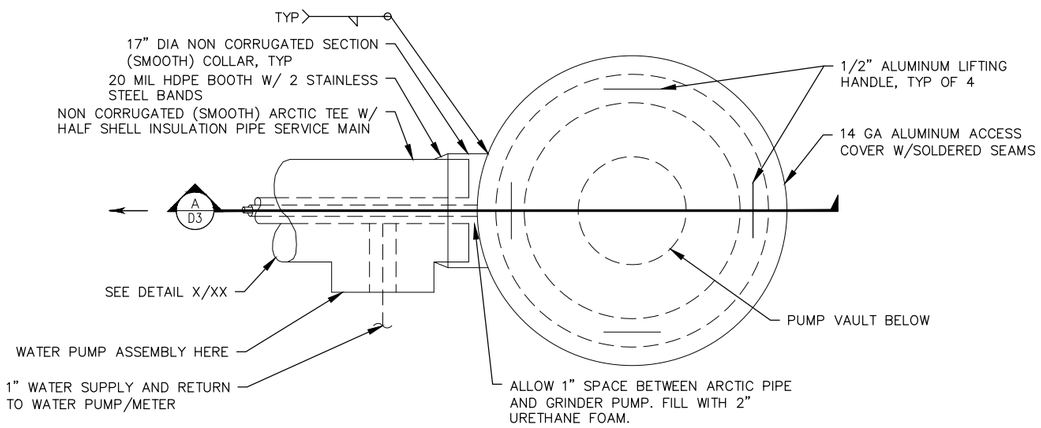

1 / D8 GRINDER PUMP ASSEMBLY PLAN VIEW
NTS

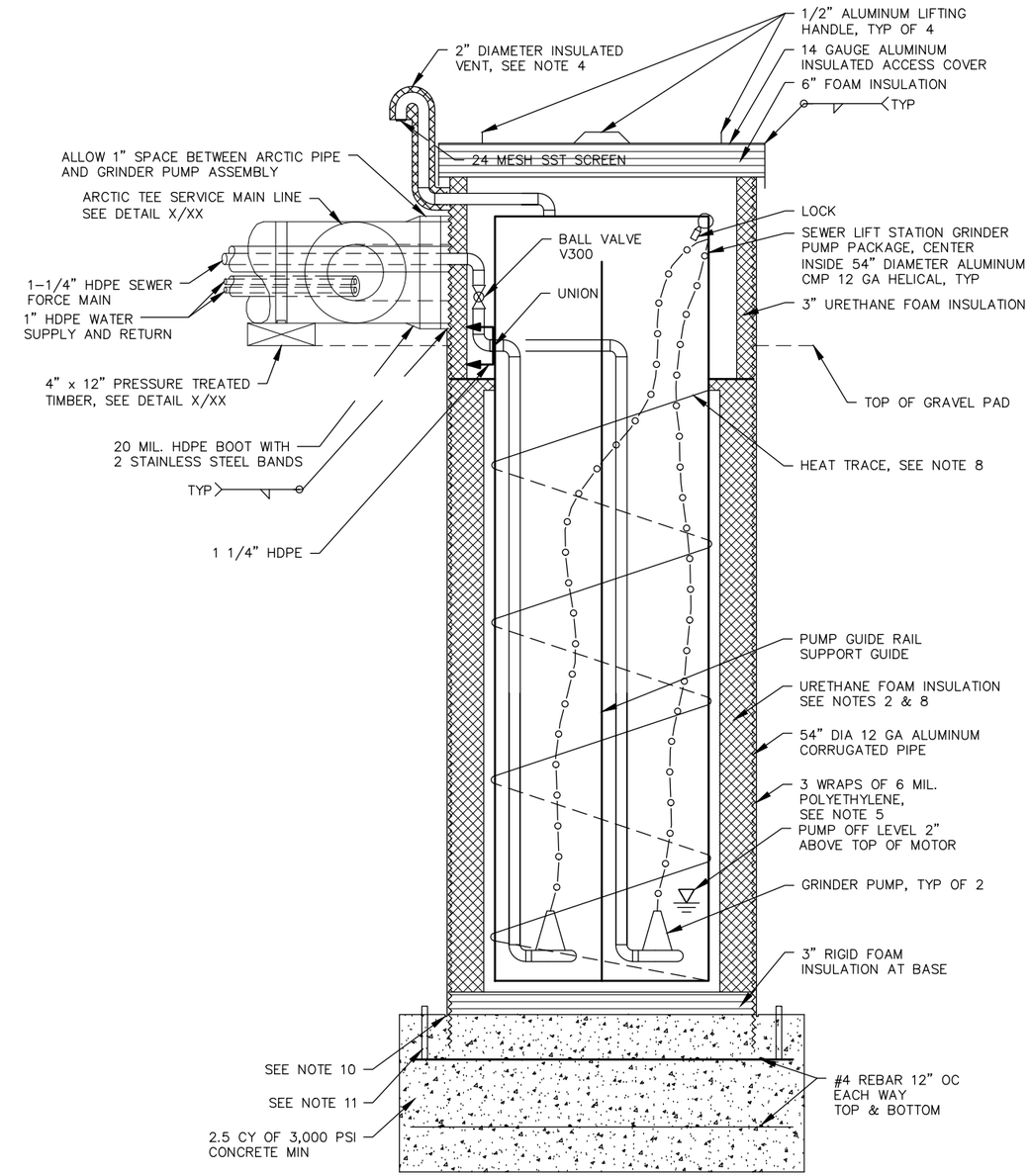

2 / D8 DUAL COMMERCIAL GRINDER PUMP ASSEMBLY SECTION A
NTS

NOTES:
1. ENTIRE GRINDER PUMP ASSEMBLY SHALL BE PROVIDED AS PART OF GRINDER PUMP EQUIPMENT SPECIFICATIONS 11315.
2. FIELD POUR URETHANE FOAM INSULATION IN THE ANNULAR SPACE BETWEEN PUMP VAULT AND CASING. CONTRACTOR TO BRACE PUMP VAULT TO INSURE AGAINST MOVEMENT DURING PLACEMENT OF INSULATION. SEE NOTE 8.
3. EXTEND CORRUGATED CASING INTO PRECAST CONCRETE BASE A MINIMUM OF 6 INCHES FOR (NO. 2014) AND 3" FOR (2010). APPLY BITUMASTIC COATING BOTH SIDES OF CMP.
4. PROVIDE SCREENED 24 MESH 2" DIA VENT, HEAT TRACE AND INSULATE AS SPECIFIED.
5. RUN EACH WRAP AROUND THE EXTERIOR OF THE CORRUGATED PIPE CIRCUMFERENCE, CUT AND TAPE JOINT, THEN WRAP NEXT WRAP, CUT AND TAPE, TYP OF 3 SUCH THAT ALL 3 WRAPS ARE INDEPENDENT OF EACH OTHER. END WRAP 6" ABOVE FINAL GRADE.
6. CONTRACTOR SHALL MINIMIZE EXCAVATION TIME BY USING PREFABRICATED ASSEMBLY, AS SPECIFIED.
7. DUAL COMMERCIAL (NO. 2014) GRINDER PUMP ASSEMBLY IS A CLASS 1, DIVISION 1 AREA.
8. FORM A 3" GAP BETWEEN THE OUTSIDE PUMP ASSEMBLY WALL AND THE URETHANE FOAM INSULATION, HEAT TRACE SHALL EXTEND THRU AND ABOVE URETHANE FOAM INSULATION, 3" MINIMUM. PROVIDE 2" MINIMUM URETHANE FOAM INSULATION AROUND THE PERIMETER OF THE PUMP ASSEMBLY AS SHOWN. SEAL INSULATION WITH A COLD MIX BITUMASTIC IN ORDER TO PREVENT MOISTURE INFILTRATION.
9. NOTE GRINDER PUMP ASSEMBLY TO BE LISTED AS SPECIFIED, THUS CONTRACTOR SHALL NOT ALTER THE GRINDER PUMP ASSEMBLY WITHOUT SIGNED MANUFACTURER'S APPROVAL.
10. 1/2" X 1/2" NOTCH OUT FOR SEALANT (SIKAFLEX-1a OR EQUIVALENT).
11. 2 EACH REBAR LIFTING LUG, TYPICAL BY CONTRACTOR TO FACILITATE INSTALLATION.

35% SUBMITTAL

REV	DATE	REVISIONS DESCRIPTION	BY

DOWL
WWW.DOWL.COM

BETHEL AVENUES PIPED WATER AND SEWER
BETHEL, ALASKA
DUAL GRINDER PUMPS

LEGAL DESCRIPTION
LOCATION

PROJECT 1529.50149.01
DATE 06/10/2020

© DOWL 2020

SHEET
D8

C:\Civil 3D Projects 2018\2018\29\50149-01\Civil\SC-CU-DT-50149-01.dwg PLOT DATE 2020-6-22 14:58 SAVED DATE 2020-06-22 14:45 USER: bmjos

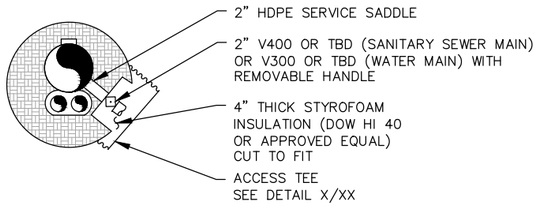

NOTE:

FIELD INSTALL AT ALL LOW POINTS OF PIPELINE. COORDINATE ACTUAL LOCATIONWITH OWNER'S FIELD REPRESENTATIVE.

1/XX DRAIN VALVE DETAIL
NTS

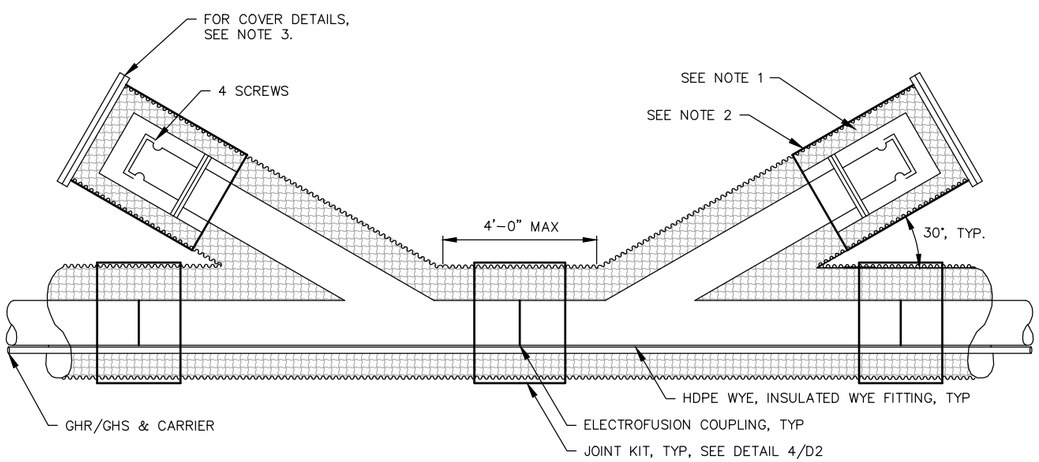

NOTES:
1. PROVIDE INSULATION, 2" MIN. ON ACCESS COVER WALLS AND COVER.
2. PROVIDE REMOVABLE INSULATED HALF-SHELL 16 GAUGE GALV STEEL COVER, BAND TO ALLOW ACCESS TO CAMLOCK COUPLING FOR CLEANING OF FORCE MAIN, SEE JOINT KIT, SIM.
3. TO THE FUSED-ON HDPE FLANGE IS MATED A D.I. FLANGE X 2" THREADED FLANGE FITTING. INTO THIS 2" THREADED FITTING GOES A 2" MALE THREAD X 2" MALE CAMLOCK AND CAP.

3/XX FORCE MAIN ABOVE GRADE CLEAN OUT DETAIL
NTS

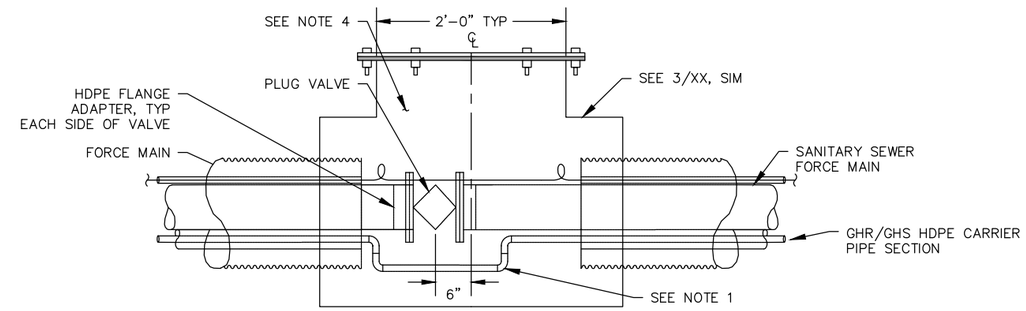

FORCE MAIN ISOLATION VALVE NOTES:

1. TERMINATE GHR/GHS CARRIER PIPE SECTION AND ROUTE GHR&GHS THROUGH TEE SECTION AROUND PLUG VALVE AND TO GHR/GHS CARRIER PIPE ON OTHER SIDE OF THE SECTION.
2. LOCATE VALVE 6" OFF THE CENTER OF TEE TO ALLOW FOR LEVER HANDLE (APPROX. 10" IN LENGTH) OPERATION.
3. PROVIDE 3" MIN URETHANE INSULATION, BUT TO FIT AROUND FORCE MAIN ISOLATION VALVE AND GHR/GHS.
4. PROVIDE OPEN ACCESS AREA TO VALVE HANDLE AND BODY FOR EASE OF OPERATION. CONTRACTOR SHALL PROVIDE 2" MIN INSULATION ON THE TEE COVER AND SIDES.

FORCE MAIN

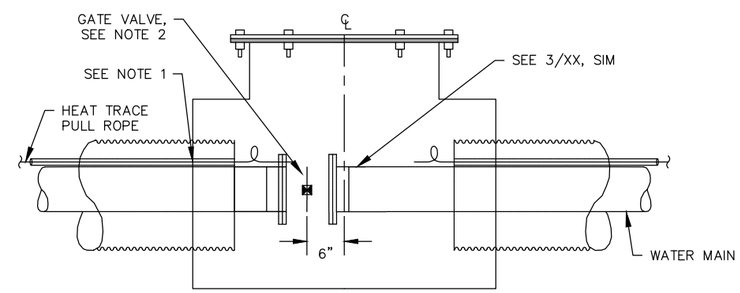

WATER MAIN ISOLATION VALVE NOTES:

1. TERMINATE HEAT TRACE CHANNEL SECTION AT TEE, TYP EACH SIDE OF TEE. TERMINATE HEAT TRACE PULL ROPE IN TEE SECTION WITH 2 FEET OF ADDITIONAL HEAT TRACE PULL ROPE EXTENDING INTO TEE SECTION FOR FUTURE CONNECTION.
2. LOCATE VALVE 6" OFF THE CENTER OF TEE TO ALLOW FOR LEVER HANDLE (APPROX. 10" IN LENGTH) OPERATION.
3. PROVIDE 3" MIN URETHANE INSULATION, BUT TO FIT AROUND WATER MAIN ISOLATION VALVE AND HEAT TRACE CHANNEL.
4. PROVIDE OPEN ACCESS AREA TO VALVE HANDLE AND BODY FOR EASE OF OPERATION. CONTRACTOR SHALL PROVIDE 2" MIN INSULATION ON THE TEE COVER AND SIDES.

WATER MAIN

1/XX ISOLATION VALVE DETAIL
NTS

35% SUBMITTAL

REV	DATE	REVISIONS DESCRIPTION	BY

DOWL
WWW.DOWL.COM

BETHEL AVENUES PIPED WATER AND SEWER
BETHEL, ALASKA
JOINTS

LEGAL DESCRIPTION
LOCATION

PROJECT 1529.50149.01
DATE 06/10/2020

© DOWL 2020

SHEET
D9

C:\Civil 3D Projects 2018\2018\29\50149-01\Civil\SC-CU-DT-50149-01.dwg PLOT DATE 2020-6-22 14:58 SAVED DATE 2020-06-22 14:45 USER: bmjps

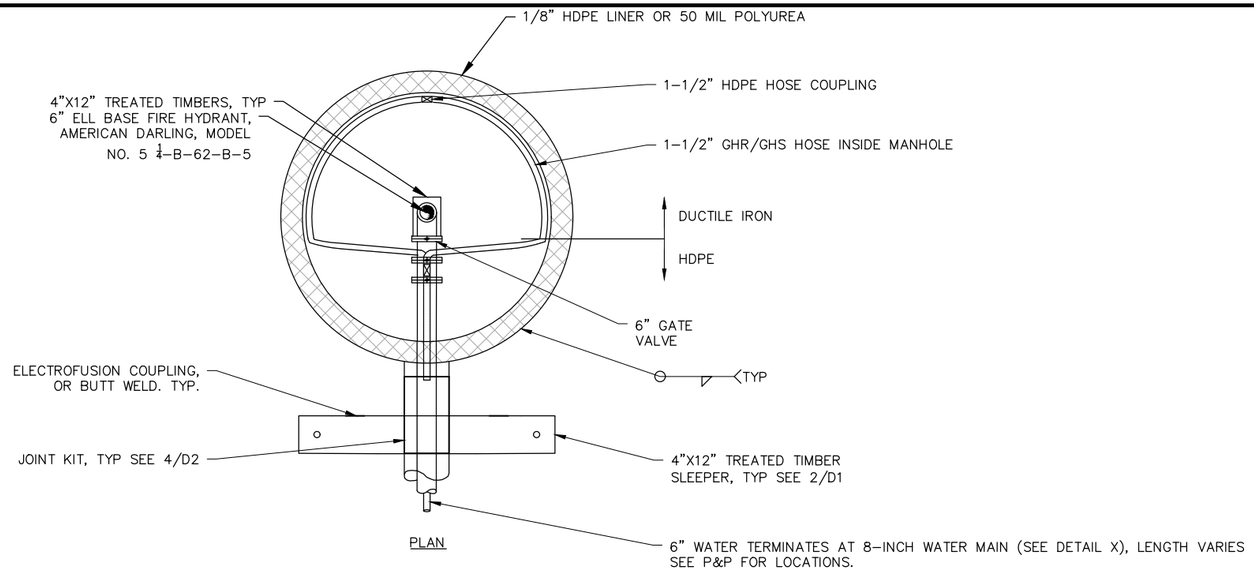

PLAN

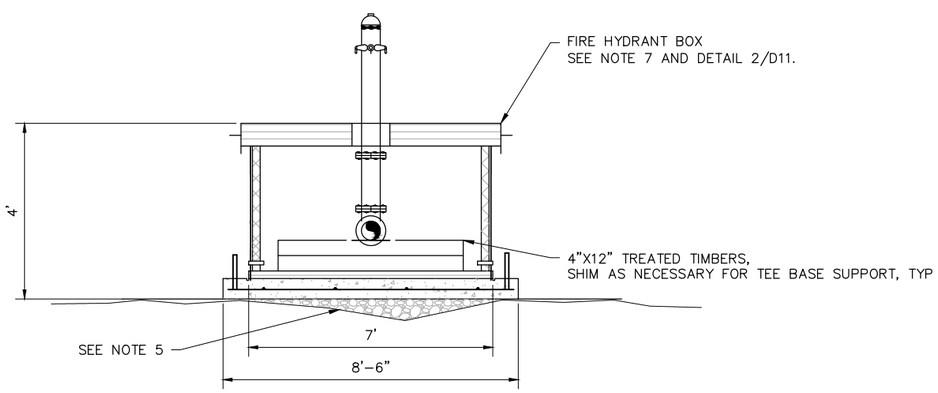

ELEVATION

NOTES:
1. THIS DETAIL IS TO BE USED ONCE, IT IS ALSO SHOWN AS AN ACCEPTABLE SOLUTION FOR HYDRANT INSTALLATION IF AN IRRESOLVABLE FIELD CONFLICT EXISTS.
2. REFER TO PLAN AND PROFILE DRAWINGS FOR FIRE HYDRANT ORIENTATION AND LOCATION.
3. PLACE ALL FIRE HYDRANTS WITH PUMPER CONNECTIONS ORIENTED PERPENDICULAR TO ROADWAY CENTERLINE, PER UNIFORM FIRE CODE. IF HYDRANT IS NOT LOCATED ON ROADWAY CONTACT ENGINEER FOR DIRECTION.
4. PROVIDE 12 GAUGE ALUMINUM INSULATED PIPE NOZZLE (NON CORRUGATED) WELD TO 12 GAUGE ALUMINUM CMP MANHOLE AS SHOWN, TYP.
5. SEE DETAIL X/XX FOR EXISTING GROUND PREPARATION REQUIREMENTS.
6. AIR RELEASES ARE CO-LOCATED WITH HYDRANT. AIR RELEASES ARE TO BE PLACED INSIDE HYDRANT BOX. VALVES FOR WATER MAIN AND GLYCOL AIR RELEASE ARE TO BE LOCATED INSIDE HYDRANT BOX.
7. REFER TO SHEET D11 FOR FURTHER DETAILS ON THE FIRE HYDRANT BOX.
8. HEAT TRACE PULL ROPE EXTENDS INTO HYDRANT ASSEMBLY BY 2'.

1 / D10 TYPICAL END OF LINE FIRE HYDRANT DETAIL
NTS

35% SUBMITTAL

REV	DATE	REVISIONS DESCRIPTION	BY

DOWL
WWW.DOWL.COM

BETHEL AVENUES PIPED WATER AND SEWER
BETHEL, ALASKA
FIRE HYDRANT LEG DETAIL

LEGAL DESCRIPTION
LOCATION

PROJECT 1529.50149.01
DATE 06/10/2020

© DOWL 2020

SHEET
D10

C:\Civil 3D Projects 2018\2018\29\50149-01\Civil\SC-CU-DT-50149-01.dwg PLOT DATE 2020-6-22 14:58 SAVED DATE 2020-06-22 14:45 USER: bmjps

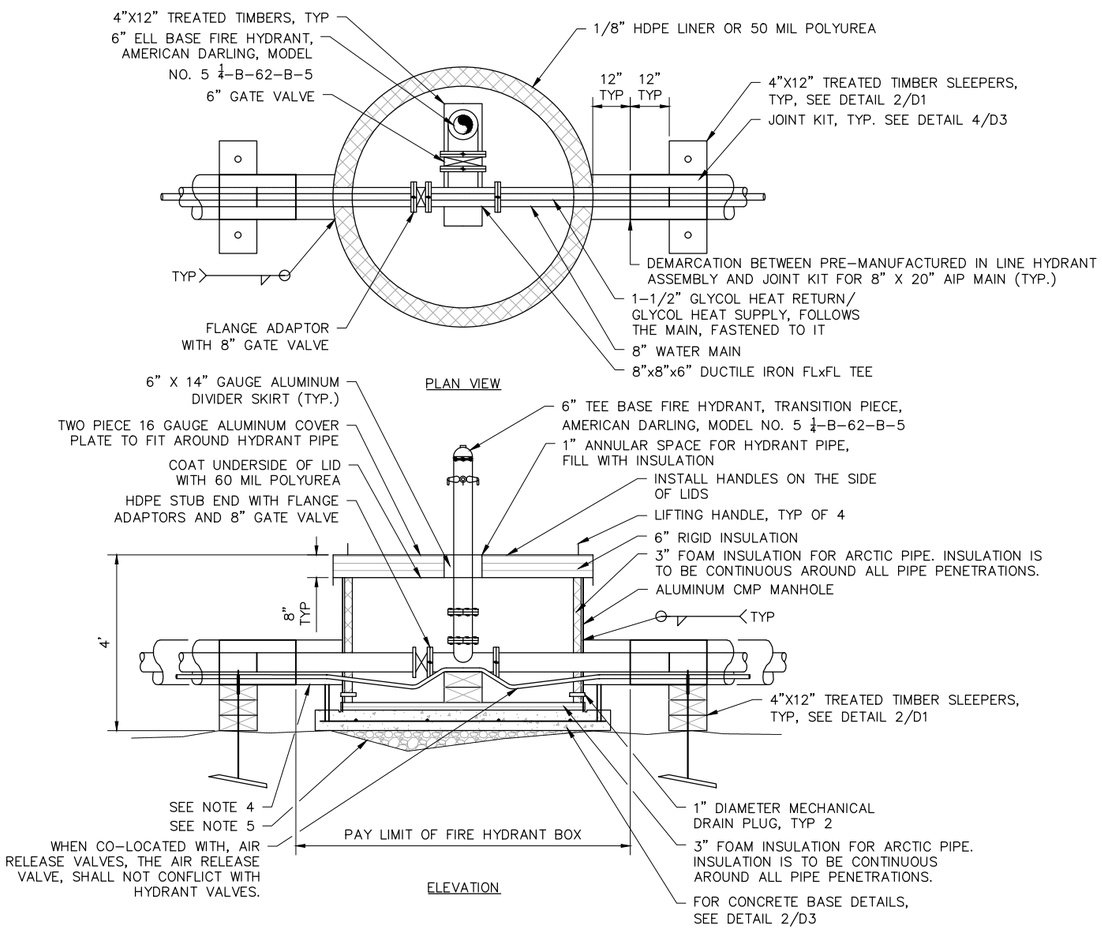

NOTES:
1. REFER TO PLAN AND PROFILE DRAWINGS FOR FIRE HYDRANT ORIENTATION AND LOCATION.
2. PLACE ALL FIRE HYDRANTS WITH PUMPER CONNECTIONS ORIENTED PERPENDICULAR TO ROADWAY CENTERLINE, PER UNIFORM FIRE CODE. IF HYDRANT IS NOT LOCATED ON ROADWAY, CONTACT ENGINEER FOR DIRECTION.
3. PROVIDE STRAP SUPPORT TO 4"x12" TREATED TIMBER, SEE DETAIL 2/D1.
4. PROVIDE 12 GAUGE AL INSULATED PIPE NOZZLE (NON CORRUGATED). WELD TO 12 GAUGE AL CMP MANHOLE AS SHOWN, TYP.
5. SEE NOTE 2 OF HYDRANT BASE DETAIL 2/D4 FOR EXISTING GROUND PREPARATION REQUIREMENTS.
6. IN ACCORDANCE WITH SHEETS C1-C15, AIR RELEASE ARE CO-LOCATED WITH HYDRANTS WHEN POSSIBLE. AIR RELEASES ARE TO BE PLACED INSIDE THE HYDRANT BOX. VALVES FOR WATER MAIN AND GLYCOL AIR RELEASES WILL BE LOCATED INSIDE HYDRANT BOX.
7. INSIDE DIAMETER OF ACCESS COVER SHALL BE 1" LARGER THAN OUTSIDE DIAMETER OF AL CMP MANHOLE, TO PROVIDE SNUG FIT.

1 / D9 TYPICAL INLINE FIRE HYDRANT DETAIL
NTS

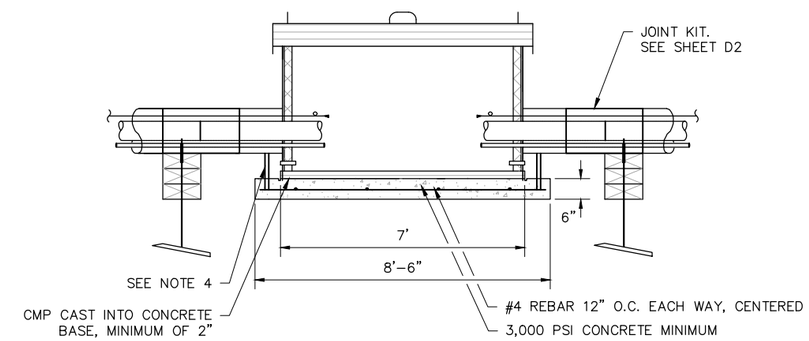

NOTES:
1. PROVIDE JOINT KIT, SEE SHEET D3.
2. PLACE GEOTEXTILE ON EXISTING GROUND AND LEVEL SURFACE WITH IMPORTED GRAVEL PRIOR TO MANHOLE PLACEMENT, TYP ALL ABOVE GRADE MANHOLE INSTALLATIONS. GEOTEXTILE SHALL EXTEND 12" BEYOND THE SLAB OR AS REQUIRED TO ACCOMODATE A 3H:1V FILL SLOPE AS REQUIRED FOR MANHOLE LEVELING. IMPORTED GRAVEL SHALL BE USED TO BRING UP GRADE AS NECESSARY TO AVOID STANDING WATER.
3. APPLY BITUMASTIC COATING TO BOTH SIDES OF CMP.
4. REBAR LIFTING LUGS. CONTRACTOR TO FACILITATE INSTALLATION.

2 / D9 HYDRANT BASE DETAIL
NTS

35% SUBMITTAL

REVISIONS

REV	DATE	DESCRIPTION	BY

DOWL
WWW.DOWL.COM

BETHEL AVENUES PIPED WATER AND SEWER
BETHEL, ALASKA
IN-LINE HYDRANT
LEGAL DESCRIPTION
LOCATION

PROJECT 1529.50149.01
DATE 06/10/2020

© DOWL 2020

SHEET
D11

C:\Civil 3D Projects 2018\2018\29\50149-01\Civil\SC-CU-DT-50149-01.dwg PLOT DATE 2020-6-22 14:59 SAVED DATE 2020-06-22 14:45 USER: bmjos

1.	HDPE SERVICE LINE	(1" OR 2"ø) HDPE (PE 3408), SDR 11, 160 PSI MIN., NSF 61 APP. DRISCOPIPE 1000 OR EQUAL
2.	PIPE COUPLING BAND	NOMINAL 12" & 13" DIAMETER, 16 GA. ALUMINUM, SINGLE PIECE, 3-BOLT BAND.
3.	ARCTIC LONG SWEEP 90° BEND	NOMINAL 4" x 12" & 6" x 13" PRE-INSULATED HDPE, SDR 17, 90° LONG SWEEP (30" BEND RADIUS), HDPE JACKET, PUSH ON COUPLING x BEVELED END.
4.	ARCTIC BOOT	FERNCO ADH-13, 12" & 13" DIAMETER x 29" LONG ARCTIC DRAIN HOUSING WITH 8 BOLT UPPER RING 7/16" HOLES; FERNCO INC., DAVISON, MI (800-521-1283).
5.	TRANSITION FITTING	1" POLY-CAM STANDARD MPT TRANSITION FITTING, SDR 11
6.	LOCKABLE BALL VALVE	1" RED WHITE BALL VALVE W/ PADLOCK WINGS, 1" FIPT x FIPT.
7.	HEAT TRACE	5W/ FT, SELF LIMITING RAYCHEM TYPE 5XL1-CT, OR EQUAL.
8.	HEAT TRACE POWER CONNECTION	HEAT TRACE POWER CONNECTION KIT, RAYCHEM HTS WINTERGARD #H908 OR EQUAL. USE MANUFACTURER'S RECOMMENDED HEAT TRACE END SEAL FOR BELOW GROUND CONDITIONS.
9.	INSULATED ARCTIC BOX	INSULATED PLYWOOD ARCTIC BOX WITH HINGED LID AND REMOVABLE FRONT PANEL. FABRICATE DETAIL, SHEET C107 AND C108. APPROXIMATE SIZE = 8 CUBIC FEET.
10.	RUBBER WEATHER STRIP	1/8" THICK x 8" WIDE RUBBER WEATHER STRIP (55-65 DUROMETER EPDM). SECURE TO WALL ONLY WITH 1/8" x 1" STAINLESS STEEL WOOD SCREW AT 6" O.C. AND 1½" FROM EACH END

NOTE:
CONTRACTOR SHALL COORDINATE WITH PROPERTY OWNER TO FIELD ENGINEER CONNECTION TO EACH RESIDENCE GIVEN SPECIFIC CONDITIONS AND CONFIGURATION OF PLUMBING.

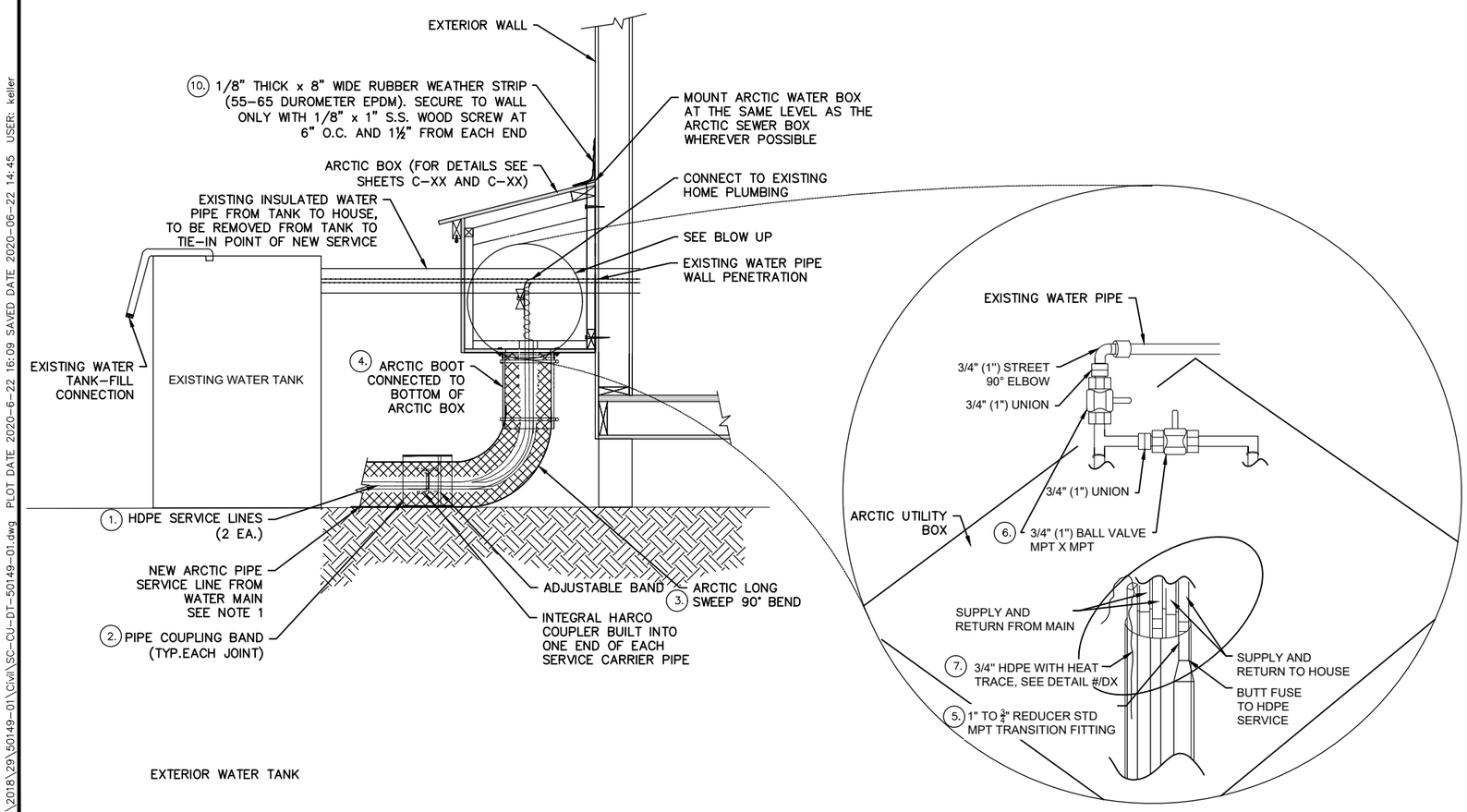

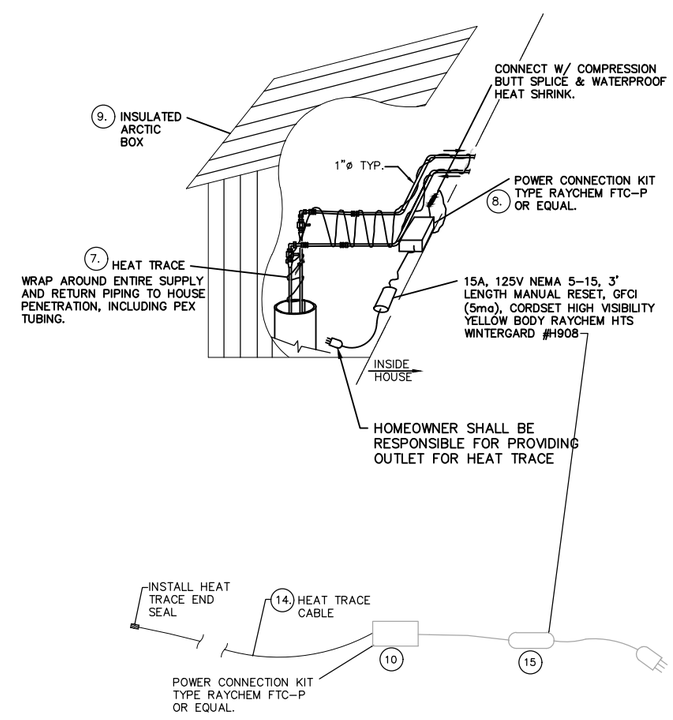

1 / D12 CONNECTING TO HOUSE WITH EXTERIOR WATER TANK
NTS

35% SUBMITTAL

REV	DATE	REVISIONS DESCRIPTION	BY

BETHEL ALASKA

DOWL
WWW.DOWL.COM

BETHEL AVENUES PIPED WATER AND SEWER
BETHEL, ALASKA
EXT. WATER TANK CONNECTION

LEGAL DESCRIPTION
LOCATION

PROJECT 1529.50149.01
DATE 06/10/2020

© DOWL 2020

SHEET
D12

C:\Civil 3D Projects 2018\2018\29\50149-01\Civil\SC-CU-DT-50149-01.dwg PLOT DATE 2020-6-22 16:09 SAVED DATE 2020-06-22 14:45 USER: keller

1. HDPE SERVICE LINE	(1" OR 2"ø) HDPE (PE 3408), SDR 11, 160 PSI MIN., NSF 61 APP. DRISCOPIPE 1000 OR EQUAL
2. PIPE COUPLING BAND	NOMINAL 12" & 13" DIAMETER, 16 GA. ALUMINUM, SINGLE PIECE, 3-BOLT BAND.
3. ARCTIC LONG SWEEP 90° BEND	NOMINAL 4" x 12" & 6" x 13" PRE-INSULATED HDPE, SDR 17, 90° LONG SWEEP (30" BEND RADIUS), HDPE JACKET, PUSH ON COUPLING x BEVELED END.
4. ARCTIC BOOT	FERNCO ADH-13, 12" & 13" DIAMETER x 29" LONG ARCTIC DRAIN HOUSING WITH 8 BOLT UPPER RING 7/16" HOLES; FERNCO INC., DAVISON, MI (800-521-1283).
5. TRANSITION FITTING	1" POLY-CAM STANDARD MPT TRANSITION FITTING, SDR 11
6. LOCKABLE BALL VALVE	1" RED WHITE BALL VALVE W/ PADLOCK WINGS, 1" FIPT x FIPT.
7. HEAT TRACE	5W/ FT, SELF LIMITING RAYCHEM TYPE 5XL1-CT, OR EQUAL.
8. INSULATED ARCTIC BOX	INSULATED PLYWOOD ARCTIC BOX WITH HINGED LID AND REMOVABLE FRONT PANEL. FABRICATE DETAIL, SHEET C107 AND C108. APPROXIMATE SIZE = 8 CUBIC FEET.
9. RUBBER WEATHER STRIP	1/8" THICK x 8" WIDE RUBBER WEATHER STRIP (55-65 DUROMETER EPDM). SECURE TO WALL ONLY WITH 1/8" x 1" STAINLESS STEEL WOOD SCREW AT 6" O.C. AND 1½" FROM EACH END

NOTE:
CONTRACTOR SHALL COORDINATE WITH PROPERTY OWNER TO FIELD ENGINEER CONNECTION TO EACH RESIDENCE GIVEN SPECIFIC CONDITIONS AND CONFIGURATION OF PLUMBING.

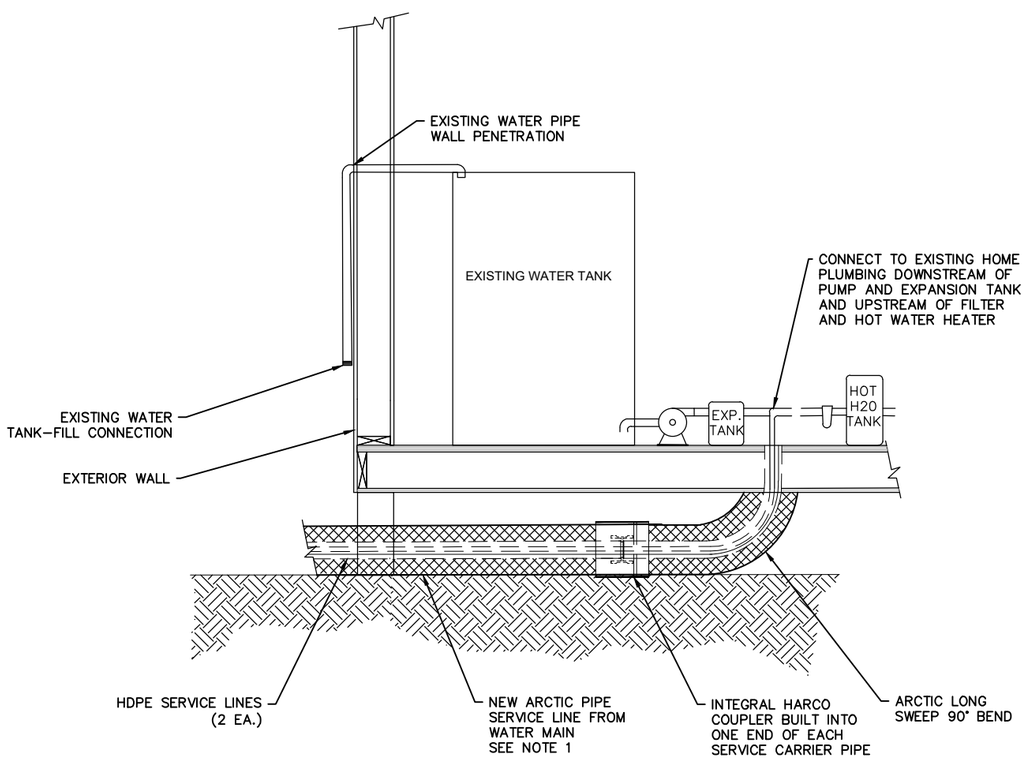

1 / D13 CONNECTING TO HOUSES WITH INTERIOR WATER TANK
NTS

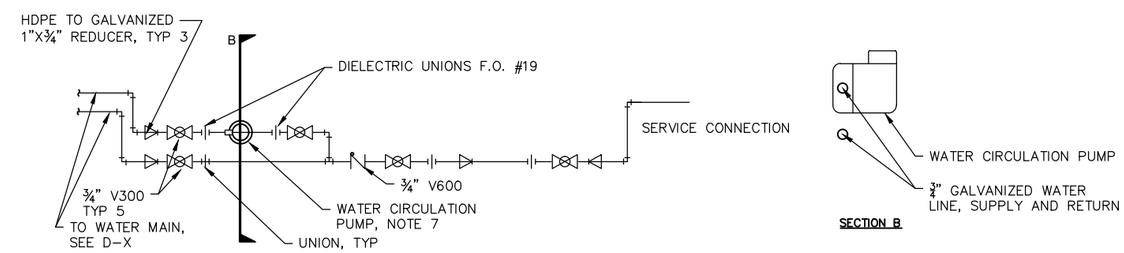

1 / X WATER SERVICE BOX ASSEMBLY SECTION A
NTS

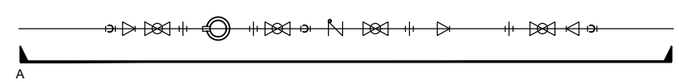

2 / X WATER SERVICE BOX ASSEMBLY PLAN
NTS

SERVICE PLAN NOTE

IN ACCORDANCE WITH SPECIFICATIONS, CONTRACTOR SHALL SUBMIT A SERVICE PLAN FOR EACH SERVICE. THIS DETAIL IS ONLY TO BE USED FOR INSTANCES WHEN A LOCATION INSIDE THE FACILITY IS UNAVAILABLE FOR INSTALLATION OF CIRCULATION PUMP, WATER METER, VALVES AND BACKFLOW PREVENTER.

NOTES:

1. FOR ADDITIONAL INFORMATION, SEE SHEET K-X AND D-X.
2. NOT ALL WATER SERVICE BOX ASSEMBLIES INCLUDE WATER CIRCULATION PUMPS, FOR WATER CIRCULATION PUMP LOCATIONS, SEE EQUIPMENT SCHEDULE DRAWING K-X.
3. CONTINUE ARCTIC PIPE WATER SERVICE MAIN AS SHOWN ON DRAWING K-X. PROVIDE JOINT KIT TO CONNECT TRANSITION FROM WATER SERVICE BOX TO ARCTIC PIPE.
4. CONTRACTOR SHALL PROVIDE PIPE SUPPORT FOR ASSEMBLY AT BOTH ENDS AND THE MIDDLE OF ASSEMBLY. (PROVIDE SHOP DRAWINGS FOR THE ENGINEER).
5. PUMP ASSEMBLY SHALL BE EASILY ACCESSIBLE AND REMOVABLE IN ORDER FOR FUTURE SCHEDULED MAINTENANCE TO BE PERFORMED. MINIMUM 1 FOOT ON CENTER 3/8" SST MACHINE BOLT.
6. 21" DIAMETER ARCTIC PIPE SHALL BE CONNECTED TO 15" SERVICE LINE WITH AN AL CMP PLATE REDUCER.
7. WATER CIRCULATION PUMP ORIENTATION SHALL FOLLOW MANUFACTURER'S REQUIREMENTS. DO NOT MOUNT MOTOR SHAFT IN VERTICAL POSITION.
8. HEAT TRACE SHALL BE PLACED AROUND ALL SERVICE APPURTENANCES AND COME FROM FACILITY. FOR HEAT TRACE, SEE DETAIL #/DX.
9. WATER SERVICE BOX ASSEMBLY IS TO BE PLACED AS CLOSE TO FACILITY CONNECTION POINT AS POSSIBLE. LOCATION IS TO BE COORDINATED WITH SERVICE OWNER, AND IN ACCORDANCE WITH NOTES ON SHEET GX.

35% SUBMITTAL

REV	DATE	REVISIONS DESCRIPTION	BY

DOWL
WWW.DOWL.COM

BETHEL AVENUES PIPED WATER AND SEWER
BETHEL, ALASKA
INT. WATER TANK CONNECTION
LEGAL DESCRIPTION LOCATION

PROJECT 1529.50149.01
DATE 06/10/2020

© DOWL 2020

SHEET
D13

C:\Civil 3D Projects 2018\2018\29\50149-01\Civil\SC-CU-DT-50149-01.dwg PLOT DATE 2020-6-26 11:22 SAVED DATE 2020-06-26 11:21 USER: bmjos

1.	HDPE SERVICE LINE	(1" OR 2"ø) HDPE (PE 3408), SDR 11, 160 PSI MIN., NSF 61 APP. DRISCOPIPE 1000 OR EQUAL
2.	PIPE COUPLING BAND	NOMINAL 12" & 13" DIAMETER, 16 GA. ALUMINUM, SINGLE PIECE, 3-BOLT BAND.
3.	ARCTIC LONG SWEEP 90° BEND	NOMINAL 4" x 12" & 6" x 13" PRE-INSULATED HDPE, SDR 17, 90° LONG SWEEP (30" BEND RADIUS), HDPE JACKET, PUSH ON COUPLING x BEVELED END.
4.	ARCTIC BOOT	FERNCO ADH-13, 12" & 13" DIAMETER x 29" LONG ARCTIC DRAIN HOUSING WITH 8 BOLT UPPER RING 7/16" HOLES; FERNCO INC., DAVISON, MI (800-521-1283).
5.	TRANSITION FITTING	1" POLY-CAM STANDARD MPT TRANSITION FITTING, SDR 11
6.	LOCKABLE BALL VALVE	1" RED WHITE BALL VALVE W/ PADLOCK WINGS, 1" FIPT x FIPT.
7.	CONNECTION HOSE WITH ADAPTERS	3/4" I.D. NSF APPROVED POTABLE WATER HOSE TYPE PEX A, REHAUS OR EQUAL.
8.	ADJUSTABLE BANDS	STAINLESS STEEL, 1" WIDE, ADJUSTABLE.
9.	HEAT TRACE	5W/ FT, SELF LIMITING RAYCHEM TYPE 5XL1-CT, OR EQUAL.
10.	HEAT TRACE POWER CONNECTION	HEAT TRACE POWER CONNECTION KIT, RAYCHEM HTS WINTERGARD #H908 OR EQUAL. USE MANUFACTURER'S RECOMMENDED HEAT TRACE END SEAL FOR BELOW GROUND CONDITIONS.
11.	INSULATED ARCTIC BOX	INSULATED PLYWOOD ARCTIC BOX WITH HINGED LID AND REMOVABLE FRONT PANEL. FABRICATE DETAIL, SHEET C107 AND C108. APPROXIMATE SIZE = 8 CUBIC FEET.
12.	RUBBER WEATHER STRIP	1/8" THICK x 8" WIDE RUBBER WEATHER STRIP (55-65 DUROMETER EPDM). SECURE TO WALL ONLY WITH 1/8" x 1" STAINLESS STEEL WOOD SCREW AT 6" O.C. AND 1½" FROM EACH END
13.	HARCO COUPLING	4" (6") NOMINAL SLIP JOINT COUPLING WITH RUBBER RING SEALS, SOCKET x SOCKET
14.	BRASS STREET 90° ELBOW	1" DIAMETER BRASS STREET 90° ELBOWS FIPT x FIPT
15.	HDPE INSULATED ARCTIC PIPE	4" X 12" (6" X 13") PRE INSULATED HDPE ARCTIC PIPE INTEGRATED HARCO COUPLING SYSTEM

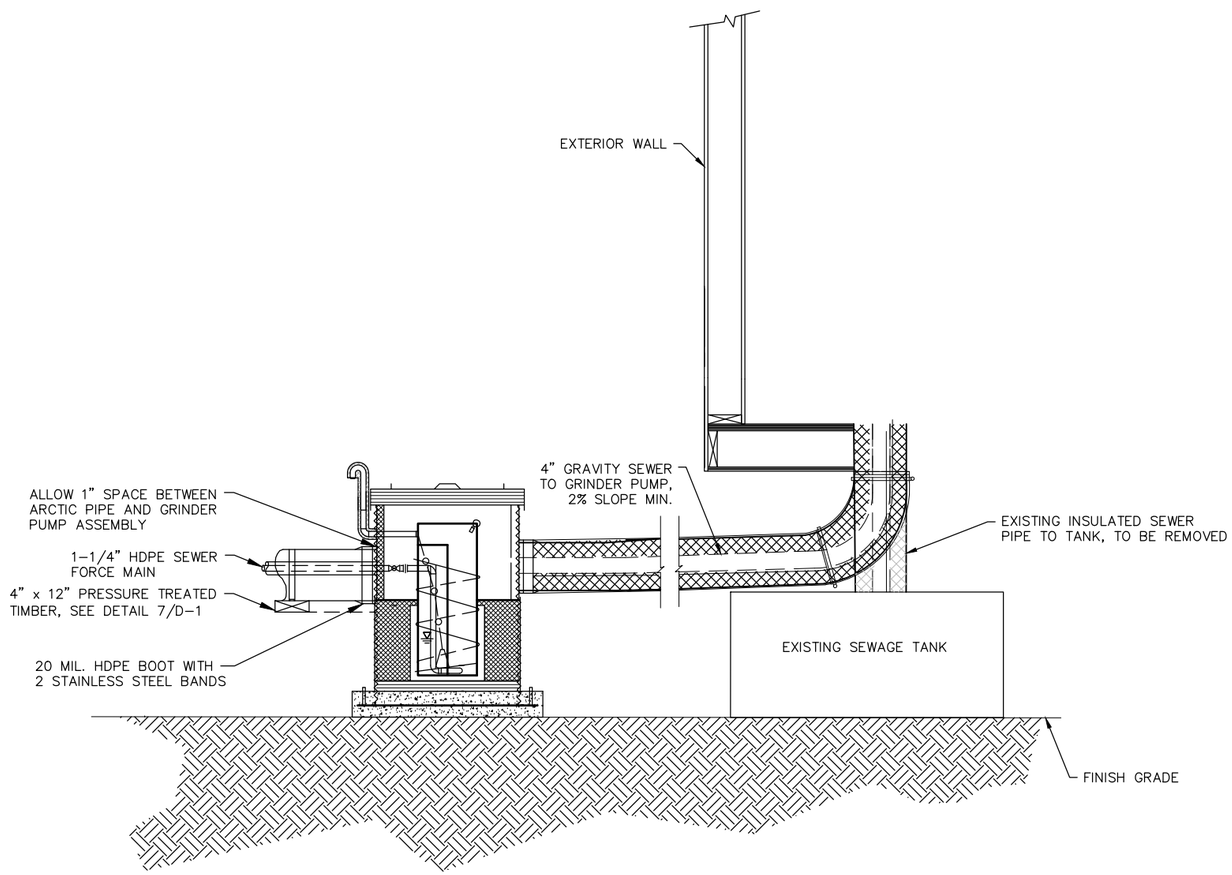

NOTE:
DEPENDING ON THE CLEARANCE BETWEEN THE TANK AND HOUSE FLOOR, THE TANK MAY HAVE TO GET CUT OUT OF PLACE TO MAKE SPACE FOR THE NEW PIPE SECTION CONNECTING TO THE GRINDER PUMP.

1 / D14 CONNECTING TO HOUSES WITH SEWER TANK BELOW HOUSE
NTS

NOTE:
CONTRACTOR SHALL COORDINATE WITH PROPERTY OWNER TO FIELD ENGINEER CONNECTION TO EACH RESIDENCE GIVEN SPECIFIC CONDITIONS AND CONFIGURATION OF PLUMBING.

35% SUBMITTAL

REVISIONS

REV	DATE	DESCRIPTION	BY

DOWL
WWW.DOWL.COM

BETHEL AVENUES PIPED WATER AND SEWER
BETHEL, ALASKA
SEWER TANK CONNECTION UNDER HOUSE
LEGAL DESCRIPTION
LOCATION

PROJECT 1529.50149.01
DATE 06/10/2020

© DOWL 2020

SHEET
D14

C:\Civil 3D Projects 2018\2018\29\50149-01\Civil\SC-CU-DT-50149-01.dwg PLOT DATE 2020-6-22 15:20 SAVED DATE 2020-06-22 15:15 USER: bmjos

1.	HDPE SERVICE LINE	(1" OR 2"ø) HDPE (PE 3408), SDR 11, 160 PSI MIN., NSF 61 APP. DRISCOPIPE 1000 OR EQUAL
2.	PIPE COUPLING BAND	NOMINAL 12" & 13" DIAMETER, 16 GA. ALUMINUM, SINGLE PIECE, 3–BOLT BAND.
3.	ARCTIC LONG SWEEP 90° BEND	NOMINAL 4" x 12" & 6" x 13" PRE–INSULATED HDPE, SDR 17, 90° LONG SWEEP (30" BEND RADIUS), HDPE JACKET, PUSH ON COUPLING x BEVELED END.
4.	ARCTIC BOOT	FERNCO ADH–13, 12" & 13" DIAMETER x 29" LONG ARCTIC DRAIN HOUSING WITH 8 BOLT UPPER RING 7/16" HOLES; FERNCO INC., DAVISON, MI (800–521–1283).
5.	TRANSITION FITTING	1" POLY–CAM STANDARD MPT TRANSITION FITTING, SDR 11
6.	LOCKABLE BALL VALVE	1" RED WHITE BALL VALVE W/ PADLOCK WINGS, 1" FIPT x FIPT.
7.	CONNECTION HOSE WITH ADAPTERS	3/4" I.D. NSF APPROVED POTABLE WATER HOSE TYPE PEX A, REHAUS OR EQUAL.
8.	ADJUSTABLE BANDS	STAINLESS STEEL, 1" WIDE, ADJUSTABLE.
9.	HEAT TRACE	5W/ FT, SELF LIMITING RAYCHEM TYPE 5XL1–CT, OR EQUAL.
10.	HEAT TRACE POWER CONNECTION	HEAT TRACE POWER CONNECTION KIT, RAYCHEM HTS WINTERGARD #H908 OR EQUAL. USE MANUFACTURER'S RECOMMENDED HEAT TRACE END SEAL FOR BELOW GROUND CONDITIONS.
11.	INSULATED ARCTIC BOX	INSULATED PLYWOOD ARCTIC BOX WITH HINGED LID AND REMOVABLE FRONT PANEL. FABRICATE DETAIL, SHEET C107 AND C108. APPROXIMATE SIZE = 8 CUBIC FEET.
12.	RUBBER WEATHER STRIP	1/8" THICK x 8" WIDE RUBBER WEATHER STRIP (55–65 DUROMETER EPDM). SECURE TO WALL ONLY WITH 1/8" x 1" STAINLESS STEEL WOOD SCREW AT 6" O.C. AND 1½" FROM EACH END
13.	HARCO COUPLING	4" (6") NOMINAL SLIP JOINT COUPLING WITH RUBBER RING SEALS, SOCKET x SOCKET
14.	BRASS STREET 90° ELBOW	1" DIAMETER BRASS STREET 90° ELBOWS FIPT x FIPT
15.	HDPE INSULATED ARCTIC PIPE	4" X 12" (6" X 13") PRE INSULATED HDPE ARCTIC PIPE INTEGRATED HARCO COUPLING SYSTEM

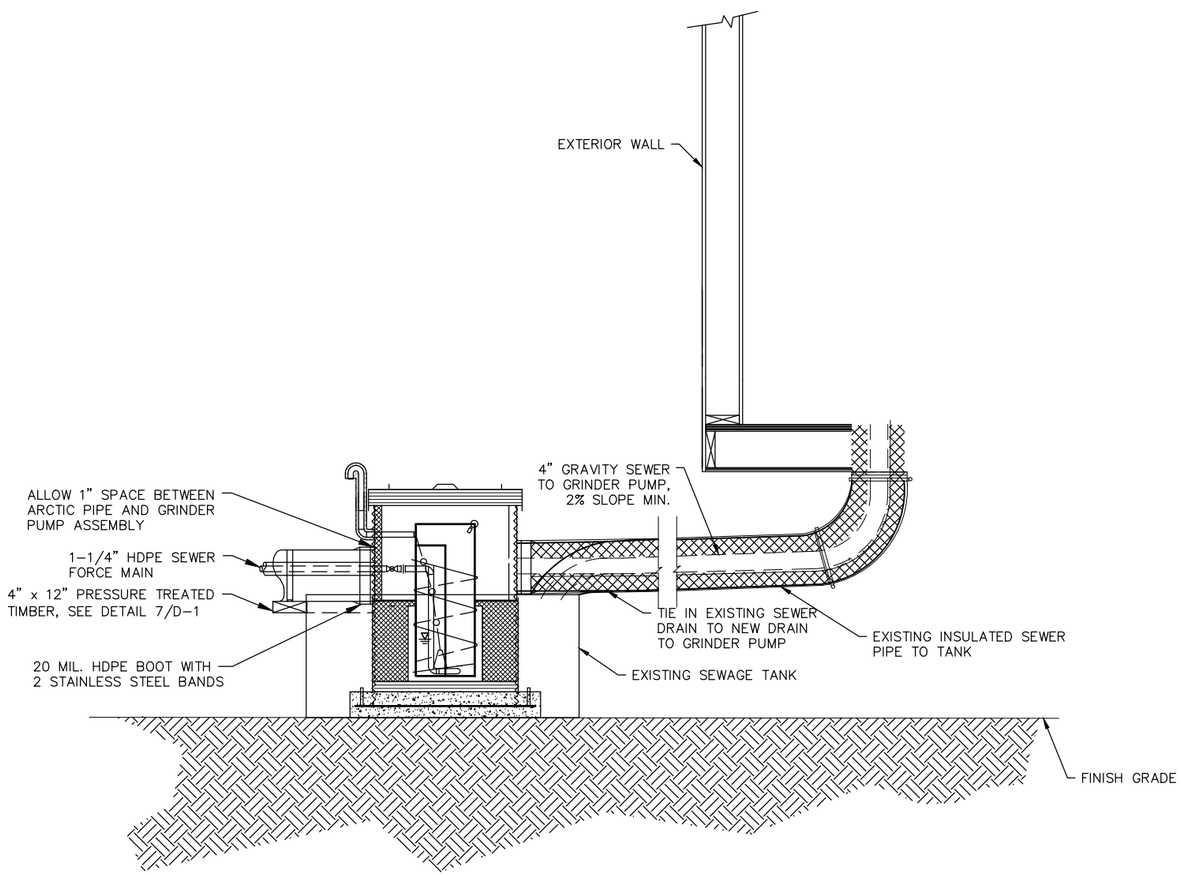

NOTE:
ACCESSIBLE SEWAGE TANKS WILL BE REMOVED, AND REPLACED WITH THE INDIVIDUAL GRINDER PUMP. REUSE EXISTING SEWER CONNECTION PIPE TO GREATEST EXTENT POSSIBLE.

1 / D15 CONNECTING TO HOUSES WITH SEWER TANK NEXT TO HOUSE
NTS

NOTE:
CONTRACTOR SHALL COORDINATE WITH PROPERTY OWNER TO FIELD ENGINEER CONNECTION TO EACH RESIDENCE GIVEN SPECIFIC CONDITIONS AND CONFIGURATION OF PLUMBING.

35% SUBMITTAL

REV	DATE	REVISIONS DESCRIPTION	BY

DOWL
WWW.DOWL.COM

BETHEL AVENUES PIPED WATER AND SEWER
BETHEL, ALASKA
SEWER TANK CONNECTION NEXT TO HOUSE
LEGAL DESCRIPTION
LOCATION

PROJECT 1529.50149.01
DATE 06/10/2020

© DOWL 2020

SHEET
D15

C:\Civil 3D Projects 2018\2018\29\50149-01\Civil\SC-CU-DT-50149-01.dwg PLOT DATE 2020-6-22 15:20 SAVED DATE 2020-06-22 15:15 USER: bmjos

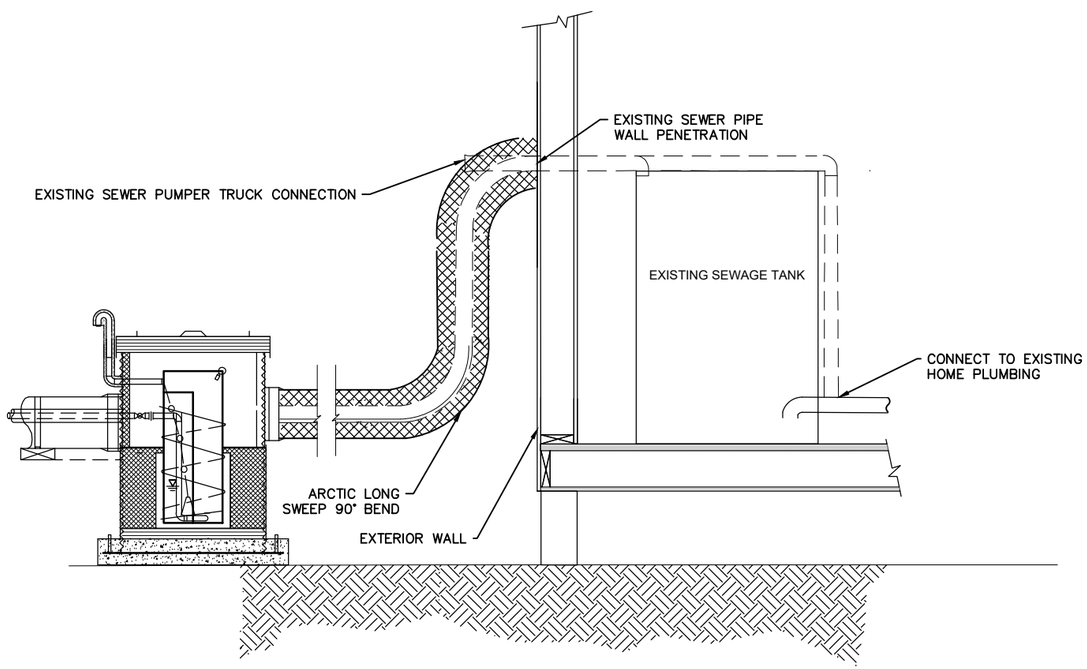

SEWER TANK THROUGH HOUSE WALL

NOTE:
CONTRACTOR SHALL COORDINATE WITH PROPERTY OWNER TO FIELD ENGINEER CONNECTION TO EACH RESIDENCE GIVEN SPECIFIC CONDITIONS AND CONFIGURATION OF PLUMBING.

1 / D16 CONNECTING TO HOUSES WITH SEWER TANK THROUGH WALL
NTS

35% SUBMITTAL

REV	DATE	REVISIONS DESCRIPTION	BY

DOWL
WWW.DOWL.COM

BETHEL AVENUES PIPED WATER AND SEWER
BETHEL, ALASKA
SEWER TANK CONNECTION THROUGH WALL

LEGAL DESCRIPTION
LOCATION

PROJECT 1529.50149.01
DATE 06/10/2020

© DOWL 2020

SHEET
D16

C:\Civil 3D Projects 2018\2018\29\50149-01\Civil\SC-CU-DT-50149-01.dwg PLOT DATE 2020-6-22 16:12 SAVED DATE 2020-06-22 14:45 USER: keller