City of Bethel
Port Commission Agenda

Special Meeting
Wednesday January 24, 2018 - 7 pm
City Council Chambers, City Hall, Bethel, AK

Commissioners
Alan Murphy
Chair
Term Expires 2018
(907)543-2805

Richard Pope
Port Commissioner
Term Expires 2020
(907)543-1900
bethelalaskapc@gci.net

Thomas Oosterman
Port Commissioner
Term Expires 2020
(907)545-6420

Rick Robb
Council Rep.
Term Expires 2019
(907)545-6026
rrobb@cityofbethel.net

Ex-Officio
Allen Wold
Port Director
(907)543-2310
awold@cityofbethel.net

Ed Flores
Port Admin
(907)543-2310
eflores@cityofbethel.net

i. **CALL TO ORDER**

ii. **ROLL CALL**

iii. **PEOPLE TO BE HEARD**

iv. **APPROVAL OF AGENDA**

v. **APPROVAL OF MINUTES FROM THE REGULAR MEETINGS**
-APPROVAL OF MINUTES FROM regular meetings in September2017, November 2017, December 2017 and January 2018

vi. **SPECIAL ORDER OF BUSINESS**

vii. **DEPARTMENT HEAD COMMENTS**

viii. **UNFINISHED BUSINESS**
- Port Office update
- FY18 budget items

ix. **NEW BUSINESS**

x. **COMMISSION MEMBER'S COMMENTS**

xi. **ADJOURNMENT**

Attest: _____
Ed Flores – Commission Recorder

City of Bethel Port Commission Meeting Minutes

September 18, 2017 Regular Meeting 7 p.m. Bethel, Alaska

I. CALL TO ORDER
MEETING CALLED TO ORDER AT 1905 (7:05 P.M.)

II. ROLL CALL
COMMISSIONERS PRESENT:
Chairman Murphy
Comm. Pope
Comm. Welch
Comm. Oosterman

III. PEOPLE TO BE HEARD
None

IV. APPROVAL OF AGENDA

MOVED:	Comm. Welch	Approval of agenda
SECONDED:	Comm. Pope	
VOTE ON MAIN MOTION	4-0 All in favor	

V. APPROVAL OF MINUTES

MOVED:	Comm. Pope	Approval of minutes from May, June, & August 2017
SECONDED:	Comm. Welch	
VOTE ON MAIN MOTION	4-0 All in favor	

VI. SPECIAL ORDER OF BUISNESS

VII. PORT DIRECTOR'S REPORT
The Port Director submitted verbal report to accompany the written documentation.

VIII. UNFINISHED BUISNESS
Port Office Update – the progress of the Port Office was discussed, as well as furniture.
Bethel Bank Stabilization Project(BBSP) – Updates on the BBSP for the upcoming summer (2018) work on the East Addition.

IX. NEW BUSINESS
Possible Port Commission Meeting Time Change – the idea was discussed and the Commission decided to make no changes to the Meeting time.

X. COMMISSION REPRESENTATIVES COMMENTS

Comm. Oosterman – Nothing comes to mind.
Comm. Pope – likes that we are looking for ways to improve all Port Facilities.
Comm. Welch – Commissioners last meeting as a City Council Representative. Will be looking to reapply for the Port Commission.
Comm. Murphy – People are not keeping their dogs on leashes.

XI. ADJOURNMENT

MOVED:	Comm. Pope	Motion to Adjourn
SECONDED:	Comm. Welch	
VOTE ON MAIN MOTION	4-0 All in favor	

Meeting Adjourned at 1938 (7:38 p.m.)

Respectfully Submitted:

_____
Alan Murphy, Chairman

APPROVED THIS _____ day of_____ 2017.

ATTEST: _____

City of Bethel Port Commission Meeting Minutes

November 20, 2017 Regular Meeting 7 p.m. Bethel, Alaska

I. CALL TO ORDER
MEETING CALLED TO ORDER AT 1915 (7:15 P.M.)
NO QUORUM

II. ROLL CALL
COMMISSIONERS PRESENT:
COMM. ROBB

III. PEOPLE TO BE HEARD

IV. APPROVAL OF AGENDA

V. APPROVAL OF MINUTES

VI. SPECIAL ORDER OF BUISNESS

VII. PORT DIRECTOR'S REPORT

VIII. UNFINISHED BUISNESS

IX. NEW BUSINESS

X. COMMISSION REPRESENTATIVES COMMENTS

XI. ADJOURNMENT

Respectfully Submitted:

_____
Alan Murphy, Chairman

APPROVED THIS _____ day of_____ 2017.

ATTEST: _____

City of Bethel Port Commission Meeting Minutes

December 18, 2017 Regular Meeting 7 p.m. Bethel, Alaska

I. CALL TO ORDER
MEETING CALLED TO ORDER AT 1912 (7:12 P.M.)
NO QUORUM

II. ROLL CALL
COMMISSIONERS PRESENT:
COMM. MURPHY

III. PEOPLE TO BE HEARD

IV. APPROVAL OF AGENDA

V. APPROVAL OF MINUTES

VI. SPECIAL ORDER OF BUISNESS

VII. PORT DIRECTOR'S REPORT

VIII. UNFINISHED BUISNESS

IX. NEW BUSINESS

X. COMMISSION REPRESENTATIVES COMMENTS

XI. ADJOURNMENT

Respectfully Submitted:

_____
Alan Murphy, Chairman

APPROVED THIS _____ day of_____ 2017.

ATTEST: _____

City of Bethel Port Commission Meeting Minutes

January 15, 2017 Regular Meeting 7 p.m. Bethel, Alaska

I. CALL TO ORDER
MEETING CALLED TO ORDER AT 1918 (7:18 P.M.)
NO QUORUM

II. ROLL CALL
COMMISSIONERS PRESENT:
COMM. ROBB
COMM. OOSTERMAN
COMM. POPE

III. PEOPLE TO BE HEARD

IV. APPROVAL OF AGENDA

V. APPROVAL OF MINUTES

VI. SPECIAL ORDER OF BUISNESS

VII. PORT DIRECTOR'S REPORT

VIII. UNFINISHED BUISNESS

IX. NEW BUSINESS

X. COMMISSION REPRESENTATIVES COMMENTS

XI. ADJOURNMENT

Respectfully Submitted:

_____
Alan Murphy, Chairman

APPROVED THIS _____ day of_____ 2017.

ATTEST: _____

PORT OF BETHEL

Post Office Box 1388
Bethel, Alaska 99559
Voice: 907-543-2310
Fax: 907-543-2311

TO: Peter Williams, City Manager

FROM: Allen Wold, Port Director

SUBJECT: December 2017 Managers Report

- **Small Boat Harbor**
  -Cleaned embankments and everywhere else in the SBH.
  -Put notices on vehicles left in the SBH. SBH is not a storage area.

- **City Dock/Beach 1**
  -Customers are still in and out of the Dock getting to their stored containers.
  -Plow snow off the Dock with loader.

- **Port Office**
  -TC Construction came out in December to finish touch up work.
  -Waiting on Pro Dev on the amount we have left over.
  -Plow snow off parking lot and sand icy areas.
  -Working around the Port Office (Cut the lid off the overflow for the water, getting all the essentials, getting quotes on furniture)

- **Admin**
  -Monthly Storage billing for customers.
  -1 Worker has been helping out the Public Works Department to help with the water and sewer.
  -Brought a connex donated by the City to Covenant Church with Dumptruck and Trailer and also used loader.
  -Checking mail daily at 3pm.
  -Left Ed Flores as acting Port Director while on vacation.

- **Seawall**
  -Fixing Cable Fencing/Welding new posts for cable fencing.
  -Picking up around dumpsters daily.
  -Cleared the Float Plane Area of boats and drift for access to the river.

- **East Addition**
  -Utility poles are being uses as barricades. People have knocked over the poles.

- **Misc./Vehicles**
  -Safety checks along the seawall
  -Picking up as needed where needed.
  -Safety Meetings.
  -Winterizing vehicles.

CITY OF BETHEL
REVENUES WITH COMPARISON TO BUDGET
FOR THE 6 MONTHS ENDING DECEMBER 31, 2017

MUNICIPAL DOCK

		ENCUMBRANCE	YTD ACTUAL	TOTAL	BUDGET	UNEARNED	PCNT
	INTEREST & PENALITIES						
52-40-403	CITY DOCK-PENALTIES & INT	.00	.00	.00	5,000.00	5,000.00	
	TOTAL INTEREST & PENALITIES	.00	.00	.00	5,000.00	5,000.00	
	CHARGES FOR SERVICES						
52-43-402	CITY DOCK-STORAGE	.00	14,877.44	14,877.44	70,000.00	55,122.56	21
52-43-404	CITY DOCK-PERMITS	.00	.00	.00	3,000.00	3,000.00	
52-43-405	CITY DOCK-WHARFAGE	.00	140,719.43	140,719.43	150,000.00	9,280.57	93
52-43-407	CITY DOCK-DOCKAGE	.00	11,903.04	11,903.04	25,000.00	13,096.96	47
52-43-418	SBH PETRO PORT-FUEL THRU-PUT	.00	113,853.86	113,853.86	220,000.00	106,146.14	51
52-43-424	PETRO YARD - STORAGE	.00	1,536.00	1,536.00	2,000.00	464.00	76
52-43-426	PETRO PORT-FUEL THRU-PUT	.00	227,167.78	227,167.78	440,000.00	212,832.22	51
52-43-427	PETRO PORT-DOCKAGE	.00	10,965.29	10,965.29	20,000.00	9,034.71	54
52-43-433	SEAWALL MOORAGE	.00	.00	.00	31,200.00	31,200.00	
52-43-434	SEAWALL DOCKAGE	.00	7,067.13	7,067.13	20,000.00	12,932.87	35
52-43-435	SEAWALL-WHARFAGE	.00	.00	.00	1,000.00	1,000.00	
52-43-454	BEACH-STORAGE	.00	5,410.56	5,410.56	50,000.00	44,589.44	10
52-43-455	BEACH-WHARFAGE	.00	74,431.58	74,431.58	70,000.00	(4,431.58)	106
52-43-457	BEACH-DOCKAGE	.00	15,072.22	15,072.22	17,000.00	1,927.78	88
52-43-462	BOAT HARBOR-STORAGE	.00	.00	.00	3,500.00	3,500.00	
52-43-463	BOAT HARBOR-MOORAGE	.00	724.56	724.56	24,000.00	23,275.44	3
	TOTAL CHARGES FOR SERVICES	.00	623,728.89	623,728.89	1,146,700.00	522,971.11	54
	LEASE REVENUE						
52-44-467	LEASE REVENUE	.00	6,090.00	6,090.00	24,000.00	17,910.00	25
	TOTAL LEASE REVENUE	.00	6,090.00	6,090.00	24,000.00	17,910.00	25
	MISCELLANEOUS						
52-45-464	SMALL BOAT HARBOR PERMITS	.00	1,020.00	1,020.00	24,000.00	22,980.00	4
52-45-467	EXTRA WATER CALLS	.00	9,624.00	9,624.00	25,000.00	15,376.00	38
	TOTAL MISCELLANEOUS	.00	10,644.00	10,644.00	49,000.00	38,356.00	21
	MISCELLANEOUS						
52-49-487	INVESTMENT INCOME	.00	.00	.00	20,599.00	20,599.00	
52-49-495	MISCELLANEOUS REVENUE	.00	1,950.00	1,950.00	5,000.00	3,050.00	39
	TOTAL MISCELLANEOUS	.00	1,950.00	1,950.00	25,599.00	23,649.00	7
	TOTAL FUND REVENUE	.00	642,412.89	642,412.89	1,250,299.00	607,886.11	51

CITY OF BETHEL
REVENUES WITH COMPARISON TO BUDGET
FOR THE 6 MONTHS ENDING DECEMBER 31, 2017

MUNICIPAL DOCK

ENCUMBRANCE	YTD ACTUAL	TOTAL	BUDGET	UNEARNED	PCNT

CITY OF BETHEL
EXPENDITURES WITH COMPARISON TO BUDGET
FOR THE 6 MONTHS ENDING DECEMBER 31, 2017

MUNICIPAL DOCK

		ENCUMBRANCE	YTD ACTUAL	TOTAL	BUDGET	UNEXPENDED
	DOCK EXPENDITURES					
52-50-501	SALARIES	.00	74,613.47	74,613.47	194,845.00	120,231.53
52-50-502	OVERTIME	.00	1,904.74	1,904.74	2,000.00	95.26
52-50-508	LEAVE CASHOUT	.00	.00	.00	8,700.00	8,700.00
52-50-510	SOCIAL SECURITY EXPENSE	.00	402.38	402.38	1,417.00	1,014.62
52-50-511	MEDICARE FICA	.00	1,137.97	1,137.97	2,854.00	1,716.03
52-50-512	EMPLOYEE GROUP BENEFITS	.00	18,813.49	18,813.49	65,318.00	46,504.51
52-50-515	UNEMPLOYMENT	.00	.00	.00	2,462.00	2,462.00
52-50-516	WORKERS' COMPENSATION	.00	.00	.00	8,318.00	8,318.00
52-50-518	PERS	.00	14,150.68	14,150.68	43,306.00	29,155.32
52-50-519	UTILITY BENEFIT	.00	2,053.80	2,053.80	11,491.00	9,437.20
52-50-545	TRAINING/TRAVEL	.00	996.93	996.93	5,000.00	4,003.07
52-50-561	SUPPLIES	.00	1,968.66	1,968.66	5,500.00	3,531.34
52-50-563	WEARING APPAREL	.00	249.41	249.41	1,300.00	1,050.59
52-50-601	VEHICLE MT	.00	637.77	637.77	4,000.00	3,362.23
52-50-602	GASOLINE/DIESEL/OIL	.00	6,128.90	6,128.90	18,000.00	11,871.10
52-50-621	ELECTRICITY	.00	2,090.80	2,090.80	15,000.00	12,909.20
52-50-622	TELEPHONE	.00	404.89	404.89	1,000.00	595.11
52-50-623	HEATING FUEL	.00	463.58	463.58	2,000.00	1,536.42
52-50-624	WATER, SEWER, GARBAGE	.00	6,559.03	6,559.03	12,000.00	5,440.97
52-50-626	WATER FOR BARGES	.00	4,438.29	4,438.29	12,000.00	7,561.71
52-50-627	STAFF CELLULAR PHONES	.00	374.11	374.11	.00	(374.11)
52-50-642	LEGAL FEES	.00	.00	.00	5,000.00	5,000.00
52-50-643	PLANNING/ENGINEERING FEES	.00	.00	.00	5,000.00	5,000.00
52-50-661	VEHICLE MAINT/REPAIR	.00	2,687.75	2,687.75	3,037.00	349.25
52-50-666	MUNICIPAL DOCK MAINT.	.00	1,534.50	1,534.50	5,000.00	3,465.50
52-50-667	MAINT-SEAWALL	.00	6,989.06	6,989.06	7,000.00	10.94
52-50-668	MAINT SMALL BOAT HARBOR	.00	.00	.00	4,000.00	4,000.00
52-50-669	OTHER PURCHASED SERVICES	.00	664.57	664.57	24,000.00	23,335.43
52-50-683	MINOR EQUIPMENT	.00	1,809.02	1,809.02	19,000.00	17,190.98
52-50-687	LAND/EASEMENT ACQUISITION	.00	5,588.75	5,588.75	30,000.00	24,411.25
52-50-696	WATERFRONT FACILIITIES IMPROV	.00	.00	.00	25,000.00	25,000.00
52-50-721	INSURANCE	.00	827.45	827.45	16,000.00	15,172.55
52-50-724	DUES	.00	.00	.00	1,000.00	1,000.00
52-50-727	ADVERTISING	.00	169.60	169.60	1,000.00	830.40
52-50-736	BANK CHARGES	.00	91.09	91.09	.00	(91.09)
52-50-775	MUNICIPAL DOCK GRAVEL	.00	69,848.04	69,848.04	55,000.00	(14,848.04)
52-50-777	CONTAMINATED SOIL PROCESSING	.00	.00	.00	1,000.00	1,000.00
52-50-799	MISCELLANEOUS EXPENSES	.00	97.62	97.62	.00	(97.62)
52-50-990	XFER OUT	.00	.00	.00	50,000.00	50,000.00
52-50-996	ADMIN OVERHEAD-IT SVCS	.00	11,500.45	11,500.45	21,887.00	10,386.55
52-50-998	ADMINISTRATIVE OVERHEAD-GF	.00	20,103.00	20,103.00	61,126.00	41,023.00
	TOTAL DOCK EXPENDITURES	.00	259,299.80	259,299.80	750,561.00	491,261.20
	SMALL BOAR HARBOR					
52-55-501	SALARIES	.00	58,399.77	58,399.77	97,676.00	39,276.23
52-55-502	OVERTIME	.00	1,747.85	1,747.85	3,000.00	1,252.15
52-55-508	LEAVE CASHOUT	.00	.00	.00	1,268.00	1,268.00
52-55-510	SOCIAL SECURITY	.00	2,917.27	2,917.27	4,483.00	1,565.73
52-55-511	MEDICARE FICA	.00	859.33	859.33	1,460.00	600.67

CITY OF BETHEL
EXPENDITURES WITH COMPARISON TO BUDGET
FOR THE 6 MONTHS ENDING DECEMBER 31, 2017

MUNICIPAL DOCK

		ENCUMBRANCE	YTD ACTUAL	TOTAL	BUDGET	UNEXPENDED	P
52-55-512	EMPLOYEE GROUP BENEFITS	.00	5,108.05	5,108.05	12,442.00	7,333.95	4
52-55-515	UNEMPLOYMENT	.00	292.62	292.62	2,245.00	1,952.38	
52-55-516	WORKERS' COMPENSATION	.00	.00	.00	4,254.00	4,254.00	
52-55-518	PERS	.00	2,592.42	2,592.42	22,149.00	19,556.58	
52-55-519	UTILITY BENEFIT	.00	228.20	228.20	2,189.00	1,960.80	
52-55-561	SUPPLIES	.00	1,199.03	1,199.03	1,800.00	600.97	
52-55-563	WEARING APPAREL	.00	1,135.59	1,135.59	1,700.00	564.41	
52-55-602	GASOLINE	.00	6,474.67	6,474.67	7,000.00	525.33	
52-55-621	ELECTRICITY	.00	.00	.00	2,000.00	2,000.00	
52-55-624	WATER/SEWR/GARBAGE	.00	.00	.00	10,500.00	10,500.00	
52-55-668	SMALL BOAT HARBOR MAINTENANCE	.00	537.48	537.48	7,000.00	6,462.52	
52-55-683	MINOR EQUIPMENT	.00	227.02	227.02	1,000.00	772.98	
52-55-775	SMALL BOAT HARBOR GRAVEL	.00	2,099.04	2,099.04	16,000.00	13,900.96	
52-55-799	MISCELLANEOUS EXPENSES	.00	.00	.00	250.00	250.00	
52-55-998	ADMINISTRATIVE OVERHEAD-GF	.00	15,426.00	15,426.00	27,120.00	11,694.00	
	TOTAL SMALL BOAR HARBOR	.00	99,244.34	99,244.34	225,536.00	126,291.66	
	TOTAL FUND EXPENDITURES	.00	(283,868.75)	(283,868.75)	(274,202.00)	9,666.75	

TECPRO
SOLUTIONS

Bringing Technology to Life...

PROPOSAL

A Technical Proposal for:
City of Bethel

Description: City of Bethel Port office Surveillance System

Allen Wold
907-543-2310
awold@cityofbethel.net

Prepared By:
Daniel Thompson
Tec Pro Ltd.
907-350-0101
daniel.thompson@tecpro.com

TECPRO SOLUTIONS

816 E. Whitney Rd, Anchorage, AK 99501
907.348.1800 • F: 855.348.1830 • info@tecpro.com

TecPro was founded in 1997 as a Certified Woman Owned Small Business. The company operates in the speciality contracting and technical industries: Energy and Automation (Electrical Contracting & Industrial Controls), Security (Access Control, Alarm Systems, Camera Systems). We integrate seamless enterprise level IT & security systems, software, hardware and offer turn-key installations as a licensed general contractor.

Benefits of TecPro Vision Systems and Cameras

- Increased Resolution Reduces Amount of Cameras Needed: High resolution image sensors give a better overview and allow monitoring an entire room with just one camera with no blind spots.
- Robust and Practically Maintenance Free. Reinforced composite housing with built in cable protection and no mechanical moving parts (no auto iris) guarantees longevity. We have had cameras in the harshest conditions in Alaska for over 7 years with very few failures. When other CCTV systems fail, ours will still be working.
- Software for all Cameras and Storage Devices Included: Standard with these cameras is an included video management system. Digital changes fast but our system includes a lifetime of free updates.
- Reduced Installation Costs At Any Distance: Our systems are full IP and use of standard network components such as copper, fiber, and wireless. No need to run additional expensive power cables.
- Hemispheric Technology: The 360 degree Hemispheric cameras offer an all around view with image correction for perspective; only one camera is needed to view the entire room without any blind spots.
- Day or Night: We have cameras that can be used in day or night (low-light) conditions and can automatically adjust for best picture.

Our cameras are the best in the business – bar none. It may be a larger investment on the front end, but because it uses a decentralized system it is much cheaper in the long run to be able to add to your system. And the cost benefit of having a quality product that will not fail on you saves you money.
We offer 3rd Party Lease Options to amortize your investment over time. TecPro also offers Complete System Service Agreements to make operating and maintaining your system completely hassle free.

Project Summary

TecPro will provide the following:

TecPro will install a four camera Mobotix system for the City of Bethel Port Office. This will include four Mx-M16A cameras with 2 day/night B016 sensor module attachment for overview hemispheric shots. TecPro will also install a 24 Port POE switch in the port office network room that will take up 2U of space on the server rack. TecPro will also install a Synology DS916+ NAS(Network Attached Storage Device) that will take 4U of space on the server rack and will have 18 TB of storage with one 6TB hard drive set up as a backup drive. All head end equipment is being sized for potential additions to the camera system. All the cable will run in conduit to its respected mounting locations.

C01 - Mx-16A With Day B016 and Night B016
C02 - Mx-16A With Day B016 and Night B016
C03 - Mx-16A With Day B016 and Night B016
C04 - Mx-16A With Day B016 and Night B016

At the end of the install TecPro will provide a detailed training on the VMS(Video Management Software).

Conditions & Exclusions

Customer to provide the following:
Access to site during normal business hours Monday through Friday 8:00 AM to 5:00 PM.
Network Information for camera system.(IP addresses of cameras, DNS info)
Names of each Individual camera.
Recording information.(Motion or Continuous)
Desired resolution of the cameras.
Ride to and from airport.
A PC to view and control camera operations.
Conduit to camera mounting location.
Space in network room for head end equipment.

Total For Proposed Solution: $ 19,291.05

We require is a 50% deposit and an authorized signature on this proposal to schedule your installation. Lease options available. Please contact us with any questions. This proposal is valid until 12/01/2017.

AXIS P3367-VE Network Camera

5-megapixel, light-sensitive with remote focus and zoom

AXIS P3367-VE is a fixed dome network camera that offers superb video performance in HDTV 1080p/5 MP resolution. It complies with the SMPTE 274M standard and can cover a large area with exceptional detail and light sensitivity. Wide dynamic range and day/night functionality provides high image quality even in low-light conditions. With multi-view streaming, the full view and up to 8 individually cropped out view areas can be streamed simultaneously. AXIS P3367-VE has support for digital pan/tilt/zoom, two-way audio, audio detection and input/output ports for external devices. With its weather-proof and vandal-resistant casing, it is perfectly adapted for harsh environments.

- > **HDTV 1080p/5 MP**
- > **P-Iris control**
- > **Remote zoom and focus**
- > **I/O ports and two-way audio**
- > **Outdoor-ready and IK10 vandal-resistance**

AXIS P3367-VE Network Camera

Camera	
Image sensor	Progressive scan RGB CMOS 1/3.2"
Lens	3-9 mm, F1.2 Horizontal field of view: 84°-30° Vertical field of view: 63°-22° Varifocal, Remote focus and zoom, P-Iris control, IR corrected
Day and night	Automatically removable infrared-cut filter
Minimum illumination	Color: 0.2 lux, F1.2, B/W: 0.04 lux, F1.2
Shutter time	1/28000 s to 2 s
Camera angle adjustment	Pan 360°, Tilt 160°, Rotation 340°
Video	
Video compression	H.264 Baseline and Main Profile (MPEG-4 Part 10/AVC) Motion JPEG
Resolutions	2592x1944 (5 MP) to 160x90
Frame rate	2 MP 4:3 (1600x1200) and HDTV 1080p (1920x1080) capture modes: 30 fps in all resolutions, 3 MP capture mode: 20 fps in all resolutions, 5 MP capture mode: 12 fps in all resolutions
Video streaming	Multiple, individually configurable streams in H.264 and Motion JPEG Controllable frame rate and bandwidth VBR/MBR H.264
Multi-view streaming	Up to 8 individually cropped out view areas When streaming 4 view areas and 1 overview in VGA resolution, the frame rate is 12 fps per stream (5 MP capture mode) or 20 fps per stream (3 MP capture mode)
Pan/Tilt/Zoom	Digital PTZ Preset positions, guard tour
Image settings	Compression, color, brightness, sharpness, contrast, white balance, exposure control, exposure zones, fine tuning of behavior at low light, text and image overlay, mirroring of images, privacy mask Rotation 0°, 90°, 180°, 270°, including Corridor Format Wide Dynamic Range - dynamic contrast
Audio	
Audio streaming	Two-way audio
Audio compression	AAC LC 8/16 kHz, G.711 PCM 8 kHz, G.726 ADPCM 8 kHz Configurable bit rate
Audio input/output	External microphone input or line input, Line output
Network	
Security	Password protection, IP address filtering, HTTPS[a] encryption, IEEE 802.1X[a] network access control, Digest authentication, User access log
Supported protocols	IPv4/v6, HTTP, HTTPS[a], SSL/TLS[a], QoS Layer 3 DiffServ, FTP, CIFS/SMB, SMTP, Bonjour, UPnP™, SNMPv1/v2c/v3 (MIB-II), DNS, DynDNS, SFTP, NTP, RTSP, RTP, TCP, UDP, IGMP, RTCP, ICMP, DHCP, ARP, SOCKS, SSH
System integration	
Application Programming Interface	Open API for software integration, including VAPIX® and AXIS Camera Application Platform, specifications at *www.axis.com* AXIS Video Hosting System (AVHS) with One-Click Connection ONVIF® Profile S and ONVIF® Profile G, specification at *www.onvif.org*
Analytics	**Included** AXIS Video Motion Detection, active tampering alarm, audio detection **Supported** AXIS Cross Line Detection, AXIS Perimeter Defender AXIS Digital Autotracking Support for AXIS Camera Application Platform enabling installation of third-party applications, see *www.axis.com/acap*
Event triggers	Analytics, edge storage events, external input
Event actions	File upload: FTP, FTPS, HTTP, HTTPS, network share and email Notification: email, HTTP, HTTPS and TCP Video recording to edge storage Pre- and post-alarm video buffering External output activation, audio recording to edge storage, play audio clip Preset positions, guard tour
Data streaming	Event data
Built-in installation aids	Remote zoom, remote focus, pixel counter
General	
Casing	Polycarbonate transparent dome, auminum inner camera module with encapsulated electronics IP66- and NEMA 4X-rated, IK10 impact-resistant casing with aluminum base and dehumidifying membrane Color: White NCS S 1002-B. For repainting instructions and impact on warranty, contact your Axis partner.
Sustainability	PVC free
Memory	512 MB RAM, 128 MB Flash
Power	Power over Ethernet IEEE 802.3af/802.3at Type 1 Class 3 Max 12.1 W
Connectors	RJ45 10BASE-T/100BASE-TX PoE Terminal block for 1 alarm input and 1 output, 3.5 mm mic/line in, 3.5 mm line out
Storage	Support for SD/SDHC/SDXC card Support for SD card encryption Support for recording to network-attached storage (NAS) For SD card and NAS recommendations see *www.axis.com*
Operating conditions	-40 °C to 55 °C (-40 °F to 131 °F) Humidity 10-100% RH (condensing)
Storage conditions	-40 °C to 65 °C (-40 °F to 149 °F)
Approvals	EN 55022 Class B, EN 61000-6-1, EN 61000-6-2, EN 55024, FCC Part 15 Subpart B Class B, ICES-003 Class B, VCCI Class B, RCM AS/NZS CISPR 22 Class B, KCC KN22 Class B, KN24, EN 50581, IEC 60068-2-1, IEC 60068-2-2, IEC 60068-2-14, IEC 60068-2-27, IEC 60068-2-64, IEC 60068-2-78 EN 50121-4, IEC 62236-4, IEC/EN/UL 60950-22, IEC 62262 IK10, IEC/EN 60529 IP66, NEMA 250 Type 4X
Weight	1.7 kg (3.7 lb), with weather shield
Dimensions	Ø178 x 117 (Ø7 x 4 5/8 in)
Included accessories	Installation Guide, Windows decoder 1-user license, Resistorx® L-key, drill hole template Connector kit, mounting bracket, smoked dome, weather shield, 5 m (16 ft) network cable with pre-mounted gasket
Video management software	AXIS Companion, AXIS Camera Station, Video management software from Axis' Application Development Partners available on *www.axis.com/support/downloads*
Languages	English, German, French, Spanish, Italian, Russian, Simplified Chinese, Japanese, Korean, Portuguese, Traditional Chinese
Warranty	Axis 3-year warranty and AXIS Extended Warranty option, see *www.axis.com/warranty*

a. *This product includes software developed by the OpenSSL Project for use in the OpenSSL Toolkit (http://www.openssl.org/), and cryptographic software written by Eric Young (eay@cryptsoft.com).*

Environmental responsibility:

www.axis.com/environmental-responsibility

©2014 - 2017 Axis Communications AB. AXIS COMMUNICATIONS, AXIS, and VAPIX are registered trademarks or trademark applications of Axis AB in various jurisdictions. All other company names and products are trademarks or registered trademarks of their respective companies. We reserve the right to introduce modifications without notice.

AXIS COMMUNICATIONS

Cat®
308E2 CR

Mini Hydraulic Excavator with Swing Boom

FEATURES:

The Cat® 308E2 CR Mini Hydraulic Excavator delivers high performance, durability and versatility in a compact design to help you work in a variety of applications. The 308E2 CR features the following:

QUALITY

- The durable hoods and frame and the compact radius design of the 308E2 CR let you work comfortably and confidently in confined areas.
- The operator environment includes a high quality suspension seat, easy to adjust armrests and 100% pilot controls which offer consistent and long-lasting controllability.

EFFICIENCY

- High Definition Hydraulic System provides a load sensing and flow sharing capability leading to operational precision, efficient performance and greater controllability.
- Power on Demand provides optimal efficiency and performance the moment you need it. This automatic system ensures fuel efficiency through appropriate engine rating to meet all operational needs as required.

VERSATILITY

- Broad range of Cat Work Tools make the Cat Mini Excavator a versatile machine, able to meet the requirements of any job site.
- 180 degrees of bucket rotation provides greater material retention during truck loading and easier flat wall digging without having to reposition the machine.

PERFORMANCE

- Front shovel bucket orientation provides the operator with more ways to get the job done faster.
- COMPASS Control Panel is a standard feature that allows the operator to easily adjust auxiliary flows to achieve the optimal work tool performance, activate auto idle for improved fuel efficiency and utilize the security system to ensure protection of valuable assets with the simple touch of a button.
- The Site Reference System included in the COMPASS monitor provides output from pitch and roll sensors to aid in grading and level trenching. This impacts accuracy and productivity for job site finishing.
- Rearview camera improves operator productivity and efficiency through increased visibility, making work easier to complete.

SERVICEABILITY

- Convenient service and maintenance requirements include ease of access to daily check points, 500 hour engine oil and filter change period, 500 hour grease interval on front implement, S·O·S℠ oil sampling valve and overall long term durability.

SAFETY

- All Cat Mini Excavators from 3.5 metric tons to 8 metric tons are ROPS, TOPS and Top Guard Level II certified and include the Cat Interlock (hydraulic lockout) System, a certified accumulator which allows for auxiliary pressure to be released, making connecting and disconnecting work tools safer and easier, and a travel alarm. All of these safety features are standard on the E2 model lineup (travel alarm optional in Europe).

Specifications

Engine

Engine Model	Cat C3.3B*	
Rated Net Power @ 2,400 rpm		
ISO 9249/EEC 80/1269	48.5 kW	65 hp
Gross Power		
ISO 14396	49.7 kW	66.6 hp
Bore	94 mm	3.7 in
Stroke	120 mm	4.7 in
Displacement	3.33 L	203.2 in³

*Meets U.S. EPA Tier 4 Final and EU Stage IIIB emission standards.

Weights

Operating Weight with Cab	8400 kg	18,519 lb

- Weight with rubber tracks, bucket, operator (75 kg/165 lb), full fuel and auxiliary lines.
- Weight varies depending on machine configuration.

308E2 CR Mini Hydraulic Excavator with Swing Boom

Swing System

Machine Swing Speed	11 rpm
Boom Swing – Left	60°
Boom Swing – Right	50°

- Automatic swing break, spring applied, hydraulic release.

Travel System

Travel Speed		
High	5.1 km/h	3.17 mph
Low	2.8 km/h	1.74 mph
Maximum Traction Force		
High Speed	37.4 kN	8,408 lb
Low Speed	64.5 kN	14,500 lb
Gradeability (maximum)	30°	
Ground Pressure	36.3 kPa	5.26 psi

- Each track is driven by one independent 2-speed motor.
- Drive modules are integrated into the roller frame for total protection.
- Straight line travel when tracking and operating the front linkage simultaneously.

Service Refill Capacities

Fuel Tank	125 L	33 gal
Cooling System	14 L	3.7 gal
Engine Oil	11.2 L	3.0 gal
Hydraulic Tank	82 L	21.7 gal
Hydraulic System	94 L	24.8 gal

Hydraulic System

Pump Flow at 2,000 rpm	150 L/min	39.6 gal/min
Operating Pressure – Equipment	28 000 kPa	4,061 psi
Operating Pressure – Travel	28 000 kPa	4,061 psi
Operating Pressure – Swing	24 000 kPa	3,481 psi
Auxiliary Circuit – Primary (186 bar/2,734 psi)	128 L/min	33.8 gal/min
Auxiliary Circuit – Secondary (174 bar/2,524 psi)	64 L/min	16.9 gal/min
Digging Force – Stick (standard)	40.1 kN	9,015 lb
Digging Force – Stick (long)	35.1 kN	7,891 lb
Digging Force – Bucket	60.2 kN	13,534 lb

- Load sensing hydraulics with variable displacement piston pump.

Blade

Width	2320 mm	91.3 in
Height	450 mm	17.7 in
Dig Depth	360 mm	14.2 in
Lift Height	380 mm	15.0 in

Cab

Dynamic Operator Sound Pressure	70 dB(A) ISO 6396
Average Exterior Sound Pressure	99 dB(A) ISO 6395 – Dynamic Test

Operating Specifications

Stick Length – Standard	1670 mm	5 ft 6 in
Stick Length – Long	2210 mm	7 ft 3 in
Machine Overhang	279.4 mm	11 in
Machine Overhang with Counterweight	406 mm	16 in
Counterweight	251 kg	551 lb

308E2 CR Mini Hydraulic Excavator with Swing Boom

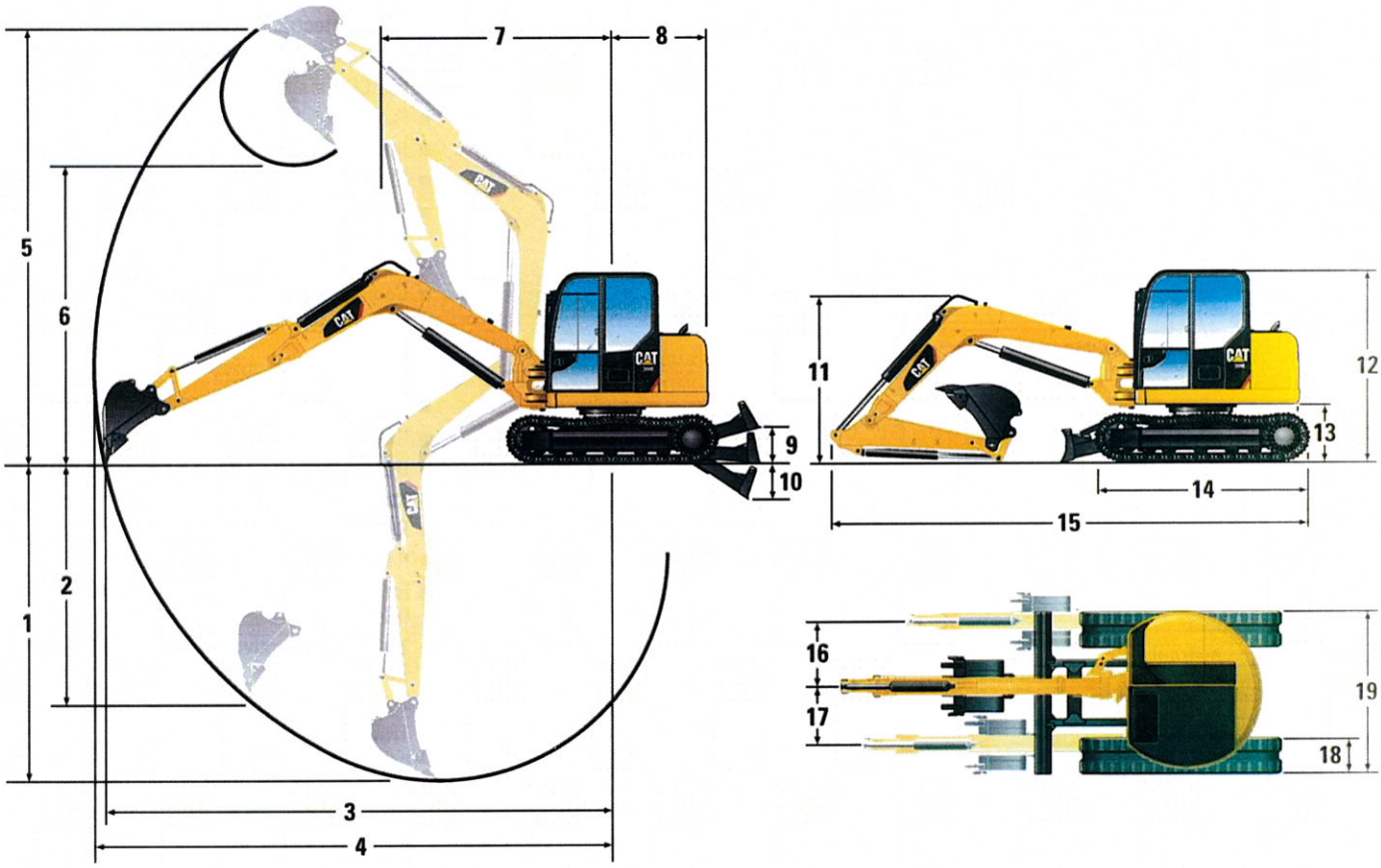

Dimensions

	Standard Stick		Long Stick	
1	4150 mm	13'7"	4690 mm	15'5"
2	2980 mm	9'9"	3550 mm	11'8"
3	6820 mm	22'9"	7350 mm	24'1"
4	7020 mm	23'0"	7540 mm	24'9"
5	6640 mm	21'9"	6990 mm	22'11"
6	4670 mm	15'4"	5010 mm	16'5"
7	2800 mm	9'2"	3280 mm	10'9"
8	1450 mm	4'9"	1450 mm	4'9"
9	420 mm	1'5"	420 mm	1'5"
10	320 mm	1'1"	320 mm	1'1"

	Standard Stick		Long Stick	
11	2280 mm	7'6"	2230 mm	7'4"
12	2550 mm	8'4"	2550 mm	8'4"
13	735 mm	2'5"	735 mm	2'5"
14	2903 mm	9'6"	2903 mm	9'6"
15	6380 mm	20'11"	6340 mm	20'10"
16	1010 mm	3'4"	1010 mm	3'4"
17	635 mm	2'1"	635 mm	2'1"
18	450 mm	1'6"	450 mm	1'6"
19	2320 mm	7'7"	2320 mm	7'7"

Lift Capacities at Ground Level*

Lift Point Radius		4000 mm (13'1")		6050 mm (19'10")	
		Front	Side	Front	Side
Blade Down	kg	3650	1710	1880	920
	lb	8,046	3,770	4,144	2,028
Blade Up	kg	1840	1530	970	820
	lb	4,056	3,373	2,138	1,808

* The above loads are consistent with hydraulic excavator lift capacity rating standard ISO 10567:2007 and they do not exceed 87% of hydraulic lifting capacity or 75% of tipping capacity. The excavator bucket weight is not included on this chart. Lifting capacities are for standard stick.

308E2 CR Mini Hydraulic Excavator with Swing Boom

STANDARD EQUIPMENT

ENGINE
- Cat C3.3B diesel engine (meets U.S. EPA Tier 4 Final/EU Stage IIIB emission standards)
- Automatic engine idle
- Automatic engine shut-off
- Automatic two speed travel
- Diesel Particulate Filter (North America only)
- Diesel Oxidation Catalyst (North America only)
- Fuel and water separator
- Power on demand

HYDRAULIC SYSTEM
- 1-way and 2-way (combined function)
- Accumulator
- Automatic swing parking brake
- Auxiliary hydraulic lines
- Adjustable auxiliary relief
- Auxiliary line quick disconnects
- Cat interlock system: hydraulic lockout
- Continuous auxiliary flow
- Ecology drain
- Hydraulic oil cooler
- High definition hydraulics
- Load sensing/flow sharing

OPERATOR ENVIRONMENT
- 100% pilot control ergonomic joysticks
- Adjustable armrests
- Air conditioning/heat
- COMPASS: complete, operation, maintenance, performance and security system
  - Multiple languages
- Cup holder
- High back suspension seat, heated
- Hydraulic neutral lockout bar
- Interior light
- Literature holder
- Pattern changer (optional in Europe)
- Radio (optional in Europe)
- Site reference system: leveling
- Tool storage area
- Travel control pedals with hand levers
- Washable floor mat
- Windshield wiper

UNDERCARRIAGE
- Dozer blade with float function
- Track, rubber belt, 450 mm (18 in) width
- Tie down eyes on track frame
- Towing eye on base frame

FRONT LINKAGE
- 180 degree bucket rotation
- Certified lifting eye on bucket linkage (optional in Europe)
- Front shovel capable
- Thumb ready stick

ELECTRICAL
- 12 volt electrical system
- 60 ampere alternator
- 650 CCA maintenance free battery
- Fuse box
- Ignition key start/stop switch
- Slow blow fuse
- Warning horn

LIGHTS AND MIRRORS
- Cab and boom light with time delay capability
- Mirror, rear view, cab left

SAFETY AND SECURITY
- Anti-theft system (COMPASS)
- Caterpillar Corporate "One Key" System
- Door locks
- Lockable fuel cap
- Rearview camera
- Retractable seat belt
- Roll Over Protective Structure (ROPS) (ISO 12117-2)
- Tip Over Protective Structure (TOPS) (ISO 12117)
- Top guard – ISO 10262 (Level II)
- Travel alarm (optional in Europe)

OPTIONAL EQUIPMENT

ENGINE
- Engine block heater

HYDRAULIC SYSTEM
- Quick coupler lines
- Boom lowering check valve*
- Stick lowering check valve*
- Secondary auxiliary hydraulic lines*

UNDERCARRIAGE
- Blade, weld on
- Track, triple grouser (steel), 450 mm (18 in)
- Track, triple grouser (steel) with rubber pad, 450 mm (18 in)
- Track, triple grouser (steel), 600 mm (24 in)

FRONT LINKAGE
- Quick coupler: manual or hydraulic
- Thumb
- Buckets
- Full range of performance matched work tools
  - Auger, hammer, shear, ripper

LIGHTS AND MIRRORS
- Mirror, cab rear

SAFETY AND SECURITY
- Battery disconnect
- Front wire mesh guard
- Front steel plate guard
- Rain guard

TECHNOLOGY
- Product Link™

OTHER ATTACHMENTS
- Counterweight, extra, 1121 kg (2,493 lb)*

*Standard on VAB configuration.

For more complete information on Cat products, dealer services, and industry solutions, visit us on the web at **www.cat.com**

AEHQ7043-01 (05-2016)
Replaces AEHQ7043

© 2016 Caterpillar
All rights reserved

Materials and specifications are subject to change without notice. Featured machines in photos may include additional equipment. See your Cat dealer for available options.

CAT, CATERPILLAR, SAFETY.CAT.COM, their respective logos, "Caterpillar Yellow" and the "Power Edge" trade dress, as well as corporate and product identity used herein, are trademarks of Caterpillar and may not be used without permission.

Cat®
272D2

Skid Steer Loader

Features:

The Cat® 272D2 Skid Steer Loader, with its long wheel base and vertical lift design, delivers extended reach and lift height for quick and easy truck loading. Its stability and lifting performance provides excellent material handling. The 272D2 features the following:

- **Industry leading sealed and pressurized cab option** provides a cleaner and quieter operating environment with excellent work tool visibility.
- **Available high-back, heated, air ride seat with seat mounted adjustable joystick controls** makes Cat Skid Steer Loaders the industry leader in operator comfort.
- **High performance power train** provides maximum performance and production capability through the Electronic Torque Management system, optional two speed travel and an electronic hand/foot throttle with decel pedal capability.
- **High Flow XPS hydraulic system** is available for applications that demand maximum hydraulic work tool performance.
- **Electronically controlled Cat C3.8 engine** provides high horsepower and torque while meeting U.S. EPA Tier 4 Final/EU Stage IV emission standards.
- **Cat "Intelligent Leveling" system (ILEV)** provides industry leading technology, integration and optional features such as dual direction self level, work tool return to dig and work tool positioner.
- **Speed Sensitive Ride Control option** improves operation on rough terrain, enabling better load retention, increased productivity and greater operator comfort.
- **Maximize machine capability and control** with the standard Advanced Display providing on-screen adjustments for implement response, hystat response and creep control. Also features multi-language functionality with customizable layouts, security system and rearview camera.
- **Ground level access** to all daily service and routine maintenance points helps reduce machine downtime for greater productivity.
- **Broad range of performance matched Cat Work Tools** make the Cat Skid Steer Loader the most versatile machine on the job site.

Specifications

Engine

Engine Model	Cat C3.8 DIT (turbo)	
Gross Power SAE J1995	73 kW	98 hp
Net Power SAE 1349	71 kW	95 hp
Net Power ISO 9249	71 kW	96 hp
Peak Torque at 1,500 rpm SAE J1995	334 N·m	246 lbf-ft
Displacement	3.8 L	232 in³
Stroke	120 mm	4.7 in
Bore	100 mm	3.9 in

Weights*

Operating Weight	3977 kg	8,768 lb

Power Train

Travel Speed (Forward or Reverse):		
One Speed	10.6 km/h	6.6 mph
Two Speed Option	15.1 km/h	9.4 mph

Operating Specifications*

Rated Operating Capacity	1542 kg	3,400 lb
Rated Operating Capacity with Optional Counterweight	1656 kg	3,650 lb
Tipping Load	3084 kg	6,800 lb
Breakout Force, Tilt Cylinder	3376 kg	7,443 lb
Breakout Force, Lift Cylinder	2755 kg	6,074 lb

Hydraulic System

Hydraulic Flow – Standard:		
Loader Hydraulic Pressure	23 000 kPa	3,335 psi
Loader Hydraulic Flow	86 L/min	23 gal/min
Hydraulic Power (calculated)	33 kW	44 hp
Hydraulic Flow – High Flow XPS:		
Maximum Loader Hydraulic Pressure	28 000 kPa	4,061 psi
Maximum Loader Hydraulic Flow	121 L/min	32 gal/min
Hydraulic Power (calculated)	57 kW	76 hp

Cab

ROPS	ISO 3471:2008
FOPS	ISO 3449:2005 Level I
FOPS Level II	ISO 3449:2005 Level II

Service Refill Capacities

Chain Box, each side	10.2 L	2.7 gal
Cooling System	16 L	4.1 gal
Diesel Exhaust Fluid (DEF) Tank	19 L	5 gal
Engine Crankcase	13 L	3.5 gal
Fuel Tank	122 L	32.2 gal
Hydraulic System	55 L	14.5 gal
Hydraulic Tank	39 L	10.3 gal

272D2 Skid Steer Loader

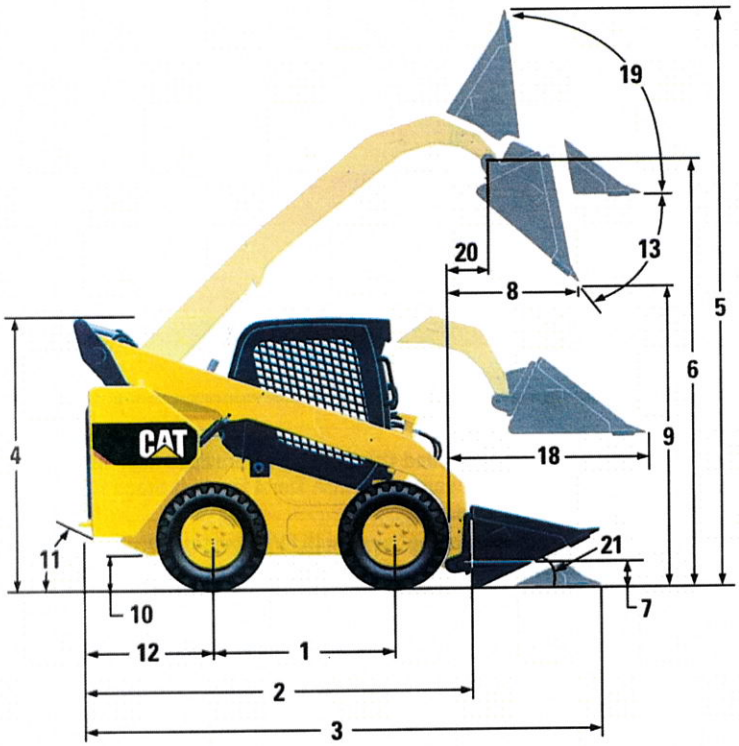

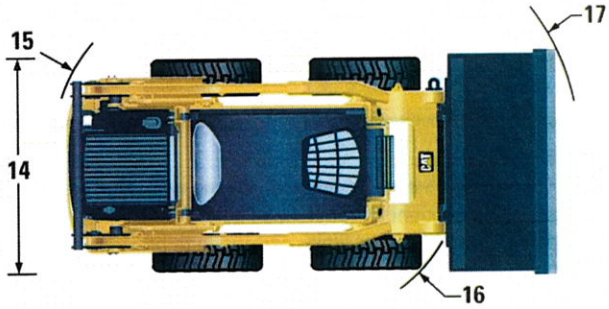

Dimensions*

1	Wheelbase	1386 mm	54.6 in
2	Length without Bucket	3242 mm	127.6 in
3	Length with Bucket on Ground	3954 mm	155.7 in
4	Height to Top of Cab	2094 mm	82.4 in
5	Maximum Overall Height	4067 mm	160.1 in
6	Bucket Pin Height at Maximum Lift	3229 mm	127.1 in
7	Bucket Pin Height at Carry Position	198 mm	7.8 in
8	Reach at Maximum Lift and Dump	769 mm	30.3 in
9	Clearance at Maximum Lift and Dump	2438 mm	96.0 in
10	Ground Clearance	226 mm	8.9 in
11	Departure Angle	27°	
12	Bumper Overhang behind Rear Axle	1175 mm	46.2 in
13	Maximum Dump Angle	51°	
14	Vehicle Width over Tires	1829 mm	72.0 in
15	Turning Radius from Center – Machine Rear	1899 mm	74.7 in
16	Turning Radius from Center – Coupler	1482 mm	58.3 in
17	Turning Radius from Center – Bucket (racked)	2280 mm	89.8 in
18	Maximum Reach with Arms Parallel to Ground	1282 mm	50.5 in
19	Rack Back Angle at Maximum Height	84°	
20	Bucket Pin Reach at Maximum Lift	374 mm	14.7 in
21	Roll Back Angle	28°	

*Operating Weight, Operating Specifications and Dimensions all based on 75 kg (165 lb) operator, all fluids, one speed, enclosed cab with glass door, side windows, heater, mechanical suspension seat, advanced display, standard flow hydraulics, 880 CCA battery, 1829 mm (72 in) dirt bucket, no optional counterweights, Cat PC 12 × 16.5 tires and manual quick coupler (unless otherwise noted).

MANDATORY EQUIPMENT

- Hydraulics, Standard or High Flow XPS
- Quick Coupler, Mechanical or Electric
- Seat Belt, 50 mm (2 in) or 75 mm (3 in)
- Power Train: One Speed, Two Speed or Two Speed with Speed Sensitive Ride Control
- Tires, 12 × 16.5 or 14 × 17.5

PERFORMANCE PACKAGE ***(must select one of the following)***

- Performance Package H1: *Standard Flow Hydraulics (No Self Level)*
- Performance Package H2: *Standard Flow, Dual Direction Electronic Self Level (Raise and Lower), Electronic Snubbing (Raise and Lower)*
- Performance Package H3: *High Flow XPS, Dual Direction Electronic Self Level (Raise and Lower), Electronic Snubbing (Raise and Lower)*

COMFORT PACKAGE ***(must select one of the following)***

- Open ROPS (C0): *Static Seat (No Foot Throttle, Headliner, Heater or Door)*
- Open ROPS (C1): *Foot Throttle, Headliner, Cup Holder, and choice of Seat (Mechanical Suspension or High Back, Heated, Air Ride Seat) (No Heater or Door)*
- Enclosed ROPS with Heater (C2): *Foot Throttle, Headliner, Heater and Defroster, Side Windows, Cup Holder, Radio Ready, choice of Seat (Mechanical Suspension or High Back, Heated, Air Ride Seat) and Door (Glass or Polycarbonate)*
- Enclosed ROPS with A/C (C3): *C2 + Air Conditioner*

STANDARD EQUIPMENT

ELECTRICAL

- 12 volt Electrical System
- 100 ampere Alternator
- Ignition Key Start/Stop Switch
- Lights: *Gauge Backlighting, Two Rear Tail Lights, Two Rear Halogen Working Lights, Two Adjustable Front Halogen Lights, Dome Light*
- Backup Alarm
- Heavy Duty Battery, 880 CCA

OPERATOR ENVIRONMENT

- Gauges: *Fuel Level, DEF Level, Hour Meter*
- Operator Warning System Indicators: *Air Filter Restriction, Alternator Output, Armrest Raised/Operator Out of Seat, Engine Coolant Temperature, Engine Oil Pressure, Air Inlet Heater Activation, Hydraulic Filter Restriction, Hydraulic Oil Temperature, Park Brake Engaged, Engine Emission System*
- Adjustable Vinyl Seat
- Fold In Ergonomic Contoured Armrest
- Control Interlock System, when operator leaves seat or armrest raised: *Hydraulic System Disables, Hydrostatic Transmission Disables, Parking Brake Engages*
- ROPS Cab, Open, Tilt Up
- FOPS, Level I
- Top and Rear Windows
- Floor Mat
- Interior Rearview Mirror
- 12 volt Electric Socket
- Horn
- Hand (Dial) and Foot Throttle, Electronic with Decel Feature
- Adjustable Joystick Controls
- Advanced Display: *Full Color, 127 mm (5 in) LCD Screen, Advanced Multi-operator Security System, On-screen Adjustments for Implement Response, Hystat Drive Response and Creep Control*
- Storage Compartment with Netting

POWER TRAIN

- Cat C3.8, Turbo Diesel Engine, Meeting Tier 4 Final/Stage IV Emission Standards
- Air Cleaner, Dual Element, Radial Seal
- S·O·S℠ Sampling Valve, Hydraulic Oil
- Filters, Cartridge-type, Hydraulic
- Filters, Cartridge-type, Fuel and Water Separator
- Radiator/Hydraulic Oil Cooler (side-by-side)
- Spring Applied, Hydraulically Released Parking Brakes
- Hydrostatic Transmission
- Four Wheel Chain Drive

OTHER

- Engine Enclosure, Lockable
- Extended Life Antifreeze, –37° C (–34° F)
- Machine Tie Down Points (6)
- Support, Lift Arm
- Hydraulic Oil Level Sight Gauge
- Radiator Coolant Level Sight Gauge
- Radiator, Expansion Bottle
- Cat ToughGuard™ Hose
- Auxiliary, Hydraulics, Continuous Flow
- Heavy Duty, Flat Faced Quick Disconnects with Integrated Pressure Release
- Split D-Ring to Route Work Tool Hoses Along Side of Left Lift Arm
- Electrical Outlet, Beacon
- Belly Pan Cleanout
- Variable Speed Demand Fan

OPTIONAL ATTACHMENTS

- External Counterweights
- Beacon, Rotating
- Engine Block Heater – 120V
- Oil, Hydraulic, Cold Operation
- Paint, Custom
- Heavy Duty Battery, 880 CCA, with Battery Disconnect
- Heavy Duty Battery, 1,000 CCA, with Battery Disconnect
- Product Link™, Cellular
- Variable Speed Demand Fan with Reversing Functionality
- Advanced Display: Rearview Camera Included
- Work Tool Return to Dig and Work Tool Positioner
- Bluetooth Radio with Microphone (AM/FM/Weather Band Receiver with USB and Auxiliary Input Jack)

For more complete information on Cat products, dealer services, and industry solutions, visit us on the web at www.cat.com

© 2015 Caterpillar
All Rights Reserved

Materials and specifications are subject to change without notice. Featured machines in photos may include additional equipment. See your Cat dealer for available options.

CAT, CATERPILLAR, SAFETY.CAT.COM, their respective logos, "Caterpillar Yellow" and the "Power Edge" trade dress, as well as corporate and product identity used herein, are trademarks of Caterpillar and may not be used without permission.

AEHQ7438 (03-15)
(NACD, EU, ANZ)