CONTRACT DOCUMENTS

For

CITY OF BETHEL
INSTITUTIONAL CORRIDOR
PIPED WATER SYSTEM

OWNER: City of Bethel
P.O. Box 1388
Bethel, Alaska 99559

ENGINEER: DOWL, LLC
4041 B Street
Anchorage, Alaska 99503

October, 2016

DIVISION 00: CONTRACT INFORMATION

00 11 13	Advertisement for Bids (EJCDC C-113)
00 21 13	Instruction to Bidders (EJCDC C-200)
00 41 13	Bid Form (EJCDC C-410)
00 43 13	Bid Bond (EJCDC C-430)
00 52 13	Suggested Form of Agreement (EJCDC C-520)
00 61 13.13	Performance Bond (EJCDC C-610)
00 61 13.16	Payment Bond (EJCDC C-615)
00 72 13	Standard General Conditions of the Construction Contract (EJCDC C-700)
00 80 00	Supplementary Conditions (EJCDC C-800)

DIVISION 01: GENERAL REQUIREMENTS

01 00 00	General Requirements
01 00 01	Method of Measurement and Basis of Payment
01 33 00	Submittals Procedures

DIVISION 02: EXISTING CONDITIONS

02 41 00	Site Demolition

DIVISION 26: ELECTRICAL

26 05 00	Common Work Results for Electrical
26 05 01	Basic Materials & Methods
26 05 19	Low-Voltage Electrical Power Conductors and Cables
26 05 26	Grounding and Bonding for Electrical Systems
26 05 29	Hangers and Supports for Electrical Systems
26 05 33	Raceway and Boxes for Electrical Systems
26 05 34	Outlet Boxes
26 05 35	Pull and Junction Boxes
26 24 19	Low Voltage Motor Control Centers
26 28 16	Enclosed Switches and Circuit Breakers
26 29 13.13	Across-the-Line Motor Controllers
26 29 13.16	Reduced-Voltage Motor Controllers

DIVISION 40: INSTRUMENTATION

40 90 00	Process Control and Instrumentation Systems
40 95 00	PAC-Based Control Systems Hardware
40 95 13	Control Panels
40 95 15	SCADA Software and Programming

DIVISION 31: EARTH WORK

31 20 00	Earth Moving
31 25 00	Erosion and Sediment Controls
31 62 16	Helical Anchors

DIVISION 33: WATER UTILITIES

33 07 00	Insulated Pipe and Fittings
33 07 01	Public Water Utility Distribution Piping
33 07 03	Guided Pilot Tube Auger Jack and Bore 24” Casing Installation
33 10 01	Steel Piping Fittings Valves
33 10 02	Pumps and Motors
33 10 03	Instruments and Specialty Piping Items
33 10 04	Special Coatings
33 10 05	HDPE Pipe and Fittings
33 12 13	Water Service Connections
33 13 00	Disinfection of Water Utility Distribution Piping

ATTACHMENTS

A. Sample Award Letters, Payment Requests, and other Contract Documents
B. List of Owner Procured Materials
C. Background information
D. Construction Drawings

SECTION 00 11 13
ADVERTISEMENT FOR BIDS

CITY OF BETHEL
BETHEL, ALASKA
INSTITUTIONAL CORRIDOR PIPED WATER SYSTEM

ADVERTISEMENT FOR BIDS

Separate sealed Bids for the construction of the City of Bethel, Institutional Corridor Piped Water System, DCCED Grant #14-DC-042 project will be received, on behalf of the City of Bethel, by Jovie Garcia at DOWL office at 4041 B Street, Anchorage, Alaska 99503 until **3:00 PM (AKDST), Thursday, November 10th, 2016,** and then at the said office publicly open and read aloud.

This project is funded by a grant from the State of Alaska, Department of Commerce, Community, and Economic Development (DCCED). This project scope consists of constructing approximately 6,900 feet of above-ground insulated water main from the City Subdivision water treatment plant on Akiak Street to the Chief Eddie Hoffman Highway where it runs parallel to the highway until the adult Corrections Facility where it crosses the highway and runs past institutions until it connects with the existing City Subdivision Distribution "Loop A". Improvements to the water treatment plant and approximately 2,100 feet of service lines are included in this project.

A portion of the construction materials for this project have been procured by the City and will be made available to the Contractor for installation. City procured materials include:

- 8,700 linear feet of 8" x20" Arctic Insulated Pipe Water Main including the necessary joint appurtenances
- (12) 8"x20" Insulated Arctic Pipe long sweep 90 degree bends
- 100 Helical Anchors
- 3,000 linear feet of insulated dual 3" conduit Arctic service pipe.

Bids will be received for a single prime Contract. Bids shall be developed on a unit price basis as indicated in the Bid Form and Unit Price Form

The Issuing Office for the Bidding Documents is:

City of Bethel
ATTN: Jovie Garcia - DOWL
4041 B Street
Anchorage, Alaska 99503
Phone: 907-562-2000
Email: jgarcia@dowl.com

Prospective Bidders may obtain copies of the Bidding Documents from the Issuing Office as described below.

Bidding Documents also may be examined at **The Plans Room LLC (Anchorage, Alaska) and AGC/The Plans Room (Fairbanks, Alaska)**; and the office of the Engineer, **DOWL 4041 B Street, Anchorage, Alaska 99503**, on Mondays through Fridays between the hours of **8:00 AM and 5:00 PM**.

A mandatory pre-bid construction walk-through meeting will be conducted in Bethel on **October 26, 2016 at 2:00 PM (AKDST)**. Contractor presence is mandatory, alternative walk-through times could be coordinated with the City of Bethel in certain situations.

Each bid must be submitted and sealed in an envelope addressed to City of Bethel ATTN: Jovie Garcia, P.E.- DOWL, 4041 B Street, Anchorage, Alaska 99503 and plainly marked on the outside of the envelope as "Bid for City of Bethel, Institutional Corridor Piped Water System, DCCED Grant #14-DC-042" and the date and hour of the bid opening.

The prevailing wage rates of the State of Alaska Department of Labor and Safety for Laborers' & Mechanics Minimum Rates of Pay (Pamphlet 600) apply to this project and are hereby incorporated by reference as if fully set forth herein.

The successful Bid shall comply with each and every provision thereof. Each Bid will be reviewed by the Owner and Engineer for compliance and completeness. Bidders must be in good standing with the City of Bethel. The winning bid will be selected based on the lowest, responsive, qualified bid. Local Bids will receive a five percent (5%) preference in determining the lowest responsible and responsive bid.

The City of Bethel will not be liable for any costs incurred by any Bidder in response to this advertisement. Further the City of Bethel reserves the right to reject any or all bids without cause.

All questions should be submitted in writing to Jovie Garcia at jgarcia@dowl.com.

END OF ADVERTISEMENT FOR BIDS

SECTION 00 21 13

INSTRUCTIONS TO BIDDERS

TABLE OF ARTICLES

Page

ARTICLE 2 – Copies of Bidding Documents 2

ARTICLE 3 – Qualifications of Bidders 2

ARTICLE 4 – Site and Other Areas; Existing Site Conditions; Examination of Site; Owner's Safety Program; Other Work at the Site 3

ARTICLE 5 – Bidder's Representations 5

ARTICLE 6 – Pre-Bid Conference 6

ARTICLE 7 – Interpretations and Addenda 6

ARTICLE 8 – Bid Security 6

ARTICLE 9 – Contract Times 7

ARTICLE 10 – Liquidated Damages 7

ARTICLE 11 – Substitute and "Or-Equal" Items 7

ARTICLE 12 – Subcontractors, Suppliers, and Others 7

ARTICLE 13 – Preparation of Bid 8

ARTICLE 14 – Basis of Bid 9

ARTICLE 15 – Submittal of Bid 9

ARTICLE 16 – Modification and Withdrawal of Bid 9

ARTICLE 17 – Opening of Bids 10

ARTICLE 18 – Bids to Remain Subject to Acceptance 10

ARTICLE 19 – Evaluation of Bids and Award of Contract 10

ARTICLE 20 – Bonds and Insurance 11

ARTICLE 21 – Signing of Agreement 11

ARTICLE 22 – Sales and Use Taxes 11

ARTICLE 23 – Contracts to be Assigned 11

ARTICLE 24 – Wage Rate Requirements 11

ARTICLE 25 – BID PROTESTS 11

ARTICLE 1 – DEFINED TERMS

1.01 Terms used in these Instructions to Bidders have the meanings indicated in the General Conditions and Supplementary Conditions. Additional terms used in these Instructions to Bidders have the meanings indicated below:

A. *Issuing Office* – The office from which the Bidding Documents are to be issued and where the bidding procedures are to be administered.

1. **City of Bethel**
ATTN: Jovie Garcia, DOWL
4041 B Street
Anchorage, Alaska 99503
907-562-2000
jgarcia@dowl.com

B. ***Local Bidder* – A local bidder means a business that submits a bid with fixed offices or distribution points located within the boundaries of the City of Bethel and who has a current City of Bethel business license and who is at the time bidding in compliance with all requirements of the City of Bethel sales tax ordinance. A Bethel post office box number or residential address may not be used solely to establish status as a local bidder. The Owner reserves the final right on determination of local bidder status.**

ARTICLE 2 – COPIES OF BIDDING DOCUMENTS

2.01 Complete sets of the Bidding Documents may be obtained from the Issuing Office in the number and format stated in the advertisement or invitation to bid.

2.02 Complete sets of Bidding Documents shall be used in preparing Bids; neither Owner nor Engineer assumes any responsibility for errors or misinterpretations resulting from the use of incomplete sets of Bidding Documents.

2.03 Owner and Engineer, in making copies of Bidding Documents available on the above terms, do so only for the purpose of obtaining Bids for the Work and do not authorize or confer a license or grant for any other use.

ARTICLE 3 – QUALIFICATIONS OF BIDDERS

3.01 To demonstrate Bidder's qualifications to perform the Work, Bidder shall submit with its Bid (a) written evidence establishing its qualifications such as financial data, and present commitments, and (b) the following additional information:

A. Evidence and references of past experience installing arctic insulated water main and services of similar size, length, and complexity on at least 3 projects. These references may be asked for and approved before the Contract is awarded.

B. Evidence of Bidder's authority to do business in the state or jurisdiction of where the Project is located,

C. Alaska Contractor's License No.,

D. List of proposed Subcontractor(s),

E. List of proposed Supplier(s),

F. Required Bid security in the form of a Bid Bond (EJCDC No. C-430, 2013),

G. Listing of similar projects over the past five years, including location, size, owner contact name, and telephone, and

H. If Bidder is a Local Bidder, a signed letter stating status as a Local Bidder must be provided and the Bidder must show compliance with the definition of a local bidder as found in Article 1 of this section.

3.02 Bidders must be in good standing with the Owner. Good standing includes but not limited to:

1. No outstanding debts, fees, payments, or taxes owed to the Owner.
2. No outstanding claims between the Owner and Bidder, and
3. No previous history of default of duty, contract, or obligation to the Owner.

3.03 A Bidder's failure to submit required qualification information within the times indicated may disqualify Bidder from receiving an award of the Contract.

3.04 No requirement in this Article 3 to submit information will prejudice the right of Owner to seek additional pertinent information regarding Bidder's qualifications.

3.05 Bidder is advised to carefully review those portions of the Bid Form requiring Bidder's representations and certifications.

ARTICLE 4 – SITE AND OTHER AREAS; EXISTING SITE CONDITIONS; EXAMINATION OF SITE; OWNER'S SAFETY PROGRAM; OTHER WORK AT THE SITE

4.01 *Site and Other Areas*

A. The Site is identified in the Bidding Documents. By definition, the Site includes rights-of-way, easements, and other lands furnished by Owner for the use of the Contractor. Any additional lands required for temporary construction facilities, construction equipment, or storage of materials and equipment, and any access needed for such additional lands, are to be obtained and paid for by Contractor.

1. Owner will obtaine rights-of-way for the project and agreements shall be made available to Bidders when available.

4.02 *Existing Site Conditions*

A. Subsurface, Physical, and Hazardous Environmental Conditions

1. The Supplementary Conditions identify:

a. Those reports known to Owner of explorations and tests of subsurface conditions at or adjacent to the Site. The *2015 Subsurface Exploration and Foundation Recommendation* for this project are provided in Attachment C.

b. Reports and drawings known to Owner relating to Hazardous Environmental Conditions that have been identified at or adjacent to the Site. The *2015 Contaminated Sites Review* for this project is provided in Attachment C.

2. Owner will make copies of reports and drawings referenced above available to any Bidder on request. These reports and drawings are not part of the Contract Documents, but the Technical Data contained therein upon whose accuracy Bidder is entitled to rely, as provided in the General Conditions, has been identified and

established in the Supplementary Conditions. Bidder is responsible for any interpretation or conclusion Bidder draws from any Technical Data or any other data, interpretations, opinions, or information contained in such reports or shown or indicated in such drawings.

3. If the Supplementary Conditions do not identify Technical Data, the default definition of Technical Data set forth in Article 1 of the General Conditions will apply.

B. Underground Facilities: Information and data shown or indicated in the Bidding Documents with respect to existing Underground Facilities at or contiguous to the Site are set forth in the Contract Documents and are based upon information and data furnished to Owner and Engineer by owners of such Underground Facilities, including Owner, or others.

C. Adequacy of Data: Provisions concerning responsibilities for the adequacy of data furnished to prospective Bidders with respect to subsurface conditions, other physical conditions, and Underground Facilities, and possible changes in the Bidding Documents due to differing or unanticipated subsurface or physical conditions appear in Paragraphs 5.03, 5.04, and 5.05 of the General Conditions. Provisions concerning responsibilities for the adequacy of data furnished to prospective Bidders with respect to a Hazardous Environmental Condition at the Site, if any, and possible changes in the Contract Documents due to any Hazardous Environmental Condition uncovered or revealed at the Site which was not shown or indicated in the Drawings or Specifications or identified in the Contract Documents to be within the scope of the Work, appear in Paragraph 5.06 of the General Conditions.

4.03 *Site Visit and Testing by Bidders*

A. Bidder shall conduct the required Site visit during normal working hours, and shall not disturb any ongoing operations at the Site.

B. Bidder is not required to conduct any subsurface testing, or exhaustive investigations of Site conditions.

C. On request, and to the extent Owner has control over the Site, and schedule permitting, the Owner will provide Bidder access to the Site to conduct such additional examinations, investigations, explorations, tests, and studies as Bidder deems necessary for preparing and submitting a successful Bid. Owner will not have any obligation to grant such access if doing so is not practical because of existing operations, security or safety concerns, or restraints on Owner's authority regarding the Site.

D. Bidder shall comply with all applicable Laws and Regulations regarding excavation and location of utilities, obtain all permits, and comply with all terms and conditions established by Owner or by property owners or other entities controlling the Site with respect to schedule, access, existing operations, security, liability insurance, and applicable safety programs.

E. Bidder shall fill all holes and clean up and restore the Site to its former condition upon completion of such explorations, investigations, tests, and studies.

4.04 *Owner's Safety Program*

A. Site visits and work at the Site may be governed by an Owner safety program. As the General Conditions indicate, if an Owner safety program exists, it will be noted in the Supplementary Conditions.

4.05 *Other Work at the Site*

A. Reference is made to Article 8 of the Supplementary Conditions for the identification of the general nature of other work of which Owner is aware (if any) that is to be performed at the Site by Owner or others (such as utilities and other prime contractors) and relates to the Work contemplated by these Bidding Documents. If Owner is party to a written contract for such other work, then on request, Owner will provide to each Bidder access to examine such contracts (other than portions thereof related to price and other confidential matters), if any.

ARTICLE 5 – BIDDER'S REPRESENTATIONS

5.01 It is the responsibility of each Bidder before submitting a Bid to:

A. examine and carefully study the Bidding Documents, and any data and reference items identified in the Bidding Documents;

B. visit the Site, conduct a thorough, alert visual examination of the Site and adjacent areas, and become familiar with and satisfy itself as to the general, local, and Site conditions that may affect cost, progress, and performance of the Work;

C. become familiar with and satisfy itself as to all Laws and Regulations that may affect cost, progress, and performance of the Work;

D. carefully study all: (1) reports of explorations and tests of subsurface conditions at or adjacent to the Site and all drawings of physical conditions relating to existing surface or subsurface structures at the Site that have been identified in the Supplementary Conditions, especially with respect to Technical Data in such reports and drawings, and (2) reports and drawings relating to Hazardous Environmental Conditions, if any, at or adjacent to the Site that have been identified in the Supplementary Conditions, especially with respect to Technical Data in such reports and drawings;

E. consider the information known to Bidder itself; information commonly known to contractors doing business in the locality of the Site; information and observations obtained from visits to the Site; the Bidding Documents; and the Site-related reports and drawings identified in the Bidding Documents, with respect to the effect of such information, observations, and documents on (1) the cost, progress, and performance of the Work; (2) the means, methods, techniques, sequences, and procedures of construction to be employed by Bidder; and (3) Bidder's safety precautions and programs;

F. agree, based on the information and observations referred to in the preceding paragraph, that at the time of submitting its Bid no further examinations, investigations, explorations, tests, studies, or data are necessary for the determination of its Bid for performance of the Work at the price bid and within the times required, and in accordance with the other terms and conditions of the Bidding Documents;

G. become aware of the general nature of the work to be performed by Owner and others at the Site that relates to the Work as indicated in the Bidding Documents;

H. promptly give Engineer written notice of all conflicts, errors, ambiguities, or discrepancies that Bidder discovers in the Bidding Documents and confirm that the written resolution thereof by Engineer is acceptable to Bidder;

I. determine that the Bidding Documents are generally sufficient to indicate and convey understanding of all terms and conditions for the performance and furnishing of the Work; and

J. agree that the submission of a Bid will constitute an incontrovertible representation by Bidder that Bidder has complied with every requirement of this Article, that without exception the Bid and all prices in the Bid are premised upon performing and furnishing the Work required by the Bidding Documents.

ARTICLE 6 – PRE-BID MEETING

6.01 A pre-Bid meeting will be held at the time and location stated in the invitation or advertisement to bid. Representatives of Owner and Engineer will be present to discuss the Project. Bidders are required to attend and participate in the conference. Owner will transmit to all prospective Bidders of record such Addenda as Owner considers necessary in response to questions arising at the conference. Oral statements may not be relied upon and will not be binding or legally effective.

ARTICLE 7 – INTERPRETATIONS AND ADDENDA

7.01 All questions about the meaning or intent of the Bidding Documents are to be submitted to Owner in writing. Interpretations or clarifications considered necessary by Owner in response to such questions will be issued by Addenda delivered to all parties recorded as having received the Bidding Documents. Questions received less than seven days prior to the date for opening of Bids may not be answered. Only questions answered by Addenda will be binding. Oral and other interpretations or clarifications will be without legal effect.

7.02 Addenda may be issued to clarify, correct, supplement, or change the Bidding Documents.

ARTICLE 8 – BID SECURITY

8.01 A Bid must be accompanied by Bid security made payable to Owner in an amount of ten percent (10%) of Bidder's maximum Bid price (determined by adding the base bid and all alternates) and in the form of a certified check, bank money order, or a Bid bond (on the form included in the Bidding Documents) issued by a surety meeting the requirements of Paragraphs 6.01 and 6.02 of the General Conditions.

8.02 The Bid security of the apparent Successful Bidder will be retained until Owner awards the contract to such Bidder, and such Bidder has executed the Contract Documents, furnished the required contract security, and met the other conditions of the Notice of Award, whereupon the Bid security will be released. If the Successful Bidder fails to execute and deliver the Contract Documents and furnish the required contract security within 15 days after the Notice of Award, Owner may consider Bidder to be in default, annul the Notice of Award, and the Bid security of that Bidder will be forfeited. Such forfeiture shall be Owner's exclusive remedy if Bidder defaults.

8.03 The Bid security of other Bidders that Owner believes to have a reasonable chance of receiving the award may be retained by Owner until the earlier of seven days after the Effective Date of the Contract or 61 days after the Bid opening, whereupon Bid security furnished by such Bidders will be released.

8.04 Bid security of other Bidders that Owner believes do not have a reasonable chance of receiving the award will be released within seven days after the Bid opening.

ARTICLE 9 – CONTRACT TIMES

9.01 The number of days within which, or the dates by which, the Work is to be substantially completed and ready for final payment are set forth in the Agreement.

ARTICLE 10 – LIQUIDATED DAMAGES

10.01 Provisions for liquidated damages, if any, for failure to timely attain Substantial Completion or completion of the Work in readiness for final payment, are set forth in the Agreement.

ARTICLE 11 – SUBSTITUTE AND "OR-EQUAL" ITEMS

11.01 The Contract for the Work, if awarded, will be on the basis of materials and equipment specified or described in the Bidding Documents, and those "or-equal" or substitute materials and equipment subsequently approved by Engineer prior to the submittal of Bids and identified by Addendum. No item of material or equipment will be considered by Engineer as an "or-equal" or substitute unless written request for approval has been submitted by Bidder and has been received by Engineer at least 15 days prior to the date for receipt of Bids in case of a proposed substitute and 5 days prior in the case of a proposed "or equal". Each such request shall comply with the requirements of Paragraphs 7.04 and 7.05 of the General Conditions. The burden of proof of the merit of the proposed item is upon Bidder. Engineer's decision of approval or disapproval of a proposed item will be final. If Engineer approves any such proposed item, such approval will be set forth in an Addendum issued to all prospective Bidders. Bidders shall not rely upon approvals made in any other manner. Substitutes and "or-equal" materials and equipment may be proposed by Contractor in accordance with Paragraph 7.04 and 7.05 of the General Conditions after the Effective Date of the Contract.

11.02 All prices that Bidder sets forth in its Bid shall be based on the presumption that the Contractor will furnish the materials and equipment specified or described in the Bidding Documents, as supplemented by Addenda. Any assumptions regarding the possibility of post-Bid approvals of "or-equal" or substitution requests are made at Bidder's sole risk.

ARTICLE 12 – SUBCONTRACTORS, SUPPLIERS, AND OTHERS

12.01 The Bid Documents, the apparent Successful Bidder, and any other Bidder so requested, shall within five days after Bid opening, submit to Owner a list of the Subcontractors or Suppliers proposed for the following portions of the Work: piping, electrical, instrumentation, mechanical and trenchless technology.

If requested by Owner, such list shall be accompanied by an experience statement with pertinent information regarding similar projects and other evidence of qualification for each such Subcontractor, Supplier, or other individual or entity. If Owner or Engineer, after due investigation, has reasonable objection to any proposed Subcontractor, Supplier, individual, or entity, Owner may, before the Notice of Award is given, request apparent Successful Bidder to submit an acceptable substitute, in which case apparent Successful Bidder shall submit a substitute, Bidder's Bid price will be increased (or decreased) by the difference in cost occasioned by such substitution, and Owner may consider such price adjustment in evaluating Bids and making the Contract award.

12.02 If apparent Successful Bidder declines to make any such substitution, Owner may award the Contract to the next lowest Bidder that proposes to use acceptable Subcontractors, Suppliers, or other individuals or entities. Declining to make requested substitutions will constitute grounds

for forfeiture of the Bid security of any Bidder. Any Subcontractor, Supplier, individual, or entity so listed and against which Owner or Engineer makes no written objection prior to the giving of the Notice of Award will be deemed acceptable to Owner and Engineer subject to subsequent revocation of such acceptance as provided in Paragraph 7.06 of the General Conditions.

12.03 Contractor shall not be required to employ any Subcontractor, Supplier, individual, or entity against whom Contractor has reasonable objection.

12.04 The Contractor shall not award work to Subcontractor(s) in excess of the limits stated in SC 7.06.

ARTICLE 13 – PREPARATION OF BID

13.01 The Bid Form is included with the Bidding Documents.

A. All blanks on the Bid Form shall be completed in ink and the Bid Form signed in ink. Erasures or alterations shall be initialed in ink by the person signing the Bid Form. A Bid price shall be indicated for each section, Bid item, alternate, adjustment unit price item, and unit price item listed therein.

B. If the Bid Form expressly indicates that submitting pricing on a specific alternate item is optional, and Bidder elects to not furnish pricing for such optional alternate item, then Bidder may enter the words “No Bid” or “Not Applicable.”

13.02 A Bid by a corporation shall be executed in the corporate name by a corporate officer (whose title must appear under the signature), accompanied by evidence of authority to sign. The corporate address and state of incorporation shall be shown.

13.03 A bid by a partnership shall be executed in the partnership name and signed by a partner (whose title must appear under the signature), accompanied by evidence of authority to sign. The official address of the partnership shall be provided on the Bid Form.

13.04 A Bid by a limited liability company shall be executed in the name of the firm by a member or other authorized person and accompanied by evidence of authority to sign. The state of formation of the firm and the official address of the firm shall be shown.

13.05 A Bid by an individual shall show the Bidder’s name and official address.

13.06 A Bid by a joint venture shall be executed by an authorized representative of each joint venturer in the manner indicated on the Bid Form. The official address of the joint venture shall be shown.

13.07 All names shall be printed in ink below the signatures.

13.08 The Bid shall contain an acknowledgment of receipt of all Addenda, the numbers of which shall be filled in on the Bid Form.

13.09 Postal and e-mail addresses and telephone number for communications regarding the Bid shall be shown.

13.10 The Bid shall contain evidence of Bidder’s authority and qualification to do business in the state where the Project is located, or Bidder shall covenant in writing to obtain such authority and qualification prior to award of the Contract and attach such covenant to the Bid. Bidder’s state contractor license number, if any, shall also be shown on the Bid Form.

ARTICLE 14 – BASIS OF BID

14.01 *Unit Price*

A. Bidders shall submit a Bid on a unit price basis for each item of Work listed in the unit price section of the Bid Form.

B. The "Bid Price" (sometimes referred to as the extended price) for each unit price Bid item will be the product of the "Estimated Quantity" (which Owner or its representative has set forth in the Bid Form) for the item and the corresponding "Bid Unit Price" offered by the Bidder. The total of all unit price Bid items will be the sum of these "Bid Prices"; such total will be used by Owner for Bid comparison purposes. The final quantities and Contract Price will be determined in accordance with Paragraph 13.03 of the General Conditions. Modifications to the work may become necessary, Contractor's Unit Price Bids will be used for additional compensation.

C. Discrepancies between the multiplication of units of Work and unit prices will be resolved in favor of the unit prices. Discrepancies between the indicated sum of any column of figures and the correct sum thereof will be resolved in favor of the correct sum.

14.02 Per the City of Bethel Municipal Code Chapter 4.20 Purchasing, local Bidders submitting a bid shall receive a five percent (5%) preference in determining the lowest responsible and responsive bid.

ARTICLE 15 – SUBMITTAL OF BID

15.01 With each copy of the Bidding Documents, a Bidder is furnished one separate unbound copy of the Bid Form, and, if required, the Bid Bond Form. The unbound copy of the Bid Form is to be completed and submitted with the Bid security and the other documents required to be submitted under the terms of Article 7 of the Bid Form.

15.02 A Bid shall be received no later than the date and time prescribed and at the place indicated in the Advertisement for Bid and shall be enclosed in a plainly marked package with the Project title (and, if applicable, the designated portion of the Project for which the Bid is submitted), the name and address of Bidder, and shall be accompanied by the Bid security and other required documents. If a Bid is sent by mail or other delivery system, the sealed envelope containing the Bid shall be enclosed in a separate package plainly marked on the outside with the notation "BID ENCLOSED." When using the mail or other delivery system, the Bidder is totally responsible for the mail or other delivery system delivering the Bid at the place and prior to the time indicated in the Advertisement for Bid. A mailed Bid shall be addressed to City of Bethel, C/O DOWL, ATTN: Jovie Garcia, 4041 B Street, Anchorage, Alaska 99503.

15.03 Bids received after the date and time prescribed for the opening of bids, or not submitted at the correct location or in the designated manner, will not be accepted and will be returned to the Bidder unopened.

ARTICLE 16 – MODIFICATION AND WITHDRAWAL OF BID

16.01 A Bid may be withdrawn by an appropriate document duly executed in the same manner that a Bid must be executed and delivered to the place where Bids are to be submitted prior to the date and time for the opening of Bids. Upon receipt of such notice, the unopened Bid will be returned to the Bidder.

16.02 If a Bidder wishes to modify its Bid prior to Bid opening, Bidder must withdraw its initial Bid in the manner specified in Paragraph 16.01 and submit a new Bid prior to the date and time for the opening of Bids.

16.03 If within 24 hours after Bids are opened any Bidder files a duly signed written notice with Owner and promptly thereafter demonstrates to the reasonable satisfaction of Owner that there was a material and substantial mistake in the preparation of its Bid, that Bidder may withdraw its Bid, and the Bid security will be returned. Thereafter, if the Work is rebid, that Bidder will be disqualified from further bidding on the Work.

ARTICLE 17 – OPENING OF BIDS

17.01 Bids will be opened at the time and place indicated in the Advertisement to Bid and, unless obviously non-responsive, read aloud publicly. An abstract of the amounts of the base Bids and major alternates, if any, will be made available to Bidders after the opening of Bids.

ARTICLE 18 – BIDS TO REMAIN SUBJECT TO ACCEPTANCE

18.01 All Bids will remain subject to acceptance for the period of time stated in the Bid Form, but Owner may, in its sole discretion, release any Bid and return the Bid security prior to the end of this period.

ARTICLE 19 – EVALUATION OF BIDS AND AWARD OF CONTRACT

19.01 Owner reserves the right to reject any or all Bids, including without limitation, nonconforming, nonresponsive, unbalanced, or conditional Bids. Owner will reject the Bid of any Bidder that Owner finds, after reasonable inquiry and evaluation, to not be responsible. If Bidder purports to add terms or conditions to its Bid, takes exception to any provision of the Bidding Documents, or attempts to alter the contents of the Contract Documents for purposes of the Bid, then the Owner will reject the Bid as nonresponsive; provided that Owner also reserves the right to waive all minor informalities not involving price, time, or changes in the Work. Owner also reserves the right to waive all informalities not involving price, time, or changes in the Work and to negotiate contract terms with the Successful Bidder.

19.02 If Owner awards the contract for the Work, such award shall be to the responsible Bidder submitting the lowest responsive Bid.

19.03 More than one Bid for the same Work from an individual or entity under the same or different names will not be considered. Reasonable grounds for believing that any Bidder has an interest in more than one Bid for the Work may be cause for disqualification of that Bidder and the rejection of all Bids in which that Bidder has an interest.

19.04 Evaluation of Bids

A. In evaluating Bids, Owner will consider whether or not the Bids comply with the prescribed requirements, and such alternates, unit prices, and other data, as may be requested in the Bid Form or prior to the Notice of Award.

B. For the determination of the apparent low Bidder when unit price bids are submitted, Bids will be compared on the basis of the total of the products of the estimated quantity of each item and unit price Bid for that item, together with any lump sum items.

19.05 In evaluating whether a Bidder is responsible, Owner will consider the qualifications of the Bidder and may consider the qualifications and experience of Subcontractors and Suppliers

proposed for those portions of the Work for which the identity of Subcontractors and Suppliers must be submitted as provided in the Bidding Documents.

19.06 Owner may conduct such investigations as Owner deems necessary to establish the responsibility, qualifications, and financial ability of Bidders and any proposed Subcontractors, Suppliers, individuals, or entities to perform the Work in accordance with the Contract Documents.

ARTICLE 20 – BONDS AND INSURANCE

20.01 Article 6 of the General Conditions, as may be modified by the Supplementary Conditions, sets forth Owner's requirements as to performance and payment bonds and insurance. When the Successful Bidder delivers the Agreement (executed by Successful Bidder) to Owner, it shall be accompanied by required bonds and insurance documentation.

ARTICLE 21 – SIGNING OF AGREEMENT

21.01 When Owner issues a Notice of Award to the Successful Bidder, it shall be accompanied by the unexecuted counterparts of the Agreement along with the other Contract Documents as identified in the Agreement. Within 15 days thereafter, Successful Bidder shall execute and deliver the required number of counterparts of the Agreement (and any bonds and insurance documentation required to be delivered by the Contract Documents) to Owner. Within ten days thereafter, Owner shall deliver one fully executed counterpart of the Agreement to Successful Bidder, together with printed and electronic copies of the Contract Documents as stated in Paragraph 2.02 of the General Conditions.

21.02 This Contract is expected to be funded in part with funds provided by State of Alaska Department of Commerce, Community, and Economic Development (DCCED). Refer to 00 73 00 Supplementary Conditions for State Requirements.

ARTICLE 22 – SALES AND USE TAXES

NOTE USED

ARTICLE 23 – CONTRACTS TO BE ASSIGNED

NOT USED

ARTICLE 24 – WAGE RATE REQUIREMENTS

24.01 The prevailing wage rates of the State of Alaska apply to this contract as do any requirements of the State of Alaska associated with the use of these State prevailing wages.

ARTICLE 25 – BID PROTESTS

25.01 A Bidder may protest a bid result in writing to the Owner within (7) seven calendar days of the Bid opening. Any protests received after seven days will not be accepted. Oral protest will not be accepted.

25.02 In order for a protest to be granted a Bidder must prove by preponderance of the evidence that their Bid was the lowest responsive, responsible Bid.

END OF SECTION 00 21 13

SECTION 00 41 13

BID FORM

TABLE OF CONTENTS

Page

Article 1 – Bid Recipient 2
Article 2 – Bidder's Acknowledgements 2
Article 3 – Bidder's Representations 2
Article 4 – Bidder's Certification 3
Article 5 – Basis of Bid 4
Article 6 – Time of Completion 5
Article 7 – Attachments to this Bid 5
Article 8 – Defined Terms 6
Article 9 – Bid Submittal 7

ARTICLE 1 – BID RECIPIENT

1.01 This Bid is submitted to:

City of Bethel
ATTN: Jovie Garcia, DOWL

4041 B St.

Anchorage, AK 99503

1.02 The undersigned Bidder proposes and agrees, if this Bid is accepted, to enter into an Agreement with Owner in the form included in the Bidding Documents to perform all Work as specified or indicated in the Bidding Documents for the prices and within the times indicated in this Bid and in accordance with the other terms and conditions of the Bidding Documents.

ARTICLE 2 – BIDDER'S ACKNOWLEDGEMENTS

2.01 Bidder accepts all of the terms and conditions of the Advertisement and Instructions to Bidders, including without limitation those dealing with the disposition of Bid security. This Bid will remain subject to acceptance for 60 days after the Bid opening, or for such longer period of time that Bidder may agree to in writing upon request of Owner.

ARTICLE 3 – BIDDER'S REPRESENTATIONS

3.01 In submitting this Bid, Bidder represents that:

A. Bidder has examined and carefully studied the Bidding Documents, and any data and reference items identified in the Bidding Documents, and hereby acknowledges receipt of the following Addenda:

Addendum No.	Addendum Date
_____	_____
_____	_____
_____	_____
_____	_____
_____	_____

B. Bidder has visited the Site and become familiar with and satisfied as to the general, local, and Site conditions that may affect cost, progress, and performance of the Work.

C. Bidder is familiar with and has satisfied itself as to all federal, state and local Laws and Regulations that may affect cost, progress, and performance of the Work.

D. Bidder has carefully studied all: (1) reports of explorations and tests of subsurface conditions at or adjacent to the Site and all drawings of physical conditions relating to existing surface or subsurface structures at the Site that have been identified in the Supplementary Conditions, especially with respect to Technical Data in such reports and drawings, and (2) reports and drawings relating to Hazardous Environmental Conditions, if any, at or adjacent to the Site that have been identified in the Supplementary Conditions, especially with respect to Technical Data in such reports and drawings.

E. Bidder has considered the information known to Bidder itself; information commonly known to contractors doing business in the locality of the Site; information and observations obtained from visits to the Site; the Bidding Documents; and any Site-related reports and drawings identified in the Bidding Documents, with respect to the effect of such information, observations, and documents on (1) the cost, progress, and performance of the Work; (2) the means, methods, techniques, sequences, and procedures of construction to be employed by Bidder; and (3) Bidder's safety precautions and programs.

F. Bidder agrees, based on the information and observations referred to in the preceding paragraph, that no further examinations, investigations, explorations, tests, studies, or data are necessary for the determination of this Bid for performance of the Work at the price bid and within the times required, and in accordance with the other terms and conditions of the Bidding Documents.

G. Bidder is aware of the general nature of work to be performed by Owner and others at the Site that relates to the Work as indicated in the Bidding Documents.

H. Bidder has given Engineer written notice of all conflicts, errors, ambiguities, or discrepancies that Bidder has discovered in the Bidding Documents, and confirms that the written resolution thereof by Engineer is acceptable to Bidder.

I. The Bidding Documents are generally sufficient to indicate and convey understanding of all terms and conditions for the performance and furnishing of the Work.

J. Bidder will submit written evidence of its authority to do business in the State or other jurisdiction where the Project is located not later than the date of its execution of the 00 52 13 Agreement.

K. The submission of this Bid constitutes an incontrovertible representation by Bidder that Bidder has complied with every requirement of this Article, and that without exception the Bid and all prices in the Bid are premised upon performing and furnishing the Work required by the Bidding Documents.

ARTICLE 4 – BIDDER'S CERTIFICATION

4.01 Bidder certifies that:

A. This Bid is genuine and not made in the interest of or on behalf of any undisclosed individual or entity and is not submitted in conformity with any collusive agreement or rules of any group, association, organization, or corporation;

B. Bidder has not directly or indirectly induced or solicited any other Bidder to submit a false or sham Bid;

C. Bidder has not solicited or induced any individual or entity to refrain from bidding; and

D. Bidder has not engaged in corrupt, fraudulent, collusive, or coercive practices in competing for the Contract. For the purposes of this Paragraph 4.01.D:

1. "corrupt practice" means the offering, giving, receiving, or soliciting of anything of value likely to influence the action of a public official in the bidding process;

2. "fraudulent practice" means an intentional misrepresentation of facts made (a) to influence the bidding process to the detriment of Owner, (b) to establish bid prices at artificial non-competitive levels, or (c) to deprive Owner of the benefits of free and open competition;

3. "collusive practice" means a scheme or arrangement between two or more Bidders, with or without the knowledge of Owner, a purpose of which is to establish bid prices at artificial, non-competitive levels; and

4. "coercive practice" means harming or threatening to harm, directly or indirectly, persons or their property to influence their participation in the bidding process or affect the e execution of the Contract.

ARTICLE 5 – BASIS OF BID

5.01 Bidder will complete the Work in accordance with the Contract Documents for the following price(s) listed in Section 00 43 22 Unit Prices Form.

A portion of the piping material required for this construction project has been pre-purchased by the Owner (under a separate contract) and will be made available (in Bethel) for use by the Contractor in completing the work under this Contract. An itemized list describing the type and quantity of available pre-purchased material is attached (Attachment B). Bidders shall review the Contract Documents to determine additional materials that may be required to complete the work. Any requisite materials that have not been pre-purchased by the Owner shall be furnished and installed by the Contractor.

UNIT PRICE

Name	Quantity	Unit Measurement	Unit Price	Total Unit Price
101-Mobilization	1	Lump Sum		
102-Construction Survey	1	Lump Sum		
103-Erosion and Pollution Control	1	Lump Sum		
104-Service Connect and Stub-out Boxes	17	EA		
105a-Facility Service Connection	9	EA		
105b- Transition Existing Service	3	EA		
106-Fire hydrants	15	EA		
107-Existing Service Circulation Pump Reversal	24	EA		
108-Air Releases	8	EA		
109- Access Tees	1	EA		
110-Installation of Water Main	6,890	LF		
111-Standard Service Lines with Owner Procured Carrier Pipe (1" or 2" supply, and 1" return)	1,650	LF		
112- Hospital Service	1	LS		
113-CEHH Crossing	1	EA		
114-Furnish and Install Helical Pier Anchor	68	EA		

115- Install owner provided Helical Pier Anchor and Furnish and Install Pipeline Support	100	EA		
116- Furnish and Install Support Blocks	979	EA		
117-Electrical Heat Trace-Service Lines	4,200	LF		
118-Glycol Loop- Main Line	13,800	LF		
119-Direct Bury Crossing	1	EA		
120-Casing Crossing	2	EA		
121- Remove and Replace Boardwalk for Installation	30	LF		
122- Tie in to Existing Loop "A"	1	LS		
123- Mechanical Upgrades	1	Lump Sum		
124-Electrical Upgrades	1	Lump Sum		
125- Instrumentation	1	Lump Sum		
			Total Construction Price	

Unit Prices have been computed in accordance with paragraph 11.03.B of the General Conditions. Bidder acknowledges that estimated quantities are not guaranteed, and are solely for the purpose of comparison of Bids, and final payment for all Unit Price Bid items will be based on actual quantities, determined as provided in the Contract Documents.

ARTICLE 6 – TIME OF COMPLETION

6.01 Bidder agrees that the Work will be substantially complete and will be completed and ready for final payment in accordance with Paragraph 15.06 of the General Conditions on or before the dates or within the number of calendar days indicated in the Agreement.

6.02 Bidder accepts the provisions of the Agreement as to liquidated damages.

ARTICLE 7 – ATTACHMENTS TO THIS BID

7.01 The following documents are submitted with and made a condition of this Bid:

A. Required Bid security;

B. List of Proposed Subcontractors;

C. List of Proposed Suppliers;

D. List of Project References, which indicates experience with water main and water service construction in arctic environment;

E. Evidence of authority to do business in the state of the Project; or a written covenant to obtain such license within the time for acceptance of Bids;

F. Contractor's License No.: _____;

G. Required Bidder Qualification Statement with supporting data;

H. If a local Bidder a signed letter stating status as a local Bidder and show that the Bidder complies with the definition of a local bidder as found in Article 1, Instruction to Bidders;

I. Signed and completed Bid Schedule or submittal.

ARTICLE 8 – DEFINED TERMS

8.01 The terms used in this Bid with initial capital letters have the meanings stated in the Instructions to Bidders, the General Conditions, and the Supplementary Conditions.

ARTICLE 9 – BID SUBMITTAL

BIDDER: *[Indicate correct name of bidding entity]*

_____

By:
[Signature] _____

[Printed name] _____
(If Bidder is a corporation, a limited liability company, a partnership, or a joint venture, attach evidence of authority to sign.)

Attest:
[Signature] _____

[Printed name] _____

Title: _____

Submittal Date: _____

Address for giving notices:

_____

_____

_____

Telephone Number: _____

Fax Number: _____

Contact Name and e-mail address: _____

_____

Bidder's License No.: _____
(where applicable)

END OF SECTION 00 41 13

SECTION 00 43 13 BID BOND

Any singular reference to Bidder, Surety, Owner or other party shall be considered plural where applicable.

BIDDER *(Name and Address)*:

SURETY *(Name, and Address of Principal Place of Business)*:

OWNER *(Name and Address)*:
City of Bethel
P.O. Box 1388
Bethel, Alaska 99559

BID
Bid Due Date:
Description *(Project Name— Include Location)*:

BOND
Bond Number:
Date:
Penal sum _____ $ _____
(Words) (Figures)

Surety and Bidder, intending to be legally bound hereby, subject to the terms set forth below, do each cause this Bid Bond to be duly executed by an authorized officer, agent, or representative.

BIDDER	**SURETY**
_____ (Seal)	_____ (Seal)
Bidder's Name and Corporate Seal	Surety's Name and Corporate Seal
By: _____	By: _____
Signature	Signature (Attach Power of Attorney)
_____	_____
Print Name	Print Name
_____	_____
Title	Title
Attest: _____	Attest: _____
Signature	Signature
Title	Title

Note: Addresses are to be used for giving any required notice.
Provide execution by any additional parties, such as joint venturers, if necessary.

1. Bidder and Surety, jointly and severally, bind themselves, their heirs, executors, administrators, successors, and assigns to pay to Owner upon default of Bidder the penal sum set forth on the face of this Bond. Payment of the penal sum is the extent of Bidder's and Surety's liability. Recovery of such penal sum under the terms of this Bond shall be Owner's sole and exclusive remedy upon default of Bidder.

2. Default of Bidder shall occur upon the failure of Bidder to deliver within the time required by the Bidding Documents (or any extension thereof agreed to in writing by Owner) the executed Agreement required by the Bidding Documents and any performance and payment bonds required by the Bidding Documents.

3. This obligation shall be null and void if:

3.1 Owner accepts Bidder's Bid and Bidder delivers within the time required by the Bidding Documents (or any extension thereof agreed to in writing by Owner) the executed Agreement required by the Bidding Documents and any performance and payment bonds required by the Bidding Documents, or

3.2 All Bids are rejected by Owner, or

3.3 Owner fails to issue a Notice of Award to Bidder within the time specified in the Bidding Documents (or any extension thereof agreed to in writing by Bidder and, if applicable, consented to by Surety when required by Paragraph 5 hereof).

4. Payment under this Bond will be due and payable upon default of Bidder and within 30 calendar days after receipt by Bidder and Surety of written notice of default from Owner, which notice will be given with reasonable promptness, identifying this Bond and the Project and including a statement of the amount due.

5. Surety waives notice of any and all defenses based on or arising out of any time extension to issue Notice of Award agreed to in writing by Owner and Bidder, provided that the total time for issuing Notice of Award including extensions shall not in the aggregate exceed 120 days from the Bid due date without Surety's written consent.

6. No suit or action shall be commenced under this Bond prior to 30 calendar days after the notice of default required in Paragraph 4 above is received by Bidder and Surety and in no case later than one year after the Bid due date.

7. Any suit or action under this Bond shall be commenced only in a court of competent jurisdiction located in the state in which the Project is located.

8. Notices required hereunder shall be in writing and sent to Bidder and Surety at their respective addresses shown on the face of this Bond. Such notices may be sent by personal delivery, commercial courier, or by United States Registered or Certified Mail, return receipt requested, postage pre-paid, and shall be deemed to be effective upon receipt by the party concerned.

9. Surety shall cause to be attached to this Bond a current and effective Power of Attorney evidencing the authority of the officer, agent, or representative who executed this Bond on behalf of Surety to execute, seal, and deliver such Bond and bind the Surety thereby.

10. This Bond is intended to conform to all applicable statutory requirements. Any applicable requirement of any applicable statute that has been omitted from this Bond shall be deemed to be included herein as if set forth at length. If any provision of this Bond conflicts with any applicable statute, then the provision of said statute shall govern and the remainder of this Bond that is not in conflict therewith shall continue in full force and effect.

11. The term "Bid" as used herein includes a Bid, offer, or proposal as applicable.

SECTION 00 52 13

AGREEMENT
BETWEEN OWNER AND CONTRACTOR
FOR CONSTRUCTION CONTRACT (STIPULATED PRICE)

THIS AGREEMENT is by and between **City of Bethel P.O. Box 1388 Bethel, AK 99559** ("Owner") and _____ ("Contractor").

Owner and Contractor hereby agree as follows:

ARTICLE 1 – WORK

1.01 Contractor shall complete all Work as specified or indicated in the Contract Documents. The Work is generally described as follows:

ARTICLE 2 – THE PROJECT

2.01 The Project, of which the Work under the Contract Documents is a part, is generally described as follows: **All materials, equipment, labor, and related services to construct the Bethel Institutional Corridor Piped Water System: DCCED Grant #14-DC-042. This project scope consists of constructing approximately 6,900 feet of above-ground insulated water main from the City Subdivision water treatment plant on Akiak Street to the Chief Eddie Hoffman Highway where it runs parallel to the highway until the adult Corrections Facility where it crosses the highway and runs past institutions until it connects with the existing City Subdivision Distribution Loop "A". Improvements to the water treatment plant and approximately 2,100 feet of service lines are included in this project.**

ARTICLE 3 – ENGINEER

3.01 The Project has been designed by DOWL 4041 B Street, Anchorage, AK 99503

3.02 The Owner has retained DOWL ("Engineer") to act as Owner's representative, assume all duties and responsibilities, and have the rights and authority assigned to Engineer in the Contract Documents in connection with the completion of the Work in accordance with the Contract Documents.

ARTICLE 4 – CONTRACT TIMES

4.01 *Time of the Essence*

A. All time limits for Milestones, if any, Substantial Completion, and completion and readiness for final payment as stated in the Contract Documents are of the essence of the Contract.

4.02 *Contract Times: Dates*

A. The Work will be substantially completed on or before September 30th, 2016, and completed and ready for final payment in accordance with Paragraph 15.06 of the General Conditions on or before December 31st, 2016.

Copyright © 2013 National Society of Professional Engineers, American Council of Engineering Companies, and American Society of Civil Engineers. All rights reserved.

4.03 *Liquidated Damages*

A. Contractor and Owner recognize that time is of the essence as stated in Paragraph 4.01 above and that Owner will suffer financial and other losses if the Work is not completed and Milestones not achieved within the times specified in Paragraph 4.02 above, plus any extensions thereof allowed in accordance with the Contract. The parties also recognize the delays, expense, and difficulties involved in proving in a legal or arbitration proceeding the actual loss suffered by Owner if the Work is not completed on time. Accordingly, instead of requiring any such proof, Owner and Contractor agree that as liquidated damages for delay (but not as a penalty):

1. Substantial Completion: Contractor shall pay Owner $___1,500____ for each day that expires after the time (as duly adjusted pursuant to the Contract) specified in Paragraph 4.02.A above for Substantial Completion until the Work is substantially complete.

2. Completion of Remaining Work: After Substantial Completion, if Contractor shall neglect, refuse, or fail to complete the remaining Work within the Contract Time (as duly adjusted pursuant to the Contract) for completion and readiness for final payment, Contractor shall pay Owner $___500____ for each day that expires after such time until the Work is completed and ready for final payment.

3. Liquidated damages for failing to timely attain Substantial Completion and final completion are not additive and will not be imposed concurrently.

~~4. Milestones: Contractor shall pay Owner $_____ for each day that expires after the time (as duly adjusted pursuant to the Contract) specified above for achievement of Milestone 1, until Milestone 1 is achieved.~~

~~B. *Bonus*: Contractor and Owner further recognize the Owner will realize financial and other benefits if the Work is completed prior to the time specified for Substantial Completion. Accordingly, Owner and Contractor agree that as a bonus for early completion, Owner shall pay Contractor $_____ for each day prior to the time specified in Paragraph 4.02 for Substantial Completion (as duly adjusted pursuant to the Contract) that the Work is substantially complete. The maximum value of the bonus shall be limited to $_____.~~

ARTICLE 5 – CONTRACT PRICE

5.01 Owner shall pay Contractor for completion of the Work in accordance with the Contract Documents the amounts that follow, subject to adjustment under the Contract:

A. For all Work, at the prices stated in Contractor's Bid, attached hereto as an exhibit.

ARTICLE 6 – PAYMENT PROCEDURES

6.01 *Submittal and Processing of Payments*

A. Contractor shall submit Applications for Payment in accordance with Article 15 of the General Conditions. Applications for Payment will be processed by Engineer as provided in the General Conditions.

6.02 *Progress Payments; Retainage*

A. Owner shall make progress payments on account of the Contract Price on the basis of Contractor's Applications for Payment on or about the __1st (first)_ day of each month

Copyright © 2013 National Society of Professional Engineers, American Council of Engineering Companies, and American Society of Civil Engineers. All rights reserved.

during performance of the Work as provided in Paragraph 6.02.A.1 below, provided that such Applications for Payment have been submitted in a timely manner and otherwise meet the requirements of the Contract. All such payments will be measured by the Schedule of Values established as provided in the General Conditions (and in the case of Unit Price Work based on the number of units completed) or, in the event there is no Schedule of Values, as provided elsewhere in the Contract.

1. Prior to Substantial Completion, progress payments will be made in an amount equal to the percentage indicated below but, in each case, less the aggregate of payments previously made and less such amounts as Owner may withhold, including but not limited to liquidated damages, in accordance with the Contract

   a. Ninety (90) percent of Work completed (with the balance being retainage), and

   b. Ninety (90) percent of cost of materials and equipment not incorporated in the Work (with the balance being retainage).

B. Upon Substantial Completion of the entire Work to be provided under the Contact Documents, Owner shall pay an amount sufficient to increase total payments to Contractor to **Ninety-eight (98)** percent of the Work completed, less such amounts set off by Owner pursuant to Paragraph 15.01.E of the General Conditions, and less **Two Hundred (200)** percent of Engineer's estimate of the value of Work to be completed or corrected as shown on the punch list of items to be completed or corrected prior to final payment.

6.03 *Final Payment*

A. Upon final completion and acceptance of the Work in accordance with Paragraph 15.06 of the General Conditions, Owner shall pay the remainder of the Contract Price as recommended by Engineer as provided in said Paragraph 15.06.

ARTICLE 7 – INTEREST

7.01 All amounts not paid when due shall bear interest at the rate of **Eight (8)** percent per annum.

ARTICLE 8 – CONTRACTOR'S REPRESENTATIONS

8.01 In order to induce Owner to enter into this Contract, Contractor makes the following representations:

A. Contractor has examined and carefully studied the Contract Documents, and any data and reference items identified in the Contract Documents.

B. Contractor has visited the Site, conducted a thorough, alert visual examination of the Site and adjacent areas, and become familiar with and is satisfied as to the general, local, and Site conditions that may affect cost, progress, and performance of the Work.

C. Contractor is familiar with and is satisfied as to all Laws and Regulations that may affect cost, progress, and performance of the Work.

D. Contractor has carefully studied all: (1) reports of explorations and tests of subsurface conditions at or adjacent to the Site and all drawings of physical conditions relating to existing surface or subsurface structures at the Site that have been identified in the Supplementary Conditions, especially with respect to Technical Data in such reports and drawings, and (2) reports and drawings relating to Hazardous Environmental Conditions, if

Copyright © 2013 National Society of Professional Engineers, American Council of Engineering Companies, and American Society of Civil Engineers. All rights reserved.

any, at or adjacent to the Site that have been identified in the Supplementary Conditions, especially with respect to Technical Data in such reports and drawings.

E. Contractor has considered the information known to Contractor itself; information commonly known to contractors doing business in the locality of the Site; information and observations obtained from visits to the Site; the Contract Documents; and the Site-related reports and drawings identified in the Contract Documents, with respect to the effect of such information, observations, and documents on (1) the cost, progress, and performance of the Work; (2) the means, methods, techniques, sequences, and procedures of construction to be employed by Contractor; and (3) Contractor's safety precautions and programs.

F. Based on the information and observations referred to in the preceding paragraph, Contractor agrees that no further examinations, investigations, explorations, tests, studies, or data are necessary for the performance of the Work at the Contract Price, within the Contract Times, and in accordance with the other terms and conditions of the Contract.

G. Contractor is aware of the general nature of work to be performed by Owner and others at the Site that relates to the Work as indicated in the Contract Documents.

H. Contractor has given Engineer written notice of all conflicts, errors, ambiguities, or discrepancies that Contractor has discovered in the Contract Documents, and the written resolution thereof by Engineer is acceptable to Contractor.

I. The Contract Documents are generally sufficient to indicate and convey understanding of all terms and conditions for performance and furnishing of the Work.

J. Contractor's entry into this Contract constitutes an incontrovertible representation by Contractor that without exception all prices in the Agreement are premised upon performing and furnishing the Work required by the Contract Documents.

ARTICLE 9 – CONTRACT DOCUMENTS

9.01 *Contents*

A. The Contract Documents consist of the following:

1. This Agreement (EJCDC C-520 pages 1 to 7, inclusive).
2. Performance bond (EJCDC C-610 pages 1 to 3, inclusive).
3. Payment bond (EJCDC C-610 pages 1 to 3, inclusive).
4. Other bonds.
   a. ___ (pages ___ to ___, inclusive).
5. General Conditions (EJCDC C-700 pages 1 to 68, inclusive).
6. Supplementary Conditions (EJCDC C-800 pages 1 to 7, inclusive).
7. Specifications as listed in the table of contents of the Project Manual.
8. Drawings (not attached but incorporated by reference) consisting of 45 sheets with each sheet bearing the following general title: Institutional Corridor Piped Water System
9. Addenda (numbers ____ to ____, inclusive).
10. Exhibits to this Agreement (enumerated as follows):

Copyright © 2013 National Society of Professional Engineers, American Council of Engineering Companies, and American Society of Civil Engineers. All rights reserved.

a. Contractor's Bid (pages ____ to ____, inclusive).

11. The following which may be delivered or issued on or after the Effective Date of the Contract and are not attached hereto:

a. Notice to Proceed.

b. Work Change Directives.

c. Change Orders.

d. Field Orders.

B. The documents listed in Paragraph 9.01.A are attached to this Agreement (except as expressly noted otherwise above).

C. There are no Contract Documents other than those listed above in this Article 9.

D. The Contract Documents may only be amended, modified, or supplemented as provided in the General Conditions.

ARTICLE 10 – MISCELLANEOUS

10.01 *Terms*

A. Terms used in this Agreement will have the meanings stated in the General Conditions and the Supplementary Conditions.

10.02 *Assignment of Contract*

A. Unless expressly agreed to elsewhere in the Contract, no assignment by a party hereto of any rights under or interests in the Contract will be binding on another party hereto without the written consent of the party sought to be bound; and, specifically but without limitation, money that may become due and money that is due may not be assigned without such consent (except to the extent that the effect of this restriction may be limited by law), and unless specifically stated to the contrary in any written consent to an assignment, no assignment will release or discharge the assignor from any duty or responsibility under the Contract Documents.

10.03 *Successors and Assigns*

A. Owner and Contractor each binds itself, its successors, assigns, and legal representatives to the other party hereto, its successors, assigns, and legal representatives in respect to all covenants, agreements, and obligations contained in the Contract Documents.

10.04 *Severability*

A. Any provision or part of the Contract Documents held to be void or unenforceable under any Law or Regulation shall be deemed stricken, and all remaining provisions shall continue to be valid and binding upon Owner and Contractor, who agree that the Contract Documents shall be reformed to replace such stricken provision or part thereof with a valid and enforceable provision that comes as close as possible to expressing the intention of the stricken provision.

10.05 *Contractor's Certifications*

A. Contractor certifies that it has not engaged in corrupt, fraudulent, collusive, or coercive practices in competing for or in executing the Contract. For the purposes of this Paragraph 10.05:

Copyright © 2013 National Society of Professional Engineers, American Council of Engineering Companies, and American Society of Civil Engineers. All rights reserved.

1. "corrupt practice" means the offering, giving, receiving, or soliciting of any thing of value likely to influence the action of a public official in the bidding process or in the Contract execution;
2. "fraudulent practice" means an intentional misrepresentation of facts made (a) to influence the bidding process or the execution of the Contract to the detriment of Owner, (b) to establish Bid or Contract prices at artificial non-competitive levels, or (c) to deprive Owner of the benefits of free and open competition;
3. "collusive practice" means a scheme or arrangement between two or more Bidders, with or without the knowledge of Owner, a purpose of which is to establish Bid prices at artificial, non-competitive levels; and
4. "coercive practice" means harming or threatening to harm, directly or indirectly, persons or their property to influence their participation in the bidding process or affect the execution of the Contract.

10.06 *Other Provisions*

A. Owner stipulates that if the General Conditions that are made a part of this Contract are based on EJCDC® C-700, Standard General Conditions for the Construction Contract, published by the Engineers Joint Contract Documents Committee®, and if Owner is the party that has furnished said General Conditions, then Owner has plainly shown all modifications to the standard wording of such published document to the Contractor, through a process such as highlighting or "track changes" (redline/strikeout), or in the Supplementary Conditions.

Copyright © 2013 National Society of Professional Engineers, American Council of Engineering Companies, and American Society of Civil Engineers. All rights reserved.

IN WITNESS WHEREOF, Owner and Contractor have signed this Agreement.

This Agreement will be effective on _____ (which is the Effective Date of the Contract).

OWNER:	CONTRACTOR:
City of Bethel	_____
By: _____	By: _____
Title: _____	Title: _____
	(If Contractor is a corporation, a partnership, or a joint venture, attaches evidence of authority to sign.)
Attest: _____	Attest: _____
Title: _____	Title: _____
Address for giving notices:	Address for giving notices:
_____	_____
_____	_____
_____	_____
	License or Registration No.: _____ *(where applicable)*

Copyright © 2013 National Society of Professional Engineers, American Council of Engineering Companies, and American Society of Civil Engineers. All rights reserved.

EJCDC
ENGINEERS JOINT CONTRACT DOCUMENTS COMMITTEE

SECTION 00 61 13.13 PERFORMANCE BOND

CONTRACTOR *(name and address)*:

SURETY *(name and address of principal place of business)*:

OWNER *(name and address)*:
City of Bethel
P.O. Box 1388
Bethel, Alaska 99559

CONSTRUCTION CONTRACT
Effective Date of the Agreement:
Amount:
Description *(name and location)*:

BOND
Bond Number:
Date *(not earlier than the Effective Date of the Agreement of the Construction Contract)*:
Amount:
Modifications to this Bond Form: ☐ None ☐ See Paragraph 16

Surety and Contractor, intending to be legally bound hereby, subject to the terms set forth below, do each cause this Performance Bond to be duly executed by an authorized officer, agent, or representative.

CONTRACTOR AS PRINCIPAL

_____ *(seal)*
Contractor's Name and Corporate Seal

By: _____
Signature

_____
Print Name

_____
Title

Attest:_____
Signature

_____
Title

SURETY

_____ *(seal)*
Surety's Name and Corporate Seal

By:_____
Signature *(attach power of attorney)*

_____
Print Name

_____
Title

Attest:_____
Signature

_____
Title

Notes: (1) Provide supplemental execution by any additional parties, such as joint venturers. (2) Any singular reference to Contractor, Surety, Owner, or other party shall be considered plural where applicable.

Copyright © 2013 National Society of Professional Engineers, American Council of Engineering Companies, and American Society of Civil Engineers. All rights reserved.

1. The Contractor and Surety, jointly and severally, bind themselves, their heirs, executors, administrators, successors, and assigns to the Owner for the performance of the Construction Contract, which is incorporated herein by reference.

2. If the Contractor performs the Construction Contract, the Surety and the Contractor shall have no obligation under this Bond, except when applicable to participate in a conference as provided in Paragraph 3.

3. If there is no Owner Default under the Construction Contract, the Surety's obligation under this Bond shall arise after:

3.1 The Owner first provides notice to the Contractor and the Surety that the Owner is considering declaring a Contractor Default. Such notice shall indicate whether the Owner is requesting a conference among the Owner, Contractor, and Surety to discuss the Contractor's performance. If the Owner does not request a conference, the Surety may, within five (5) business days after receipt of the Owner's notice, request such a conference. If the Surety timely requests a conference, the Owner shall attend. Unless the Owner agrees otherwise, any conference requested under this Paragraph 3.1 shall be held within ten (10) business days of the Surety's receipt of the Owner's notice. If the Owner, the Contractor, and the Surety agree, the Contractor shall be allowed a reasonable time to perform the Construction Contract, but such an agreement shall not waive the Owner's right, if any, subsequently to declare a Contractor Default;

3.2 The Owner declares a Contractor Default, terminates the Construction Contract and notifies the Surety; and

3.3 The Owner has agreed to pay the Balance of the Contract Price in accordance with the terms of the Construction Contract to the Surety or to a contractor selected to perform the Construction Contract.

4. Failure on the part of the Owner to comply with the notice requirement in Paragraph 3.1 shall not constitute a failure to comply with a condition precedent to the Surety's obligations, or release the Surety from its obligations, except to the extent the Surety demonstrates actual prejudice.

5. When the Owner has satisfied the conditions of Paragraph 3, the Surety shall promptly and at the Surety's expense take one of the following actions:

5.1 Arrange for the Contractor, with the consent of the Owner, to perform and complete the Construction Contract;

5.2 Undertake to perform and complete the Construction Contract itself, through its agents or independent contractors;

5.3 Obtain bids or negotiated proposals from qualified contractors acceptable to the Owner for a contract for performance and completion of the Construction Contract, arrange for a contract to be prepared for execution by the Owner and a contractor selected with the Owners concurrence, to be secured with performance and payment bonds executed by a qualified surety equivalent to the bonds issued on the Construction Contract, and pay to the Owner the amount of damages as described in Paragraph 7 in excess of the Balance of the Contract Price incurred by the Owner as a result of the Contractor Default; or

5.4 Waive its right to perform and complete, arrange for completion, or obtain a new contractor, and with reasonable promptness under the circumstances:

5.4.1 After investigation, determine the amount for which it may be liable to the Owner and, as soon as practicable after the amount is determined, make payment to the Owner; or

5.4.2 Deny liability in whole or in part and notify the Owner, citing the reasons for denial.

6. If the Surety does not proceed as provided in Paragraph 5 with reasonable promptness, the Surety shall be deemed to be in default on this Bond seven days after receipt of an additional written notice from the Owner to the Surety demanding that the Surety perform its obligations under this Bond, and the Owner shall be entitled to enforce any remedy available to the Owner. If the Surety proceeds as provided in Paragraph 5.4, and the Owner refuses the payment or the Surety has denied liability, in whole or in part, without further notice the Owner shall be entitled to enforce any remedy available to the Owner.

7. If the Surety elects to act under Paragraph 5.1, 5.2, or 5.3, then the responsibilities of the Surety to the Owner shall not be greater than those of the Contractor under the Construction Contract, and the responsibilities of the Owner to the Surety shall not be greater than those of the Owner under the Construction Contract. Subject to the commitment by the Owner to pay the Balance of the Contract Price, the Surety is obligated, without duplication for:

7.1 the responsibilities of the Contractor for correction of defective work and completion of the Construction Contract;

7.2 additional legal, design professional, and delay costs resulting from the Contractor's Default, and resulting from the actions or failure to act of the Surety under Paragraph 5; and

7.3 liquidated damages, or if no liquidated damages are specified in the Construction Contract, actual damages caused by delayed performance or non-performance of the Contractor.

8. If the Surety elects to act under Paragraph 5.1, 5.3, or 5.4, the Surety's liability is limited to the amount of this Bond.

9. The Surety shall not be liable to the Owner or others for obligations of the Contractor that are unrelated to the Construction Contract, and the Balance of the Contract Price shall not be reduced or set off on account of any such unrelated obligations. No right of action shall accrue on this Bond to any person or entity other than the Owner or its heirs, executors, administrators, successors, and assigns.

Copyright © 2013 National Society of Professional Engineers, American Council of Engineering Companies, and American Society of Civil Engineers. All rights reserved.

10. The Surety hereby waives notice of any change, including changes of time, to the Construction Contract or to related subcontracts, purchase orders, and other obligations.

11. Any proceeding, legal or equitable, under this Bond may be instituted in any court of competent jurisdiction in the location in which the work or part of the work is located and shall be instituted within two years after a declaration of Contractor Default or within two years after the Contractor ceased working or within two years after the Surety refuses or fails to perform its obligations under this Bond, whichever occurs first. If the provisions of this paragraph are void or prohibited by law, the minimum periods of limitations available to sureties as a defense in the jurisdiction of the suit shall be applicable.

12. Notice to the Surety, the Owner, or the Contractor shall be mailed or delivered to the address shown on the page on which their signature appears.

13. When this Bond has been furnished to comply with a statutory or other legal requirement in the location where the construction was to be performed, any provision in this Bond conflicting with said statutory or legal requirement shall be deemed deleted herefrom and provisions conforming to such statutory or other legal requirement shall be deemed incorporated herein. When so furnished, the intent is that this Bond shall be construed as a statutory bond and not as a common law bond.

14. Definitions

14.1 Balance of the Contract Price: The total amount payable by the Owner to the Contractor under the Construction Contract after all proper adjustments have been made including allowance for the Contractor for any amounts received or to be received by the Owner in settlement of insurance or other claims for damages to which the Contractor is entitled, reduced by all valid and proper payments made to or on behalf of the Contractor under the Construction Contract.

14.2 Construction Contract: The agreement between the Owner and Contractor identified on the cover page, including all Contract Documents and changes made to the agreement and the Contract Documents.

14.3 Contractor Default: Failure of the Contractor, which has not been remedied or waived, to perform or otherwise to comply with a material term of the Construction Contract.

14.4 Owner Default: Failure of the Owner, which has not been remedied or waived, to pay the Contractor as required under the Construction Contract or to perform and complete or comply with the other material terms of the Construction Contract.

14.5 Contract Documents: All the documents that comprise the agreement between the Owner and Contractor.

15. If this Bond is issued for an agreement between a contractor and subcontractor, the term Contractor in this Bond shall be deemed to be Subcontractor and the term Owner shall be deemed to be Contractor.

16. Modifications to this Bond are as follows:

Copyright © 2013 National Society of Professional Engineers, American Council of Engineering Companies, and American Society of Civil Engineers. All rights reserved.

EJCDC
ENGINEERS JOINT CONTRACT DOCUMENTS COMMITTEE

SECTION 00 61 13.16 PAYMENT BOND

CONTRACTOR *(name and address)*:

SURETY *(name and address of principal place of business)*:

OWNER *(name and address)*:
City of Bethel
P.O. Box 1388
Bethel, Alaska 99559

CONSTRUCTION CONTRACT
Effective Date of the Agreement:
Amount:
Description *(name and location)*:

BOND
Bond Number:
Date *(not earlier than the Effective Date of the Agreement of the Construction Contract)*:
Amount:
Modifications to this Bond Form: ☐ None ☐ See Paragraph 18

Surety and Contractor, intending to be legally bound hereby, subject to the terms set forth below, do each cause this Payment Bond to be duly executed by an authorized officer, agent, or representative.

CONTRACTOR AS PRINCIPAL

_____ *(seal)*
Contractor's Name and Corporate Seal

By: _____
Signature

_____
Print Name

_____
Title

Attest: _____
Signature

_____
Title

SURETY

_____ *(seal)*
Surety's Name and Corporate Seal

By: _____
Signature *(attach power of attorney)*

_____
Print Name

_____
Title

Attest: _____
Signature

_____
Title

Notes: (1) Provide supplemental execution by any additional parties, such as joint venturers. (2) Any singular reference to Contractor, Surety, Owner, or other party shall be considered plural where applicable.

Copyright © 2013 National Society of Professional Engineers, American Council of Engineering Companies, and American Society of Civil Engineers. All rights reserved.

1. The Contractor and Surety, jointly and severally, bind themselves, their heirs, executors, administrators, successors, and assigns to the Owner to pay for labor, materials, and equipment furnished for use in the performance of the Construction Contract, which is incorporated herein by reference, subject to the following terms.

2. If the Contractor promptly makes payment of all sums due to Claimants, and defends, indemnifies, and holds harmless the Owner from claims, demands, liens, or suits by any person or entity seeking payment for labor, materials, or equipment furnished for use in the performance of the Construction Contract, then the Surety and the Contractor shall have no obligation under this Bond.

3. If there is no Owner Default under the Construction Contract, the Surety's obligation to the Owner under this Bond shall arise after the Owner has promptly notified the Contractor and the Surety (at the address described in Paragraph 13) of claims, demands, liens, or suits against the Owner or the Owner's property by any person or entity seeking payment for labor, materials, or equipment furnished for use in the performance of the Construction Contract, and tendered defense of such claims, demands, liens, or suits to the Contractor and the Surety.

4. When the Owner has satisfied the conditions in Paragraph 3, the Surety shall promptly and at the Surety's expense defend, indemnify, and hold harmless the Owner against a duly tendered claim, demand, lien, or suit.

5. The Surety's obligations to a Claimant under this Bond shall arise after the following:

   5.1 Claimants who do not have a direct contract with the Contractor,

      5.1.1 have furnished a written notice of non-payment to the Contractor, stating with substantial accuracy the amount claimed and the name of the party to whom the materials were, or equipment was, furnished or supplied or for whom the labor was done or performed, within ninety (90) days after having last performed labor or last furnished materials or equipment included in the Claim; and

      5.1.2 have sent a Claim to the Surety (at the address described in Paragraph 13).

   5.2 Claimants who are employed by or have a direct contract with the Contractor have sent a Claim to the Surety (at the address described in Paragraph 13).

6. If a notice of non-payment required by Paragraph 5.1.1 is given by the Owner to the Contractor, that is sufficient to satisfy a Claimant's obligation to furnish a written notice of non-payment under Paragraph 5.1.1.

7. When a Claimant has satisfied the conditions of Paragraph 5.1 or 5.2, whichever is applicable, the Surety shall promptly and at the Surety's expense take the following actions:

   7.1 Send an answer to the Claimant, with a copy to the Owner, within sixty (60) days after receipt of the Claim, stating the amounts that are undisputed and the basis for challenging any amounts that are disputed; and

   7.2 Pay or arrange for payment of any undisputed amounts.

   7.3 The Surety's failure to discharge its obligations under Paragraph 7.1 or 7.2 shall not be deemed to constitute a waiver of defenses the Surety or Contractor may have or acquire as to a Claim, except as to undisputed amounts for which the Surety and Claimant have reached agreement. If, however, the Surety fails to discharge its obligations under Paragraph 7.1 or 7.2, the Surety shall indemnify the Claimant for the reasonable attorney's fees the Claimant incurs thereafter to recover any sums found to be due and owing to the Claimant.

8. The Surety's total obligation shall not exceed the amount of this Bond, plus the amount of reasonable attorney's fees provided under Paragraph 7.3, and the amount of this Bond shall be credited for any payments made in good faith by the Surety.

9. Amounts owed by the Owner to the Contractor under the Construction Contract shall be used for the performance of the Construction Contract and to satisfy claims, if any, under any construction performance bond. By the Contractor furnishing and the Owner accepting this Bond, they agree that all funds earned by the Contractor in the performance of the Construction Contract are dedicated to satisfy obligations of the Contractor and Surety under this Bond, subject to the Owner's priority to use the funds for the completion of the work.

10. The Surety shall not be liable to the Owner, Claimants, or others for obligations of the Contractor that are unrelated to the Construction Contract. The Owner shall not be liable for the payment of any costs or expenses of any Claimant under this Bond, and shall have under this Bond no obligation to make payments to or give notice on behalf of Claimants, or otherwise have any obligations to Claimants under this Bond.

11. The Surety hereby waives notice of any change, including changes of time, to the Construction Contract or to related subcontracts, purchase orders, and other obligations.

Copyright © 2013 National Society of Professional Engineers, American Council of Engineering Companies, and American Society of Civil Engineers. All rights reserved.

12. No suit or action shall be commenced by a Claimant under this Bond other than in a court of competent jurisdiction in the state in which the project that is the subject of the Construction Contract is located or after the expiration of one year from the date (1) on which the Claimant sent a Claim to the Surety pursuant to Paragraph 5.1.2 or 5.2, or (2) on which the last labor or service was performed by anyone or the last materials or equipment were furnished by anyone under the Construction Contract, whichever of (1) or (2) first occurs. If the provisions of this paragraph are void or prohibited by law, the minimum period of limitation available to sureties as a defense in the jurisdiction of the suit shall be applicable.

13. Notice and Claims to the Surety, the Owner, or the Contractor shall be mailed or delivered to the address shown on the page on which their signature appears. Actual receipt of notice or Claims, however accomplished, shall be sufficient compliance as of the date received.

14. When this Bond has been furnished to comply with a statutory or other legal requirement in the location where the construction was to be performed, any provision in this Bond conflicting with said statutory or legal requirement shall be deemed deleted herefrom and provisions conforming to such statutory or other legal requirement shall be deemed incorporated herein. When so furnished, the intent is that this Bond shall be construed as a statutory bond and not as a common law bond.

15. Upon requests by any person or entity appearing to be a potential beneficiary of this Bond, the Contractor and Owner shall promptly furnish a copy of this Bond or shall permit a copy to be made.

16. **Definitions**

16.1 **Claim:** A written statement by the Claimant including at a minimum:

1. The name of the Claimant;
2. The name of the person for whom the labor was done, or materials or equipment furnished;
3. A copy of the agreement or purchase order pursuant to which labor, materials, or equipment was furnished for use in the performance of the Construction Contract;
4. A brief description of the labor, materials, or equipment furnished;
5. The date on which the Claimant last performed labor or last furnished materials or equipment for use in the performance of the Construction Contract;
6. The total amount earned by the Claimant for labor, materials, or equipment furnished as of the date of the Claim;
7. The total amount of previous payments received by the Claimant; and
8. The total amount due and unpaid to the Claimant for labor, materials, or equipment furnished as of the date of the Claim.

16.2 **Claimant:** An individual or entity having a direct contract with the Contractor or with a subcontractor of the Contractor to furnish labor, materials, or equipment for use in the performance of the Construction Contract. The term Claimant also includes any individual or entity that has rightfully asserted a claim under an applicable mechanic's lien or similar statute against the real property upon which the Project is located. The intent of this Bond shall be to include without limitation in the terms of "labor, materials, or equipment" that part of the water, gas, power, light, heat, oil, gasoline, telephone service, or rental equipment used in the Construction Contract, architectural and engineering services required for performance of the work of the Contractor and the Contractor's subcontractors, and all other items for which a mechanic's lien may be asserted in the jurisdiction where the labor, materials, or equipment were furnished.

16.3 **Construction Contract:** The agreement between the Owner and Contractor identified on the cover page, including all Contract Documents and all changes made to the agreement and the Contract Documents.

16.4 **Owner Default**: Failure of the Owner, which has not been remedied or waived, to pay the Contractor as required under the Construction Contract or to perform and complete or comply with the other material terms of the Construction Contract.

16.5 **Contract Documents:** All the documents that comprise the agreement between the Owner and Contractor.

17. If this Bond is issued for an agreement between a contractor and subcontractor, the term Contractor in this Bond shall be deemed to be Subcontractor and the term Owner shall be deemed to be Contractor.

18. Modifications to this Bond are as follows:

Copyright © 2013 National Society of Professional Engineers, American Council of Engineering Companies, and American Society of Civil Engineers. All rights reserved.

This document has important legal consequences; consultation with an attorney is encouraged with respect to its use or modification. This document should be adapted to the particular circumstances of the contemplated Project and the controlling Laws and Regulations.

STANDARD GENERAL CONDITIONS OF THE CONSTRUCTION CONTRACT
Section 00 72 13

Prepared by

EJCDC®
ENGINEERS JOINT CONTRACT DOCUMENTS COMMITTEE

Issued and Published Jointly by

ACEC
AMERICAN COUNCIL OF ENGINEERING COMPANIES

ASCE
AMERICAN SOCIETY OF CIVIL ENGINEERS

National Society of Professional Engineers®

EJCDC® C-700, Standard General Conditions of the Construction Contract.
Copyright © 2013 National Society of Professional Engineers, American Council of Engineering Companies, and American Society of Civil Engineers. All rights reserved.

These General Conditions have been prepared for use with the Agreement Between Owner and Contractor for Construction Contract (EJCDC® C-520, Stipulated Sum, or C-525, Cost-Plus, 2013 Editions). Their provisions are interrelated and a change in one may necessitate a change in the other.

To prepare supplementary conditions that are coordinated with the General Conditions, use EJCDC's Guide to the Preparation of Supplementary Conditions (EJCDC® C-800, 2013 Edition). The full EJCDC Construction series of documents is discussed in the Commentary on the 2013 EJCDC Construction Documents (EJCDC® C-001, 2013 Edition).

Copyright © 2013:

National Society of Professional Engineers

1420 King Street, Alexandria, VA 22314-2794

(703) 684-2882

www.nspe.org

American Council of Engineering Companies

1015 15th Street N.W., Washington, DC 20005

(202) 347-7474

www.acec.org

American Society of Civil Engineers

1801 Alexander Bell Drive, Reston, VA 20191-4400

(800) 548-2723

www.asce.org

The copyright for this document is owned jointly by the three sponsoring organizations listed above. The National Society of Professional Engineers is the Copyright Administrator for the EJCDC documents; please direct all inquiries regarding EJCDC copyrights to NSPE.

NOTE: EJCDC publications may be purchased at www.ejcdc.org, or from any of the sponsoring organizations above.

Copyright © 2013 National Society of Professional Engineers, American Council of Engineering Companies, and American Society of Civil Engineers. All rights reserved.

STANDARD GENERAL CONDITIONS OF THE CONSTRUCTION CONTRACT

TABLE OF CONTENTS

Page

Article 1 – Definitions and Terminology 1

1.01 Defined Terms 1

1.02 Terminology 5

Article 2 – Preliminary Matters 6

2.01 Delivery of Bonds and Evidence of Insurance 6

2.02 Copies of Documents 6

2.03 Before Starting Construction 6

2.04 Preconstruction Conference; Designation of Authorized Representatives 7

2.05 Initial Acceptance of Schedules 7

2.06 Electronic Transmittals 8

Article 3 – Documents: Intent, Requirements, Reuse 8

3.01 Intent 8

3.02 Reference Standards 8

3.03 Reporting and Resolving Discrepancies 9

3.04 Requirements of the Contract Documents 10

3.05 Reuse of Documents 10

Article 4 – Commencement and Progress of the Work 10

4.01 Commencement of Contract Times; Notice to Proceed 10

4.02 Starting the Work 11

4.03 Reference Points 11

4.04 Progress Schedule 11

4.05 Delays in Contractor's Progress 11

Article 5 – Availability of Lands; Subsurface and Physical Conditions; Hazardous Environmental Conditions 12

5.01 Availability of Lands 12

5.02 Use of Site and Other Areas 13

5.03 Subsurface and Physical Conditions 14

5.04 Differing Subsurface or Physical Conditions 14

5.05 Underground Facilities 16

Copyright © 2013 National Society of Professional Engineers, American Council of Engineering Companies, and American Society of Civil Engineers. All rights reserved.

5.06 Hazardous Environmental Conditions at Site 18
Article 6 – Bonds and Insurance 20
6.01 Performance, Payment, and Other Bonds 20
6.02 Insurance—General Provisions 20
6.03 Contractor's Insurance 21
6.04 Owner's Liability Insurance 24
6.05 Property Insurance 24
6.06 Waiver of Rights 26
6.07 Receipt and Application of Property Insurance Proceeds 26
Article 7 – Contractor's Responsibilities 27
7.01 Supervision and Superintendence 27
7.02 Labor; Working Hours 27
7.03 Services, Materials, and Equipment 27
7.04 "Or Equals" 28
7.05 Substitutes 29
7.06 Concerning Subcontractors, Suppliers, and Others 30
7.07 Patent Fees and Royalties 32
7.08 Permits 32
7.09 Taxes 33
7.10 Laws and Regulations 33
7.11 Record Documents 33
7.12 Safety and Protection 33
7.13 Safety Representative 35
7.14 Hazard Communication Programs 35
7.15 Emergencies 35
7.16 Shop Drawings, Samples, and Other Submittals 36
7.17 Contractor's General Warranty and Guarantee 38
7.18 Indemnification 38
7.19 Delegation of Professional Design Services 39
Article 8 – Other Work at the Site 40
8.01 Other Work 40
8.02 Coordination 40
8.03 Legal Relationships 41

Copyright © 2013 National Society of Professional Engineers, American Council of Engineering Companies, and American Society of Civil Engineers. All rights reserved.

Article 9 – Owner's Responsibilities 42
9.01 Communications to Contractor 42
9.02 Replacement of Engineer 42
9.03 Furnish Data 42
9.04 Pay When Due 42
9.05 Lands and Easements; Reports, Tests, and Drawings 42
9.06 Insurance 42
9.07 Change Orders 42
9.08 Inspections, Tests, and Approvals 42
9.09 Limitations on Owner's Responsibilities 42
9.10 Undisclosed Hazardous Environmental Condition 43
9.11 Evidence of Financial Arrangements 43
9.12 Safety Programs 43
Article 10 – Engineer's Status During Construction 43
10.01 Owner's Representative 43
10.02 Visits to Site 43
10.03 Project Representative 44
10.04 Rejecting Defective Work 44
10.05 Shop Drawings, Change Orders and Payments 44
10.06 Determinations for Unit Price Work 44
10.07 Decisions on Requirements of Contract Documents and Acceptability of Work 44
10.08 Limitations on Engineer's Authority and Responsibilities 44
10.09 Compliance with Safety Program 45
Article 11 – Amending the Contract Documents; Changes in the Work 45
11.01 Amending and Supplementing Contract Documents 45
11.02 Owner-Authorized Changes in the Work 46
11.03 Unauthorized Changes in the Work 46
11.04 Change of Contract Price 46
11.05 Change of Contract Times 47
11.06 Change Proposals 47
11.07 Execution of Change Orders 48
11.08 Notification to Surety 48
Article 12 – Claims 49

Copyright © 2013 National Society of Professional Engineers, American Council of Engineering Companies, and American Society of Civil Engineers. All rights reserved.

12.01 Claims 49
Article 13 – Cost of the Work; Allowances; Unit Price Work 50
13.01 Cost of the Work 50
13.02 Allowances 53
13.03 Unit Price Work 53
Article 14 – Tests and Inspections; Correction, Removal or Acceptance of Defective Work 54
14.01 Access to Work 54
14.02 Tests, Inspections, and Approvals 54
14.03 Defective Work 55
14.04 Acceptance of Defective Work 55
14.05 Uncovering Work 56
14.06 Owner May Stop the Work 56
14.07 Owner May Correct Defective Work 56
Article 15 – Payments to Contractor; Set-Offs; Completion; Correction Period 57
15.01 Progress Payments 57
15.02 Contractor's Warranty of Title 61
15.03 Substantial Completion 61
15.04 Partial Use or Occupancy 62
15.05 Final Inspection 62
15.06 Final Payment 62
15.07 Waiver of Claims 63
15.08 Correction Period 64
Article 16 – Suspension of Work and Termination 65
16.01 Owner May Suspend Work 65
16.02 Owner May Terminate for Cause 65
16.03 Owner May Terminate For Convenience 66
16.04 Contractor May Stop Work or Terminate 66
Article 17 – Final Resolution of Disputes 67
17.01 Methods and Procedures 67
Article 18 – Miscellaneous 67
18.01 Giving Notice 67
18.02 Computation of Times 67
18.03 Cumulative Remedies 67

Copyright © 2013 National Society of Professional Engineers, American Council of Engineering Companies, and American Society of Civil Engineers. All rights reserved.

18.04 Limitation of Damages 68
18.05 No Waiver 68
18.06 Survival of Obligations 68
18.07 Controlling Law 68
18.08 Headings 68

Copyright © 2013 National Society of Professional Engineers, American Council of Engineering Companies, and American Society of Civil Engineers. All rights reserved.

ARTICLE 1 – DEFINITIONS AND TERMINOLOGY

1.01 *Defined Terms*

A. Wherever used in the Bidding Requirements or Contract Documents, a term printed with initial capital letters, including the term's singular and plural forms, will have the meaning indicated in the definitions below. In addition to terms specifically defined, terms with initial capital letters in the Contract Documents include references to identified articles and paragraphs, and the titles of other documents or forms.

1. *Addenda*—Written or graphic instruments issued prior to the opening of Bids which clarify, correct, or change the Bidding Requirements or the proposed Contract Documents.

2. *Agreement*—The written instrument, executed by Owner and Contractor, that sets forth the Contract Price and Contract Times, identifies the parties and the Engineer, and designates the specific items that are Contract Documents.

3. *Application for Payment*—The form acceptable to Engineer which is to be used by Contractor during the course of the Work in requesting progress or final payments and which is to be accompanied by such supporting documentation as is required by the Contract Documents.

4. *Bid*—The offer of a Bidder submitted on the prescribed form setting forth the prices for the Work to be performed.

5. *Bidder*—An individual or entity that submits a Bid to Owner.

6. *Bidding Documents*—The Bidding Requirements, the proposed Contract Documents, and all Addenda.

7. *Bidding Requirements*—The advertisement or invitation to bid, Instructions to Bidders, Bid Bond or other Bid security, if any, the Bid Form, and the Bid with any attachments.

8. *Change Order*—A document which is signed by Contractor and Owner and authorizes an addition, deletion, or revision in the Work or an adjustment in the Contract Price or the Contract Times, or other revision to the Contract, issued on or after the Effective Date of the Contract.

9. *Change Proposal*—A written request by Contractor, duly submitted in compliance with the procedural requirements set forth herein, seeking an adjustment in Contract Price or Contract Times, or both; contesting an initial decision by Engineer concerning the requirements of the Contract Documents or the acceptability of Work under the Contract Documents; challenging a set-off against payments due; or seeking other relief with respect to the terms of the Contract.

10. *Claim*—(a) A demand or assertion by Owner directly to Contractor, duly submitted in compliance with the procedural requirements set forth herein: seeking an adjustment of Contract Price or Contract Times, or both; contesting an initial decision by Engineer concerning the requirements of the Contract Documents or the acceptability of Work under the Contract Documents; contesting Engineer's decision regarding a Change Proposal; seeking resolution of a contractual issue that Engineer has declined to address; or seeking other relief with respect to the terms of the Contract; or (b) a demand or assertion by Contractor directly to Owner, duly submitted in compliance with the procedural requirements set forth herein, contesting Engineer's decision regarding a Change Proposal; or seeking resolution of a contractual issue that Engineer

Copyright © 2013 National Society of Professional Engineers, American Council of Engineering Companies, and American Society of Civil Engineers. All rights reserved.

has declined to address. A demand for money or services by a third party is not a Claim.

11. *Constituent of Concern*—Asbestos, petroleum, radioactive materials, polychlorinated biphenyls (PCBs), hazardous waste, and any substance, product, waste, or other material of any nature whatsoever that is or becomes listed, regulated, or addressed pursuant to (a) the Comprehensive Environmental Response, Compensation and Liability Act, 42 U.S.C. §§9601 et seq. ("CERCLA"); (b) the Hazardous Materials Transportation Act, 49 U.S.C. §§5501 et seq.; (c) the Resource Conservation and Recovery Act, 42 U.S.C. §§6901 et seq. ("RCRA"); (d) the Toxic Substances Control Act, 15 U.S.C. §§2601 et seq.; (e) the Clean Water Act, 33 U.S.C. §§1251 et seq.; (f) the Clean Air Act, 42 U.S.C. §§7401 et seq.; or (g) any other federal, state, or local statute, law, rule, regulation, ordinance, resolution, code, order, or decree regulating, relating to, or imposing liability or standards of conduct concerning, any hazardous, toxic, or dangerous waste, substance, or material.

12. *Contract*—The entire and integrated written contract between the Owner and Contractor concerning the Work.

13. *Contract Documents*—Those items so designated in the Agreement, and which together comprise the Contract.

14. *Contract Price*—The money that Owner has agreed to pay Contractor for completion of the Work in accordance with the Contract Documents. .

15. *Contract Times*—The number of days or the dates by which Contractor shall: (a) achieve Milestones, if any; (b) achieve Substantial Completion; and (c) complete the Work.

16. *Contractor*—The individual or entity with which Owner has contracted for performance of the Work.

17. *Cost of the Work*—See Paragraph 13.01 for definition.

18. *Drawings*—The part of the Contract that graphically shows the scope, extent, and character of the Work to be performed by Contractor.

19. *Effective Date of the Contract*—The date, indicated in the Agreement, on which the Contract becomes effective.

20. *Engineer*—The individual or entity named as such in the Agreement.

21. *Field Order*—A written order issued by Engineer which requires minor changes in the Work but does not change the Contract Price or the Contract Times.

22. *Hazardous Environmental Condition*—The presence at the Site of Constituents of Concern in such quantities or circumstances that may present a danger to persons or property exposed thereto. The presence at the Site of materials that are necessary for the execution of the Work, or that are to be incorporated in the Work, and that are controlled and contained pursuant to industry practices, Laws and Regulations, and the requirements of the Contract, does not establish a Hazardous Environmental Condition.

23. *Laws and Regulations; Laws or Regulations*—Any and all applicable laws, statutes, rules, regulations, ordinances, codes, and orders of any and all governmental bodies, agencies, authorities, and courts having jurisdiction.

Copyright © 2013 National Society of Professional Engineers, American Council of Engineering Companies, and American Society of Civil Engineers. All rights reserved.

24. *Liens*—Charges, security interests, or encumbrances upon Contract-related funds, real property, or personal property.

25. *Milestone*—A principal event in the performance of the Work that the Contract requires Contractor to achieve by an intermediate completion date or by a time prior to Substantial Completion of all the Work.

26. *Notice of Award*—The written notice by Owner to a Bidder of Owner's acceptance of the Bid.

27. *Notice to Proceed*—A written notice by Owner to Contractor fixing the date on which the Contract Times will commence to run and on which Contractor shall start to perform the Work.

28. *Owner*—The individual or entity with which Contractor has contracted regarding the Work, and which has agreed to pay Contractor for the performance of the Work, pursuant to the terms of the Contract.

29. *Progress Schedule*—A schedule, prepared and maintained by Contractor, describing the sequence and duration of the activities comprising the Contractor's plan to accomplish the Work within the Contract Times.

30. *Project*—The total undertaking to be accomplished for Owner by engineers, contractors, and others, including planning, study, design, construction, testing, commissioning, and start-up, and of which the Work to be performed under the Contract Documents is a part.

31. *Project Manual*—The written documents prepared for, or made available for, procuring and constructing the Work, including but not limited to the Bidding Documents or other construction procurement documents, geotechnical and existing conditions information, the Agreement, bond forms, General Conditions, Supplementary Conditions, and Specifications. The contents of the Project Manual may be bound in one or more volumes.

32. *Resident Project Representative*—The authorized representative of Engineer assigned to assist Engineer at the Site. As used herein, the term Resident Project Representative or "RPR" includes any assistants or field staff of Resident Project Representative.

33. *Samples*—Physical examples of materials, equipment, or workmanship that are representative of some portion of the Work and that establish the standards by which such portion of the Work will be judged.

34. *Schedule of Submittals*—A schedule, prepared and maintained by Contractor, of required submittals and the time requirements for Engineer's review of the submittals and the performance of related construction activities.

35. *Schedule of Values*—A schedule, prepared and maintained by Contractor, allocating portions of the Contract Price to various portions of the Work and used as the basis for reviewing Contractor's Applications for Payment.

36. *Shop Drawings*—All drawings, diagrams, illustrations, schedules, and other data or information that are specifically prepared or assembled by or for Contractor and submitted by Contractor to illustrate some portion of the Work. Shop Drawings, whether approved or not, are not Drawings and are not Contract Documents.

Copyright © 2013 National Society of Professional Engineers, American Council of Engineering Companies, and American Society of Civil Engineers. All rights reserved.

37. *Site*—Lands or areas indicated in the Contract Documents as being furnished by Owner upon which the Work is to be performed, including rights-of-way and easements, and such other lands furnished by Owner which are designated for the use of Contractor.

38. *Specifications*—The part of the Contract that consists of written requirements for materials, equipment, systems, standards, and workmanship as applied to the Work, and certain administrative requirements and procedural matters applicable to the Work.

39. *Subcontractor*—An individual or entity having a direct contract with Contractor or with any other Subcontractor for the performance of a part of the Work.

40. *Substantial Completion*—The time at which the Work (or a specified part thereof) has progressed to the point where, in the opinion of Engineer, the Work (or a specified part thereof) is sufficiently complete, in accordance with the Contract Documents, so that the Work (or a specified part thereof) can be utilized for the purposes for which it is intended. The terms "substantially complete" and "substantially completed" as applied to all or part of the Work refer to Substantial Completion thereof.

41. *Successful Bidder*—The Bidder whose Bid the Owner accepts, and to which the Owner makes an award of contract, subject to stated conditions.

42. *Supplementary Conditions*—The part of the Contract that amends or supplements these General Conditions.

43. *Supplier*—A manufacturer, fabricator, supplier, distributor, materialman, or vendor having a direct contract with Contractor or with any Subcontractor to furnish materials or equipment to be incorporated in the Work by Contractor or a Subcontractor.

44. *Technical Data*—Those items expressly identified as Technical Data in the Supplementary Conditions, with respect to either (a) subsurface conditions at the Site, or physical conditions relating to existing surface or subsurface structures at the Site (except Underground Facilities) or (b) Hazardous Environmental Conditions at the Site. If no such express identifications of Technical Data have been made with respect to conditions at the Site, then the data contained in boring logs, recorded measurements of subsurface water levels, laboratory test results, and other factual, objective information regarding conditions at the Site that are set forth in any geotechnical or environmental report prepared for the Project and made available to Contractor are hereby defined as Technical Data with respect to conditions at the Site under Paragraphs 5.03, 5.04, and 5.06.

45. *Underground Facilities*—All underground pipelines, conduits, ducts, cables, wires, manholes, vaults, tanks, tunnels, or other such facilities or attachments, and any encasements containing such facilities, including but not limited to those that convey electricity, gases, steam, liquid petroleum products, telephone or other communications, fiber optic transmissions, cable television, water, wastewater, storm water, other liquids or chemicals, or traffic or other control systems.

46. *Unit Price Work*—Work to be paid for on the basis of unit prices.

47. *Work*—The entire construction or the various separately identifiable parts thereof required to be provided under the Contract Documents. Work includes and is the result of performing or providing all labor, services, and documentation necessary to produce such construction; furnishing, installing, and incorporating all materials and equipment into such construction; and may include related services such as testing, start-up, and commissioning, all as required by the Contract Documents.

Copyright © 2013 National Society of Professional Engineers, American Council of Engineering Companies, and American Society of Civil Engineers. All rights reserved.

48. *Work Change Directive*—A written directive to Contractor issued on or after the Effective Date of the Contract, signed by Owner and recommended by Engineer, ordering an addition, deletion, or revision in the Work. **A Work Change Directive cannot change Contract Price or Contract Times without a subsequent Change Order.**

1.02 *Terminology*

A. The words and terms discussed in the following paragraphs are not defined but, when used in the Bidding Requirements or Contract Documents, have the indicated meaning.

B. *Intent of Certain Terms or Adjectives*:

1. The Contract Documents include the terms "as allowed," "as approved," "as ordered," "as directed" or terms of like effect or import to authorize an exercise of professional judgment by Engineer. In addition, the adjectives "reasonable," "suitable," "acceptable," "proper," "satisfactory," or adjectives of like effect or import are used to describe an action or determination of Engineer as to the Work. It is intended that such exercise of professional judgment, action, or determination will be solely to evaluate, in general, the Work for compliance with the information in the Contract Documents and with the design concept of the Project as a functioning whole as shown or indicated in the Contract Documents (unless there is a specific statement indicating otherwise). The use of any such term or adjective is not intended to and shall not be effective to assign to Engineer any duty or authority to supervise or direct the performance of the Work, or any duty or authority to undertake responsibility contrary to the provisions of Article 10 or any other provision of the Contract Documents.

C. *Day*:

1. The word "day" means a calendar day of 24 hours measured from midnight to the next midnight.

D. *Defective*:

1. The word "defective," when modifying the word "Work," refers to Work that is unsatisfactory, faulty, or deficient in that it:

a. does not conform to the Contract Documents; or

b. does not meet the requirements of any applicable inspection, reference standard, test, or approval referred to in the Contract Documents; or

c. has been damaged prior to Engineer's recommendation of final payment (unless responsibility for the protection thereof has been assumed by Owner at Substantial Completion in accordance with Paragraph 15.03 or 15.04).

E. *Furnish, Install, Perform, Provide*:

1. The word "furnish," when used in connection with services, materials, or equipment, shall mean to supply and deliver said services, materials, or equipment to the Site (or some other specified location) ready for use or installation and in usable or operable condition.

2. The word "install," when used in connection with services, materials, or equipment, shall mean to put into use or place in final position said services, materials, or equipment complete and ready for intended use.

Copyright © 2013 National Society of Professional Engineers, American Council of Engineering Companies, and American Society of Civil Engineers. All rights reserved.

3. The words "perform" or "provide," when used in connection with services, materials, or equipment, shall mean to furnish and install said services, materials, or equipment complete and ready for intended use.

4. If the Contract Documents establish an obligation of Contractor with respect to specific services, materials, or equipment, but do not expressly use any of the four words "furnish," "install," "perform," or "provide," then Contractor shall furnish and install said services, materials, or equipment complete and ready for intended use.

F. Unless stated otherwise in the Contract Documents, words or phrases that have a well-known technical or construction industry or trade meaning are used in the Contract Documents in accordance with such recognized meaning.

ARTICLE 2 – PRELIMINARY MATTERS

2.01 *Delivery of Bonds and Evidence of Insurance*

A. *Bonds*: When Contractor delivers the executed counterparts of the Agreement to Owner, Contractor shall also deliver to Owner such bonds as Contractor may be required to furnish.

B. *Evidence of Contractor's Insurance*: When Contractor delivers the executed counterparts of the Agreement to Owner, Contractor shall also deliver to Owner, with copies to each named insured and additional insured (as identified in the Supplementary Conditions or elsewhere in the Contract), the certificates and other evidence of insurance required to be provided by Contractor in accordance with Article 6.

C. *Evidence of Owner's Insurance*: After receipt of the executed counterparts of the Agreement and all required bonds and insurance documentation, Owner shall promptly deliver to Contractor, with copies to each named insured and additional insured (as identified in the Supplementary Conditions or otherwise), the certificates and other evidence of insurance required to be provided by Owner under Article 6.

D. **Contractor shall use forms EJCDC No. C-610 and C-615 (2013 ed.) for the Labor and Material Payment Bond and Performance Bond. Each bond shall be in the amount of 100 percent of the contract amount. City of Bethel shall be named as co-obligee or a separate Warranty Bond shall be provided to them upon completion of the work.**

2.02 *Copies of Documents*

A. Owner shall furnish to Contractor four **(4)** printed copies of the Contract (including one fully executed counterpart of the Agreement), and one copy in electronic portable document format (PDF). Additional printed copies will be furnished upon request at the cost of reproduction.

B. Owner shall maintain and safeguard at least one original printed record version of the Contract, including Drawings and Specifications signed and sealed by Engineer and other design professionals. Owner shall make such original printed record version of the Contract available to Contractor for review. Owner may delegate the responsibilities under this provision to Engineer.

2.03 *Before Starting Construction*

A. *Preliminary Schedules*: Within 10 days after the Effective Date of the Contract (or as otherwise specifically required by the Contract Documents), Contractor shall submit to Engineer for timely review:

Copyright © 2013 National Society of Professional Engineers, American Council of Engineering Companies, and American Society of Civil Engineers. All rights reserved.

1. a preliminary Progress Schedule indicating the times (numbers of days or dates) for starting and completing the various stages of the Work, including any Milestones specified in the Contract;

2. a preliminary Schedule of Submittals; and

3. a preliminary Schedule of Values for all of the Work which includes quantities and prices of items which when added together equal the Contract Price and subdivides the Work into component parts in sufficient detail to serve as the basis for progress payments during performance of the Work. Such prices will include an appropriate amount of overhead and profit applicable to each item of Work.

4. **Contractor shall submit a preliminary list of construction equipment with hourly rates, owned or rented by the Contractor and all Subcontractors that will be used in the performance of the Work. The equipment list will include information necessary to confirm the hourly rates per Paragraph 13.01.B.5.c of these General Conditions including: make, model, and year of manufacture as well as horse power, capacity or weight and accessories.**

2.04 *Preconstruction Conference; Designation of Authorized Representatives*

A. Before any Work at the Site is started, a conference attended by Owner, Contractor, Engineer, and others as appropriate will be held to establish a working understanding among the parties as to the Work and to discuss the schedules referred to in Paragraph 2.03.A, procedures for handling Shop Drawings, Samples, and other submittals, processing Applications for Payment, electronic or digital transmittals, and maintaining required records.

B. At this conference Owner and Contractor each shall designate, in writing, a specific individual to act as its authorized representative with respect to the services and responsibilities under the Contract. Such individuals shall have the authority to transmit and receive information, render decisions relative to the Contract, and otherwise act on behalf of each respective party.

C. **A preconstruction conference will be held in Bethel and will be coordinated with the Contractor after bid opening.**

2.05 *Initial Acceptance of Schedules*

~~A.~~ **Prior to the first application for payment all schedules and documents identified in paragraph 2.03 shall be finalized and acceptable to Owner and Engineer. No progress payment shall be made to Contractor until acceptable schedules are submitted to Engineer and Owner as provided below. Acceptance of these schedules and documents by either Engineer or Owner will neither impose on Engineer or Owner responsibility for sequencing, scheduling or progress of the Work and will not interfere with or relieve Contractor from Contractor's full responsibility therefore.** ~~At least 10 days before submission of the first Application for Payment a conference, attended by Contractor, Engineer, and others as appropriate, will be held to review for acceptability to Engineer as provided below the schedules submitted in accordance with Paragraph 2.03.A. Contractor shall have an additional 10 days to make corrections and adjustments and to complete and resubmit the schedules. No progress payment shall be made to Contractor until acceptable schedules are submitted to Engineer.~~

1. The Progress Schedule will be acceptable to Engineer if it provides an orderly progression of the Work to completion within the Contract Times. Such acceptance will not impose on Engineer responsibility for the Progress Schedule, for sequencing,

Copyright © 2013 National Society of Professional Engineers, American Council of Engineering Companies, and American Society of Civil Engineers. All rights reserved.

scheduling, or progress of the Work, nor interfere with or relieve Contractor from Contractor's full responsibility therefor.

2. Contractor's Schedule of Submittals will be acceptable to Engineer if it provides a workable arrangement for reviewing and processing the required submittals.

3. Contractor's Schedule of Values will be acceptable to Engineer as to form and substance if it provides a reasonable allocation of the Contract Price to the component parts of the Work.

4. **Contractor's Schedule of Equipment will be acceptable to Engineer as to form and substance if it provides the necessary information to reference the equipment and establish the hourly rates in accordance with paragraph 13.01.B.5.c**.

2.06 *Electronic Transmittals*

A. Except as otherwise stated elsewhere in the Contract, the Owner, Engineer, and Contractor may transmit, and shall accept, Project-related correspondence, text, data, documents, drawings, information, and graphics, including but not limited to Shop Drawings and other submittals, in electronic media or digital format, either directly, or through access to a secure Project website.

B. If the Contract does not establish protocols for electronic or digital transmittals, then Owner, Engineer, and Contractor shall jointly develop such protocols.

C. When transmitting items in electronic media or digital format, the transmitting party makes no representations as to long term compatibility, usability, or readability of the items resulting from the recipient's use of software application packages, operating systems, or computer hardware differing from those used in the drafting or transmittal of the items, or from those established in applicable transmittal protocols.

ARTICLE 3 – DOCUMENTS: INTENT, REQUIREMENTS, REUSE

3.01 *Intent*

A. The Contract Documents are complementary; what is required by one is as binding as if required by all.

B. It is the intent of the Contract Documents to describe a functionally complete project (or part thereof) to be constructed in accordance with the Contract Documents.

C. Unless otherwise stated in the Contract Documents, if there is a discrepancy between the electronic or digital versions of the Contract Documents (including any printed copies derived from such electronic or digital versions) and the printed record version, the printed record version shall govern.

D. The Contract supersedes prior negotiations, representations, and agreements, whether written or oral.

E. Engineer will issue clarifications and interpretations of the Contract Documents as provided herein.

3.02 *Reference Standards*

A. Standards Specifications, Codes, Laws and Regulations

1. Reference in the Contract Documents to standard specifications, manuals, reference standards, or codes of any technical society, organization, or association, or to Laws or Regulations, whether such reference be specific or by implication, shall mean the

Copyright © 2013 National Society of Professional Engineers, American Council of Engineering Companies, and American Society of Civil Engineers. All rights reserved.

standard specification, manual, reference standard, code, or Laws or Regulations in effect at the time of opening of Bids (or on the Effective Date of the Contract if there were no Bids), except as may be otherwise specifically stated in the Contract Documents.

2. No provision of any such standard specification, manual, reference standard, or code, or any instruction of a Supplier, shall be effective to change the duties or responsibilities of Owner, Contractor, or Engineer, or any of their subcontractors, consultants, agents, or employees, from those set forth in the part of the Contract Documents prepared by or for Engineer. No such provision or instruction shall be effective to assign to Owner, Engineer, or any of their officers, directors, members, partners, employees, agents, consultants, or subcontractors, any duty or authority to supervise or direct the performance of the Work or any duty or authority to undertake responsibility inconsistent with the provisions of the part of the Contract Documents prepared by or for Engineer.

3.03 *Reporting and Resolving Discrepancies*

A. *Reporting Discrepancies*:

1. *Contractor's Verification of Figures and Field Measurements*: Before undertaking each part of the Work, Contractor shall carefully study the Contract Documents, and check and verify pertinent figures and dimensions therein, particularly with respect to applicable field measurements. Contractor shall promptly report in writing to Engineer any conflict, error, ambiguity, or discrepancy that Contractor discovers, or has actual knowledge of, and shall not proceed with any Work affected thereby until the conflict, error, ambiguity, or discrepancy is resolved, by a clarification or interpretation by Engineer, or by an amendment or supplement to the Contract Documents issued pursuant to Paragraph 11.01.

2. *Contractor's Review of Contract Documents*: If, before or during the performance of the Work, Contractor discovers any conflict, error, ambiguity, or discrepancy within the Contract Documents, or between the Contract Documents and (a) any applicable Law or Regulation, (b) actual field conditions, (c) any standard specification, manual, reference standard, or code, or (d) any instruction of any Supplier, then Contractor shall promptly report it to Engineer in writing. Contractor shall not proceed with the Work affected thereby (except in an emergency as required by Paragraph 7.15) until the conflict, error, ambiguity, or discrepancy is resolved, by a clarification or interpretation by Engineer, or by an amendment or supplement to the Contract Documents issued pursuant to Paragraph 11.01.

3. Contractor shall not be liable to Owner or Engineer for failure to report any conflict, error, ambiguity, or discrepancy in the Contract Documents unless Contractor had actual knowledge thereof.

B. *Resolving Discrepancies*:

1. Except as may be otherwise specifically stated in the Contract Documents, the provisions of the part of the Contract Documents prepared by or for Engineer shall take precedence in resolving any conflict, error, ambiguity, or discrepancy between such provisions of the Contract Documents and:

   a. the provisions of any standard specification, manual, reference standard, or code, or the instruction of any Supplier (whether or not specifically incorporated by reference as a Contract Document); or

Copyright © 2013 National Society of Professional Engineers, American Council of Engineering Companies, and American Society of Civil Engineers. All rights reserved.

b. the provisions of any Laws or Regulations applicable to the performance of the Work (unless such an interpretation of the provisions of the Contract Documents would result in violation of such Law or Regulation).

3.04 *Requirements of the Contract Documents*

A. During the performance of the Work and until final payment, Contractor and Owner shall submit to the Engineer all matters in question concerning the requirements of the Contract Documents (sometimes referred to as requests for information or interpretation—RFIs), or relating to the acceptability of the Work under the Contract Documents, as soon as possible after such matters arise. Engineer will be the initial interpreter of the requirements of the Contract Documents, and judge of the acceptability of the Work thereunder.

B. Engineer will, with reasonable promptness, render a written clarification, interpretation, or decision on the issue submitted, or initiate an amendment or supplement to the Contract Documents. Engineer's written clarification, interpretation, or decision will be final and binding on Contractor, unless it appeals by submitting a Change Proposal, and on Owner, unless it appeals by filing a Claim.

C. If a submitted matter in question concerns terms and conditions of the Contract Documents that do not involve (1) the performance or acceptability of the Work under the Contract Documents, (2) the design (as set forth in the Drawings, Specifications, or otherwise), or (3) other engineering or technical matters, then Engineer will promptly give written notice to Owner and Contractor that Engineer is unable to provide a decision or interpretation. If Owner and Contractor are unable to agree on resolution of such a matter in question, either party may pursue resolution as provided in Article 12.

3.05 *Reuse of Documents*

A. Contractor and its Subcontractors and Suppliers shall not:

1. have or acquire any title to or ownership rights in any of the Drawings, Specifications, or other documents (or copies of any thereof) prepared by or bearing the seal of Engineer or its consultants, including electronic media editions, or reuse any such Drawings, Specifications, other documents, or copies thereof on extensions of the Project or any other project without written consent of Owner and Engineer and specific written verification or adaptation by Engineer; or

2. have or acquire any title or ownership rights in any other Contract Documents, reuse any such Contract Documents for any purpose without Owner's express written consent, or violate any copyrights pertaining to such Contract Documents.

B. The prohibitions of this Paragraph 3.05 will survive final payment, or termination of the Contract. Nothing herein shall preclude Contractor from retaining copies of the Contract Documents for record purposes.

ARTICLE 4 – COMMENCEMENT AND PROGRESS OF THE WORK

4.01 *Commencement of Contract Times; Notice to Proceed*

A. The Contract Times will commence to run on the thirtieth day after the Effective Date of the Contract or, if a Notice to Proceed is given, on the day indicated in the Notice to Proceed. A Notice to Proceed may be given at any time within 30 days after the Effective Date of the Contract. In no event will the Contract Times commence to run later than the sixtieth day after the day of Bid opening or the thirtieth day after the Effective Date of the Contract, whichever date is earlier.

Copyright © 2013 National Society of Professional Engineers, American Council of Engineering Companies, and American Society of Civil Engineers. All rights reserved.

4.02 *Starting the Work*

A. Contractor shall start to perform the Work on the date when the Contract Times commence to run. No Work shall be done at the Site prior to such date.

4.03 *Reference Points*

A. Owner shall provide engineering surveys to establish reference points for construction which in Engineer's judgment are necessary to enable Contractor to proceed with the Work. Contractor shall be responsible for laying out the Work, shall protect and preserve the established reference points and property monuments, and shall make no changes or relocations without the prior written approval of Owner. Contractor shall report to Engineer whenever any reference point or property monument is lost or destroyed or requires relocation because of necessary changes in grades or locations, and shall be responsible for the accurate replacement or relocation of such reference points or property monuments by professionally qualified personnel.

4.04 *Progress Schedule*

A. Contractor shall adhere to the Progress Schedule established in accordance with Paragraph 2.05 as it may be adjusted from time to time as provided below.

1. Contractor shall submit to Engineer for acceptance (to the extent indicated in Paragraph 2.05) proposed adjustments in the Progress Schedule that will not result in changing the Contract Times.

2. Proposed adjustments in the Progress Schedule that will change the Contract Times shall be submitted in accordance with the requirements of Article 11.

B. Contractor shall carry on the Work and adhere to the Progress Schedule during all disputes or disagreements with Owner. No Work shall be delayed or postponed pending resolution of any disputes or disagreements, or during any appeal process, except as permitted by Paragraph 16.04, or as Owner and Contractor may otherwise agree in writing.

4.05 *Delays in Contractor's Progress*

A. If Owner, Engineer, or anyone for whom Owner is responsible, delays, disrupts, or interferes with the performance or progress of the Work, then Contractor shall be entitled to an equitable adjustment in the Contract Times and Contract Price. Contractor's entitlement to an adjustment of the Contract Times is conditioned on such adjustment being essential to Contractor's ability to complete the Work within the Contract Times.

B. Contractor shall not be entitled to an adjustment in Contract Price or Contract Times for delay, disruption, or interference caused by or within the control of Contractor. Delay, disruption, and interference attributable to and within the control of a Subcontractor or Supplier shall be deemed to be within the control of Contractor.

C. If Contractor's performance or progress is delayed, disrupted, or interfered with by unanticipated causes not the fault of and beyond the control of Owner, Contractor, and those for which they are responsible, then Contractor shall be entitled to an equitable adjustment in Contract Times. Contractor's entitlement to an adjustment of the Contract Times is conditioned on such adjustment being essential to Contractor's ability to complete the Work within the Contract Times. Such an adjustment shall be Contractor's sole and exclusive remedy for the delays, disruption, and interference described in this paragraph. Causes of delay, disruption, or interference that may give rise to an adjustment in Contract Times under this paragraph include but are not limited to the following:

Copyright © 2013 National Society of Professional Engineers, American Council of Engineering Companies, and American Society of Civil Engineers. All rights reserved.

1. severe and unavoidable natural catastrophes such as fires, floods, epidemics, and earthquakes;
2. abnormal weather conditions;
3. acts or failures to act of utility owners (other than those performing other work at or adjacent to the Site by arrangement with the Owner, as contemplated in Article 8); and
4. acts of war or terrorism.

D. Delays, disruption, and interference to the performance or progress of the Work resulting from the existence of a differing subsurface or physical condition, an Underground Facility that was not shown or indicated by the Contract Documents, or not shown or indicated with reasonable accuracy, and those resulting from Hazardous Environmental Conditions, are governed by Article 5.

E. Paragraph 8.03 governs delays, disruption, and interference to the performance or progress of the Work resulting from the performance of certain other work at or adjacent to the Site.

F. Contractor shall not be entitled to an adjustment in Contract Price or Contract Times for any delay, disruption, or interference if such delay is concurrent with a delay, disruption, or interference caused by or within the control of Contractor.

G. Contractor must submit any Change Proposal seeking an adjustment in Contract Price or Contract Times under this paragraph within 30 days of the commencement of the delaying, disrupting, or interfering event.

ARTICLE 5 – AVAILABILITY OF LANDS; SUBSURFACE AND PHYSICAL CONDITIONS; HAZARDOUS ENVIRONMENTAL CONDITIONS

5.01 *Availability of Lands*

A. Owner shall furnish the Site. Owner shall notify Contractor of any encumbrances or restrictions not of general application but specifically related to use of the Site with which Contractor must comply in performing the Work.

B. Upon reasonable written request, Owner shall furnish Contractor with a current statement of record legal title and legal description of the lands upon which permanent improvements are to be made and Owner's interest therein as necessary for giving notice of or filing a mechanic's or construction lien against such lands in accordance with applicable Laws and Regulations.

C. Contractor shall provide for all additional lands and access thereto that may be required for temporary construction facilities or storage of materials and equipment. **If it is necessary or desirable that the Contractor use land outside of the Owner's site, easement or right-of-way, the Contractor shall obtain consent from the property owner and tenant of the land. The Contractor shall not enter for material delivery, storage or occupy for any other purpose with men, tools, equipment, construction material, or with materials excavated from the site, any private property outside the designated limits of the construction site, easement boundaries, or right-of-way without written permission from the property owner and tenant.**

Copyright © 2013 National Society of Professional Engineers, American Council of Engineering Companies, and American Society of Civil Engineers. All rights reserved.

5.02 *Use of Site and Other Areas*

A. *Limitation on Use of Site and Other Areas*:

1. Contractor shall confine construction equipment, temporary construction facilities, the storage of materials and equipment, and the operations of workers to the Site, adjacent areas that Contractor has arranged to use through construction easements or otherwise, and other adjacent areas permitted by Laws and Regulations, and shall not unreasonably encumber the Site and such other adjacent areas with construction equipment or other materials or equipment. Contractor shall assume full responsibility for (a) damage to the Site; (b) damage to any such other adjacent areas used for Contractor's operations; (c) damage to any other adjacent land or areas; and (d) for injuries and losses sustained by the owners or occupants of any such land or areas; provided that such damage or injuries result from the performance of the Work or from other actions or conduct of the Contractor or those for which Contractor is responsible.

2. If a damage or injury claim is made by the owner or occupant of any such land or area because of the performance of the Work, or because of other actions or conduct of the Contractor or those for which Contractor is responsible, Contractor shall (a) take immediate corrective or remedial action as required by Paragraph 7.12, or otherwise; (b) promptly attempt to settle the claim as to all parties through negotiations with such owner or occupant, or otherwise resolve the claim by arbitration or other dispute resolution proceeding, or at law; and (c) to the fullest extent permitted by Laws and Regulations, indemnify and hold harmless Owner and Engineer, and the officers, directors, members, partners, employees, agents, consultants and subcontractors of each and any of them from and against any such claim, and against all costs, losses, and damages (including but not limited to all fees and charges of engineers, architects, attorneys, and other professionals and all court or arbitration or other dispute resolution costs) arising out of or relating to any claim or action, legal or equitable, brought by any such owner or occupant against Owner, Engineer, or any other party indemnified hereunder to the extent caused directly or indirectly, in whole or in part by, or based upon, Contractor's performance of the Work, or because of other actions or conduct of the Contractor or those for which Contractor is responsible.

B. *Removal of Debris During Performance of the Work*: During the progress of the Work the Contractor shall keep the Site and other adjacent areas free from accumulations of waste materials, rubbish, and other debris. Removal and disposal of such waste materials, rubbish, and other debris shall conform to applicable Laws and Regulations.

C. *Cleaning*: Prior to Substantial Completion of the Work Contractor shall clean the Site and the Work and make it ready for utilization by Owner. At the completion of the Work Contractor shall remove from the Site and adjacent areas all tools, appliances, construction equipment and machinery, and surplus materials and shall restore to original condition all property not designated for alteration by the Contract Documents.

D. *Loading of Structures*: Contractor shall not load nor permit any part of any structure to be loaded in any manner that will endanger the structure, nor shall Contractor subject any part of the Work or adjacent structures or land to stresses or pressures that will endanger them.

Copyright © 2013 National Society of Professional Engineers, American Council of Engineering Companies, and American Society of Civil Engineers. All rights reserved.

5.03 *Subsurface and Physical Conditions*

A. *Reports and Drawings*: The Supplementary Conditions identify:

1. those reports known to Owner of explorations and tests of subsurface conditions at or adjacent to the Site;

2. those drawings known to Owner of physical conditions relating to existing surface or subsurface structures at the Site (except Underground Facilities); and

3. Technical Data contained in such reports and drawings.

B. *Reliance by Contractor on Technical Data Authorized*: Contractor may rely upon the accuracy of the Technical Data expressly identified in the Supplementary Conditions with respect to such reports and drawings, but such reports and drawings are not Contract Documents. If no such express identification has been made, then Contractor may rely upon the accuracy of the Technical Data (as defined in Article 1) contained in any geotechnical or environmental report prepared for the Project and made available to Contractor. Except for such reliance on Technical Data, Contractor may not rely upon or make any claim against Owner or Engineer, or any of their officers, directors, members, partners, employees, agents, consultants, or subcontractors, with respect to:

1. the completeness of such reports and drawings for Contractor's purposes, including, but not limited to, any aspects of the means, methods, techniques, sequences, and procedures of construction to be employed by Contractor, and safety precautions and programs incident thereto; or

2. other data, interpretations, opinions, and information contained in such reports or shown or indicated in such drawings; or

3. any Contractor interpretation of or conclusion drawn from any Technical Data or any such other data, interpretations, opinions, or information.

4. **Contractor is required to visit the site and become familiar with and satisfied as to the general, local, and site conditions that may affect cost, progress, performance, and furnishing of the Work. This is to involve an alert, heads-up, eyes open, reasonable examination of the area and the conditions under which the Work is to be performed (See 5.04 D.2b)**

5.04 *Differing Subsurface or Physical Conditions*

A. *Notice by Contractor*: If Contractor believes that any subsurface or physical condition that is uncovered or revealed at the Site either:

1. is of such a nature as to establish that any Technical Data on which Contractor is entitled to rely as provided in Paragraph 5.03 is materially inaccurate; or

2. is of such a nature as to require a change in the Drawings or Specifications; or

3. differs materially from that shown or indicated in the Contract Documents; or

4. is of an unusual nature, and differs materially from conditions ordinarily encountered and generally recognized as inherent in work of the character provided for in the Contract Documents;

then Contractor shall, promptly after becoming aware thereof and before further disturbing the subsurface or physical conditions or performing any Work in connection therewith (except in an emergency as required by Paragraph 7.15), notify Owner and Engineer in writing about such condition **within 15 calendar days of discovery**. Contractor

Copyright © 2013 National Society of Professional Engineers, American Council of Engineering Companies, and American Society of Civil Engineers. All rights reserved.

shall not further disturb such condition or perform any Work in connection therewith (except with respect to an emergency) until receipt of a written statement permitting Contractor to do so.

No Change Proposal or Claim for an adjustment in Contract Price or Contract Time (including Milestones) will be valid for differing subsurface or physical conditions if notice provisions of the Paragraph 5.04 are not followed.

B. *Engineer's Review*: After receipt of written notice as required by the preceding paragraph, Engineer will promptly review the subsurface or physical condition in question; determine the necessity of Owner's obtaining additional exploration or tests with respect to the condition; conclude whether the condition falls within any one or more of the differing site condition categories in Paragraph 5.04.A above; obtain any pertinent cost or schedule information from Contractor; prepare recommendations to Owner regarding the Contractor's resumption of Work in connection with the subsurface or physical condition in question and the need for any change in the Drawings or Specifications; and advise Owner in writing of Engineer's findings, conclusions, and recommendations.

C. *Owner's Statement to Contractor Regarding Site Condition*: After receipt of Engineer's written findings, conclusions, and recommendations, Owner shall issue a written statement to Contractor (with a copy to Engineer) regarding the subsurface or physical condition in question, addressing the resumption of Work in connection with such condition, indicating whether any change in the Drawings or Specifications will be made, and adopting or rejecting Engineer's written findings, conclusions, and recommendations, in whole or in part.

D. *Possible Price and Times Adjustments*:

1. Contractor shall be entitled to an equitable adjustment in Contract Price or Contract Times, or both, to the extent that the existence of a differing subsurface or physical condition, or any related delay, disruption, or interference, causes an increase or decrease in Contractor's cost of, or time required for, performance of the Work; subject, however, to the following:

   a. such condition must fall within any one or more of the categories described in Paragraph 5.04.A;

   b. with respect to Work that is paid for on a unit price basis, any adjustment in Contract Price will be subject to the provisions of Paragraph 13.03; and,

   c. Contractor's entitlement to an adjustment of the Contract Times is conditioned on such adjustment being essential to Contractor's ability to complete the Work within the Contract Times.

2. Contractor shall not be entitled to any adjustment in the Contract Price or Contract Times with respect to a subsurface or physical condition if:

   a. Contractor knew of the existence of such condition at the time Contractor made a commitment to Owner with respect to Contract Price and Contract Times by the submission of a Bid or becoming bound under a negotiated contract, or otherwise; or

   b. the existence of such condition reasonably could have been discovered or revealed as a result of any examination, investigation, exploration, test, or study of the Site and contiguous areas expressly required by the Bidding Requirements

Copyright © 2013 National Society of Professional Engineers, American Council of Engineering Companies, and American Society of Civil Engineers. All rights reserved.

or Contract Documents to be conducted by or for Contractor prior to Contractor's making such commitment; or

c. Contractor failed to give the written notice as required by Paragraph 5.04.A.

3. If Owner and Contractor agree regarding Contractor's entitlement to and the amount or extent of any adjustment in the Contract Price or Contract Times, or both, then any such adjustment shall be set forth in a Change Order.

4. Contractor may submit a Change Proposal regarding its entitlement to or the amount or extent of any adjustment in the Contract Price or Contract Times, or both, no later than 30 days after Owner's issuance of the Owner's written statement to Contractor regarding the subsurface or physical condition in question.

5.05 *Underground Facilities*

A. *Contractor's Responsibilities*: The information and data shown or indicated in the Contract Documents with respect to existing Underground Facilities at or adjacent to the Site is based on information and data furnished to Owner or Engineer by the owners of such Underground Facilities, including Owner, or by others. Unless it is otherwise expressly provided in the Supplementary Conditions:

1. Owner and Engineer do not warrant or guarantee the accuracy or completeness of any such information or data provided by others; and

2. the cost of all of the following will be included in the Contract Price, and Contractor shall have full responsibility for:

a. reviewing and checking all information and data regarding existing Underground Facilities at the Site;

b. locating all Underground Facilities shown or indicated in the Contract Documents as being at the Site;

c. coordination of the Work with the owners (including Owner) of such Underground Facilities, during construction; and

d. the safety and protection of all existing Underground Facilities at the Site, and repairing any damage thereto resulting from the Work.

e. **Before beginning any excavation, the Contractor shall contact the appropriate "one call" underground utility locate service and/or notify all owners of underground facilities (as applicable) and coordinate the Work with the owners of such underground facilities. The information shown or indicated in the Contract Documents with respect to existing underground facilities is based on information and data obtained from the owners of the facilities without field exploration and as such Owner and Engineer are not responsible for the accuracy or completeness of such information or data.**

B. *Notice by Contractor*: If Contractor believes that an Underground Facility that is uncovered or revealed at the Site **is unusual and payment per the applicable unit price item Bid for encountering existing Underground Facilities isn't applicable** was not shown or indicated in the Contract Documents, or was not shown or indicated with reasonable accuracy, then Contractor shall, promptly after becoming aware thereof and before further disturbing conditions affected thereby or performing any Work in connection therewith (except in an emergency as required by Paragraph 7.15), identify the owner of such Underground Facility and give written notice to that owner and to Owner and Engineer.

Copyright © 2013 National Society of Professional Engineers, American Council of Engineering Companies, and American Society of Civil Engineers. All rights reserved.

C. *Engineer's Review*: Engineer will promptly review the Underground Facility and conclude whether such Underground Facility was not shown or indicated in the Contract Documents, or was not shown or indicated with reasonable accuracy; obtain any pertinent cost or schedule information from Contractor; prepare recommendations to Owner regarding the Contractor's resumption of Work in connection with the Underground Facility in question; determine the extent, if any, to which a change is required in the Drawings or Specifications to reflect and document the consequences of the existence or location of the Underground Facility; and advise Owner in writing of Engineer's findings, conclusions, and recommendations. During such time, Contractor shall be responsible for the safety and protection of such Underground Facility.

D. *Owner's Statement to Contractor Regarding Underground Facility*: After receipt of Engineer's written findings, conclusions, and recommendations, Owner shall issue a written statement to Contractor (with a copy to Engineer) regarding the Underground Facility in question, addressing the resumption of Work in connection with such Underground Facility, indicating whether any change in the Drawings or Specifications will be made, and adopting or rejecting Engineer's written findings, conclusions, and recommendations in whole or in part.

E. *Possible Price and Times Adjustments*:

1. Contractor shall **be paid at the unit price Bid for encountering Underground Facilities and will not** be entitled to **additional** equitable adjustment in the Contract Price or Contract Times, or both, **unless the Engineer's review determines that the existing facility is unusual and shouldn't be covered by the unit price and the** ~~to the extent that any~~ existing Underground Facility at the Site ~~that~~ was not shown or indicated in the Contract Documents, or was not shown or indicated with reasonable accuracy, ~~or any related~~ and resulted in delay, disruption, or interference, ~~causes~~ causing an increase or decrease in Contractor's cost of, or time required for, performance of the Work; subject, however, to the following:

   a. Contractor did not know of and could not reasonably have been expected to be aware of or to have anticipated the existence or actual location of the Underground Facility in question;

   b. With respect to Work that is paid for on a unit price basis, any adjustment in Contract Price will be subject to the provisions of Paragraph 13.03;

   c. Contractor's entitlement to an adjustment of the Contract Times is conditioned on such adjustment being essential to Contractor's ability to complete the Work within the Contract Times; and

   d. Contractor gave the notice required in Paragraph 5.05.B.

2. If Owner and Contractor agree regarding Contractor's entitlement to and the amount or extent of any adjustment in the Contract Price or Contract Times, or both, then any such adjustment shall be set forth in a Change Order.

3. Contractor may submit a Change Proposal regarding its entitlement to or the amount or extent of any adjustment in the Contract Price or Contract Times, or both, no later than 30 days after Owner's issuance of the Owner's written statement to Contractor regarding the Underground Facility in question.

Copyright © 2013 National Society of Professional Engineers, American Council of Engineering Companies, and American Society of Civil Engineers. All rights reserved.

5.06 *Hazardous Environmental Conditions at Site*

A. *Reports and Drawings*: The Supplementary Conditions identify:

1. those reports and drawings known to Owner relating to Hazardous Environmental Conditions that have been identified at or adjacent to the Site; and

2. Technical Data contained in such reports and drawings.

B. *Reliance by Contractor on Technical Data Authorized*: Contractor may rely upon the accuracy of the Technical Data expressly identified in the Supplementary Conditions with respect to such reports and drawings, but such reports and drawings are not Contract Documents. If no such express identification has been made, then Contractor may rely on the accuracy of the Technical Data (as defined in Article 1) contained in any geotechnical or environmental report prepared for the Project and made available to Contractor. Except for such reliance on Technical Data, Contractor may not rely upon or make any claim against Owner or Engineer, or any of their officers, directors, members, partners, employees, agents, consultants, or subcontractors with respect to:

1. the completeness of such reports and drawings for Contractor's purposes, including, but not limited to, any aspects of the means, methods, techniques, sequences and procedures of construction to be employed by Contractor and safety precautions and programs incident thereto; or

2. other data, interpretations, opinions and information contained in such reports or shown or indicated in such drawings; or

3. any Contractor interpretation of or conclusion drawn from any Technical Data or any such other data, interpretations, opinions or information.

C. Contractor shall not be responsible for removing or remediating any Hazardous Environmental Condition encountered, uncovered, or revealed at the Site unless such removal or remediation is expressly identified in the Contract Documents to be within the scope of the Work.

D. Contractor shall be responsible for controlling, containing, and duly removing all Constituents of Concern brought to the Site by Contractor, Subcontractors, Suppliers, or anyone else for whom Contractor is responsible, and for any associated costs; and for the costs of removing and remediating any Hazardous Environmental Condition created by the presence of any such Constituents of Concern.

E. If Contractor encounters, uncovers, or reveals a Hazardous Environmental Condition whose removal or remediation is not expressly identified in the Contract Documents as being within the scope of the Work, or if Contractor or anyone for whom Contractor is responsible creates a Hazardous Environmental Condition, then Contractor shall immediately: (1) secure or otherwise isolate such condition; (2) stop all Work in connection with such condition and in any area affected thereby (except in an emergency as required by Paragraph 7.15); and (3) notify Owner and Engineer (and promptly thereafter confirm such notice in writing). Owner shall promptly consult with Engineer concerning the necessity for Owner to retain a qualified expert to evaluate such condition or take corrective action, if any. Promptly after consulting with Engineer, Owner shall take such actions as are necessary to permit Owner to timely obtain required permits and provide Contractor the written notice required by Paragraph 5.06.F. If Contractor or anyone for whom Contractor is responsible created the Hazardous Environmental Condition in question, then Owner may remove and remediate the Hazardous Environmental Condition, and impose a set-off against payments to account for the associated costs.

Copyright © 2013 National Society of Professional Engineers, American Council of Engineering Companies, and American Society of Civil Engineers. All rights reserved.

F. Contractor shall not resume Work in connection with such Hazardous Environmental Condition or in any affected area until after Owner has obtained any required permits related thereto, and delivered written notice to Contractor either (1) specifying that such condition and any affected area is or has been rendered safe for the resumption of Work, or (2) specifying any special conditions under which such Work may be resumed safely.

G. If Owner and Contractor cannot agree as to entitlement to or on the amount or extent, if any, of any adjustment in Contract Price or Contract Times, or both, as a result of such Work stoppage or such special conditions under which Work is agreed to be resumed by Contractor, then within 30 days of Owner's written notice regarding the resumption of Work, Contractor may submit a Change Proposal, or Owner may impose a set-off.

H. If after receipt of such written notice Contractor does not agree to resume such Work based on a reasonable belief it is unsafe, or does not agree to resume such Work under such special conditions, then Owner may order the portion of the Work that is in the area affected by such condition to be deleted from the Work, following the contractual change procedures in Article 11. Owner may have such deleted portion of the Work performed by Owner's own forces or others in accordance with Article 8.

I. To the fullest extent permitted by Laws and Regulations, Owner shall indemnify and hold harmless Contractor, Subcontractors, and Engineer, and the officers, directors, members, partners, employees, agents, consultants, and subcontractors of each and any of them from and against all claims, costs, losses, and damages (including but not limited to all fees and charges of engineers, architects, attorneys, and other professionals and all court or arbitration or other dispute resolution costs) arising out of or relating to a Hazardous Environmental Condition, provided that such Hazardous Environmental Condition (1) was not shown or indicated in the Drawings, Specifications, or other Contract Documents, identified as Technical Data entitled to limited reliance pursuant to Paragraph 5.06.B, or identified in the Contract Documents to be included within the scope of the Work, and (2) was not created by Contractor or by anyone for whom Contractor is responsible. Nothing in this Paragraph 5.06.H shall obligate Owner to indemnify any individual or entity from and against the consequences of that individual's or entity's own negligence.

J. To the fullest extent permitted by Laws and Regulations, Contractor shall indemnify and hold harmless Owner and Engineer, and the officers, directors, members, partners, employees, agents, consultants, and subcontractors of each and any of them from and against all claims, costs, losses, and damages (including but not limited to all fees and charges of engineers, architects, attorneys, and other professionals and all court or arbitration or other dispute resolution costs) arising out of or relating to the failure to control, contain, or remove a Constituent of Concern brought to the Site by Contractor or by anyone for whom Contractor is responsible, or to a Hazardous Environmental Condition created by Contractor or by anyone for whom Contractor is responsible. Nothing in this Paragraph 5.06.J shall obligate Contractor to indemnify any individual or entity from and against the consequences of that individual's or entity's own negligence.

K. The provisions of Paragraphs 5.03, 5.04, and 5.05 do not apply to the presence of Constituents of Concern or to a Hazardous Environmental Condition uncovered or revealed at the Site.

Copyright © 2013 National Society of Professional Engineers, American Council of Engineering Companies, and American Society of Civil Engineers. All rights reserved.

ARTICLE 6 – BONDS AND INSURANCE

6.01 *Performance, Payment, and Other Bonds*

A. Contractor shall furnish a performance bond and a payment bond, each in an amount at least equal to the Contract Price, as security for the faithful performance and payment of all of Contractor's obligations under the Contract. These bonds shall remain in effect until one year after the date when final payment becomes due or until completion of the correction period specified in Paragraph 15.08, whichever is later, except as provided otherwise by Laws or Regulations, the Supplementary Conditions, or other specific provisions of the Contract. Contractor shall also furnish such other bonds as are required by the Supplementary Conditions or other specific provisions of the Contract.

B. All bonds shall be in the form prescribed by the Contract except as provided otherwise by Laws or Regulations, and shall be executed by such sureties as are named in "Companies Holding Certificates of Authority as Acceptable Sureties on Federal Bonds and as Acceptable Reinsuring Companies" as published in Circular 570 (as amended and supplemented) by the Financial Management Service, Surety Bond Branch, U.S. Department of the Treasury. A bond signed by an agent or attorney-in-fact must be accompanied by a certified copy of that individual's authority to bind the surety. The evidence of authority shall show that it is effective on the date the agent or attorney-in-fact signed the accompanying bond.

C. Contractor shall obtain the required bonds from surety companies that are duly licensed or authorized in the jurisdiction in which the Project is located to issue bonds in the required amounts.

D. If the surety on a bond furnished by Contractor is declared bankrupt or becomes insolvent, or its right to do business is terminated in any state or jurisdiction where any part of the Project is located, or the surety ceases to meet the requirements above, then Contractor shall promptly notify Owner and Engineer and shall, within 20 days after the event giving rise to such notification, provide another bond and surety, both of which shall comply with the bond and surety requirements above.

E. If Contractor has failed to obtain a required bond, Owner may exclude the Contractor from the Site and exercise Owner's termination rights under Article 16.

F. Upon request, Owner shall provide a copy of the payment bond to any Subcontractor, Supplier, or other person or entity claiming to have furnished labor or materials used in the performance of the Work.

6.02 *Insurance—General Provisions*

A. Owner and Contractor shall obtain and maintain insurance as required in this Article and in the Supplementary Conditions.

B. All insurance required by the Contract to be purchased and maintained by Owner or Contractor shall be obtained from insurance companies that are duly licensed or authorized, in the state or jurisdiction in which the Project is located, to issue insurance policies for the required limits and coverages. Unless a different standard is indicated in the Supplementary Conditions, all companies that provide insurance policies required under this Contract shall have an A.M. Best rating of A-VII or better.

C. Contractor shall deliver to Owner, with copies to each named insured and additional insured (as identified in this Article, in the Supplementary Conditions, or elsewhere in the Contract), certificates of insurance establishing that Contractor has obtained and is

Copyright © 2013 National Society of Professional Engineers, American Council of Engineering Companies, and American Society of Civil Engineers. All rights reserved.

maintaining the policies, coverages, and endorsements required by the Contract. Upon request by Owner or any other insured, Contractor shall also furnish other evidence of such required insurance, including but not limited to copies of policies and endorsements, and documentation of applicable self-insured retentions and deductibles. Contractor may block out (redact) any confidential premium or pricing information contained in any policy or endorsement furnished under this provision.

D. Owner shall deliver to Contractor, with copies to each named insured and additional insured (as identified in this Article, the Supplementary Conditions, or elsewhere in the Contract), certificates of insurance establishing that Owner has obtained and is maintaining the policies, coverages, and endorsements required of Owner by the Contract (if any). Upon request by Contractor or any other insured, Owner shall also provide other evidence of such required insurance (if any), including but not limited to copies of policies and endorsements, and documentation of applicable self-insured retentions and deductibles. Owner may block out (redact) any confidential premium or pricing information contained in any policy or endorsement furnished under this provision.

E. Failure of Owner or Contractor to demand such certificates or other evidence of the other party's full compliance with these insurance requirements, or failure of Owner or Contractor to identify a deficiency in compliance from the evidence provided, shall not be construed as a waiver of the other party's obligation to obtain and maintain such insurance.

F. If either party does not purchase or maintain all of the insurance required of such party by the Contract, such party shall notify the other party in writing of such failure to purchase prior to the start of the Work, or of such failure to maintain prior to any change in the required coverage.

G. If Contractor has failed to obtain and maintain required insurance, Owner may exclude the Contractor from the Site, impose an appropriate set-off against payment, and exercise Owner's termination rights under Article 16.

H. Without prejudice to any other right or remedy, if a party has failed to obtain required insurance, the other party may elect to obtain equivalent insurance to protect such other party's interests at the expense of the party who was required to provide such coverage, and the Contract Price shall be adjusted accordingly.

I. Owner does not represent that insurance coverage and limits established in this Contract necessarily will be adequate to protect Contractor or Contractor's interests.

J. The insurance and insurance limits required herein shall not be deemed as a limitation on Contractor's liability under the indemnities granted to Owner and other individuals and entities in the Contract.

6.03 *Contractor's Insurance*

A. *Workers' Compensation*: Contractor shall purchase and maintain workers' compensation and employer's liability insurance for:

1. claims under workers' compensation, disability benefits, and other similar employee benefit acts.

2. United States Longshoreman and Harbor Workers' Compensation Act and Jones Act coverage (if applicable).

3. claims for damages because of bodily injury, occupational sickness or disease, or death of Contractor's employees (by stop-gap endorsement in monopolist worker's compensation states).

Copyright © 2013 National Society of Professional Engineers, American Council of Engineering Companies, and American Society of Civil Engineers. All rights reserved.

4. Foreign voluntary worker compensation (if applicable).

B. *Commercial General Liability—Claims Covered*: Contractor shall purchase and maintain commercial general liability insurance, covering all operations by or on behalf of Contractor, on an occurrence basis, against:

1. claims for damages because of bodily injury, sickness or disease, or death of any person other than Contractor's employees.

2. claims for damages insured by reasonably available personal injury liability coverage.

3. claims for damages, other than to the Work itself, because of injury to or destruction of tangible property wherever located, including loss of use resulting therefrom.

C. *Commercial General Liability—Form and Content*: Contractor's commercial liability policy shall be written on a 1996 (or later) ISO commercial general liability form (occurrence form) and include the following coverages and endorsements:

1. Products and completed operations coverage:

   a. Such insurance shall be maintained for three years after final payment.

   b. Contractor shall furnish Owner and each other additional insured (as identified in the Supplementary Conditions or elsewhere in the Contract) evidence of continuation of such insurance at final payment and three years thereafter.

2. Blanket contractual liability coverage, to the extent permitted by law, including but not limited to coverage of Contractor's contractual indemnity obligations in Paragraph 7.18.

3. Broad form property damage coverage.

4. Severability of interest.

5. Underground, explosion, and collapse coverage.

6. Personal injury coverage.

7. Additional insured endorsements that include both ongoing operations and products and completed operations coverage through ISO Endorsements CG 20 10 10 01 and CG 20 37 10 01 (together); or CG 20 10 07 04 and CG 20 37 07 04 (together); or their equivalent.

8. For design professional additional insureds, ISO Endorsement CG 20 32 07 04, "Additional Insured—Engineers, Architects or Surveyors Not Engaged by the Named Insured" or its equivalent.

D. *Automobile liability*: Contractor shall purchase and maintain automobile liability insurance against claims for damages because of bodily injury or death of any person or property damage arising out of the ownership, maintenance, or use of any motor vehicle. The automobile liability policy shall be written on an occurrence basis.

E. *Umbrella or excess liability*: Contractor shall purchase and maintain umbrella or excess liability insurance written over the underlying employer's liability, commercial general liability, and automobile liability insurance described in the paragraphs above. Subject to industry-standard exclusions, the coverage afforded shall follow form as to each and every one of the underlying policies.

F. *Contractor's pollution liability insurance*: Contractor shall purchase and maintain a policy covering third-party injury and property damage claims, including clean-up costs, as a result

Copyright © 2013 National Society of Professional Engineers, American Council of Engineering Companies, and American Society of Civil Engineers. All rights reserved.

of pollution conditions arising from Contractor's operations and completed operations. This insurance shall be maintained for no less than three years after final completion.

G. *Additional insureds*: The Contractor's commercial general liability, automobile liability, umbrella or excess, and pollution liability policies shall include and list as additional insureds Owner and Engineer, and any individuals or entities identified in the Supplementary Conditions; include coverage for the respective officers, directors, members, partners, employees, agents, consultants, and subcontractors of each and any of all such additional insureds; and the insurance afforded to these additional insureds shall provide primary coverage for all claims covered thereby (including as applicable those arising from both ongoing and completed operations) on a non-contributory basis. Contractor shall obtain all necessary endorsements to support these requirements.

H. *Contractor's professional liability insurance*: If Contractor will provide or furnish professional services under this Contract, through a delegation of professional design services or otherwise, then Contractor shall be responsible for purchasing and maintaining applicable professional liability insurance. This insurance shall provide protection against claims arising out of performance of professional design or related services, and caused by a negligent error, omission, or act for which the insured party is legally liable. It shall be maintained throughout the duration of the Contract and for a minimum of two years after Substantial Completion. If such professional design services are performed by a Subcontractor, and not by Contractor itself, then the requirements of this paragraph may be satisfied through the purchasing and maintenance of such insurance by such Subcontractor.

I. *General provisions*: The policies of insurance required by this Paragraph 6.03 shall:

1. include at least the specific coverages provided in this Article.
2. be written for not less than the limits of liability provided in this Article and in the Supplementary Conditions, or required by Laws or Regulations, whichever is greater.
3. contain a provision or endorsement that the coverage afforded will not be canceled, materially changed, or renewal refused until at least 10 days prior written notice has been given to Contractor. Within three days of receipt of any such written notice, Contractor shall provide a copy of the notice to Owner, Engineer, and each other insured under the policy.
4. remain in effect at least until final payment (and longer if expressly required in this Article) and at all times thereafter when Contractor may be correcting, removing, or replacing defective Work as a warranty or correction obligation, or otherwise, or returning to the Site to conduct other tasks arising from the Contract Documents.
5. be appropriate for the Work being performed and provide protection from claims that may arise out of or result from Contractor's performance of the Work and Contractor's other obligations under the Contract Documents, whether it is to be performed by Contractor, any Subcontractor or Supplier, or by anyone directly or indirectly employed by any of them to perform any of the Work, or by anyone for whose acts any of them may be liable.

J. The coverage requirements for specific policies of insurance must be met by such policies, and not by reference to excess or umbrella insurance provided in other policies.

Copyright © 2013 National Society of Professional Engineers, American Council of Engineering Companies, and American Society of Civil Engineers. All rights reserved.

6.04 *Owner's Liability Insurance*

A. In addition to the insurance required to be provided by Contractor under Paragraph 6.03, Owner, at Owner's option, may purchase and maintain at Owner's expense Owner's own liability insurance as will protect Owner against claims which may arise from operations under the Contract Documents.

B. Owner's liability policies, if any, operate separately and independently from policies required to be provided by Contractor, and Contractor cannot rely upon Owner's liability policies for any of Contractor's obligations to the Owner, Engineer, or third parties.

6.05 *Property Insurance*

A. *Builder's Risk*: Unless otherwise provided in the Supplementary Conditions, Contractor shall purchase and maintain builder's risk insurance upon the Work on a completed value basis, in the amount of the full insurable replacement cost thereof (subject to such deductible amounts as may be provided in the Supplementary Conditions or required by Laws and Regulations). This insurance shall:

1. include the Owner and Contractor as named insureds, and all Subcontractors, and any individuals or entities required by the Supplementary Conditions to be insured under such builder's risk policy, as insureds or named insureds. For purposes of the remainder of this Paragraph 6.05, Paragraphs 6.06 and 6.07, and any corresponding Supplementary Conditions, the parties required to be insured shall collectively be referred to as "insureds."

2. be written on a builder's risk "all risk" policy form that shall at least include insurance for physical loss or damage to the Work, temporary buildings, falsework, and materials and equipment in transit, and shall insure against at least the following perils or causes of loss: fire; lightning; windstorm; riot; civil commotion; terrorism; vehicle impact; aircraft; smoke; theft; vandalism and malicious mischief; mechanical breakdown, boiler explosion, and artificially generated electric current; earthquake; volcanic activity, and other earth movement; flood; collapse; explosion; debris removal; demolition occasioned by enforcement of Laws and Regulations; water damage (other than that caused by flood); and such other perils or causes of loss as may be specifically required by the Supplementary Conditions. If insurance against mechanical breakdown, boiler explosion, and artificially generated electric current; earthquake; volcanic activity, and other earth movement; or flood, are not commercially available under builder's risk policies, by endorsement or otherwise, such insurance may be provided through other insurance policies acceptable to Owner and Contractor.

3. cover, as insured property, at least the following: (a) the Work and all materials, supplies, machinery, apparatus, equipment, fixtures, and other property of a similar nature that are to be incorporated into or used in the preparation, fabrication, construction, erection, or completion of the Work, including Owner-furnished or assigned property; (b) spare parts inventory required within the scope of the Contract; and (c) temporary works which are not intended to form part of the permanent constructed Work but which are intended to provide working access to the Site, or to the Work under construction, or which are intended to provide temporary support for the Work under construction, including scaffolding, form work, fences, shoring, falsework, and temporary structures.

4. cover expenses incurred in the repair or replacement of any insured property (including but not limited to fees and charges of engineers and architects).

Copyright © 2013 National Society of Professional Engineers, American Council of Engineering Companies, and American Society of Civil Engineers. All rights reserved.

5. extend to cover damage or loss to insured property while in temporary storage at the Site or in a storage location outside the Site (but not including property stored at the premises of a manufacturer or Supplier).
6. extend to cover damage or loss to insured property while in transit.
7. allow for partial occupation or use of the Work by Owner, such that those portions of the Work that are not yet occupied or used by Owner shall remain covered by the builder's risk insurance.
8. allow for the waiver of the insurer's subrogation rights, as set forth below.
9. provide primary coverage for all losses and damages caused by the perils or causes of loss covered.
10. not include a co-insurance clause.
11. include an exception for ensuing losses from physical damage or loss with respect to any defective workmanship, design, or materials exclusions.
12. include performance/hot testing and start-up.
13. be maintained in effect, subject to the provisions herein regarding Substantial Completion and partial occupancy or use of the Work by Owner, until the Work is complete.

B. *Notice of Cancellation or Change*: All the policies of insurance (and the certificates or other evidence thereof) required to be purchased and maintained in accordance with this Paragraph 6.05 will contain a provision or endorsement that the coverage afforded will not be canceled or materially changed or renewal refused until at least 10 days prior written notice has been given to the purchasing policyholder. Within three days of receipt of any such written notice, the purchasing policyholder shall provide a copy of the notice to each other insured.

C. *Deductibles*: The purchaser of any required builder's risk or property insurance shall pay for costs not covered because of the application of a policy deductible.

D. *Partial Occupancy or Use by Owner*: If Owner will occupy or use a portion or portions of the Work prior to Substantial Completion of all the Work as provided in Paragraph 15.04, then Owner (directly, if it is the purchaser of the builder's risk policy, or through Contractor) will provide notice of such occupancy or use to the builder's risk insurer. The builder's risk insurance shall not be canceled or permitted to lapse on account of any such partial use or occupancy; rather, those portions of the Work that are occupied or used by Owner may come off the builder's risk policy, while those portions of the Work not yet occupied or used by Owner shall remain covered by the builder's risk insurance.

E. *Additional Insurance*: If Contractor elects to obtain other special insurance to be included in or supplement the builder's risk or property insurance policies provided under this Paragraph 6.05, it may do so at Contractor's expense.

F. *Insurance of Other Property*: If the express insurance provisions of the Contract do not require or address the insurance of a property item or interest, such as tools, construction equipment, or other personal property owned by Contractor, a Subcontractor, or an employee of Contractor or a Subcontractor, then the entity or individual owning such property item will be responsible for deciding whether to insure it, and if so in what amount.

Copyright © 2013 National Society of Professional Engineers, American Council of Engineering Companies, and American Society of Civil Engineers. All rights reserved.

6.06 *Waiver of Rights*

A. All policies purchased in accordance with Paragraph 6.05, expressly including the builder's risk policy, shall contain provisions to the effect that in the event of payment of any loss or damage the insurers will have no rights of recovery against any insureds thereunder, or against Engineer or its consultants, or their officers, directors, members, partners, employees, agents, consultants, or subcontractors. Owner and Contractor waive all rights against each other and the respective officers, directors, members, partners, employees, agents, consultants, and subcontractors of each and any of them, for all losses and damages caused by, arising out of, or resulting from any of the perils or causes of loss covered by such policies and any other property insurance applicable to the Work; and, in addition, waive all such rights against Engineer, its consultants, all Subcontractors, all individuals or entities identified in the Supplementary Conditions as insureds, and the officers, directors, members, partners, employees, agents, consultants, and subcontractors of each and any of them, under such policies for losses and damages so caused. None of the above waivers shall extend to the rights that any party making such waiver may have to the proceeds of insurance held by Owner or Contractor as trustee or fiduciary, or otherwise payable under any policy so issued.

B. Owner waives all rights against Contractor, Subcontractors, and Engineer, and the officers, directors, members, partners, employees, agents, consultants and subcontractors of each and any of them, for:

1. loss due to business interruption, loss of use, or other consequential loss extending beyond direct physical loss or damage to Owner's property or the Work caused by, arising out of, or resulting from fire or other perils whether or not insured by Owner; and

2. loss or damage to the completed Project or part thereof caused by, arising out of, or resulting from fire or other insured peril or cause of loss covered by any property insurance maintained on the completed Project or part thereof by Owner during partial occupancy or use pursuant to Paragraph 15.04, after Substantial Completion pursuant to Paragraph 15.03, or after final payment pursuant to Paragraph 15.06.

C. Any insurance policy maintained by Owner covering any loss, damage or consequential loss referred to in Paragraph 6.06.B shall contain provisions to the effect that in the event of payment of any such loss, damage, or consequential loss, the insurers will have no rights of recovery against Contractor, Subcontractors, or Engineer, or the officers, directors, members, partners, employees, agents, consultants, or subcontractors of each and any of them.

D. Contractor shall be responsible for assuring that the agreement under which a Subcontractor performs a portion of the Work contains provisions whereby the Subcontractor waives all rights against Owner, Contractor, all individuals or entities identified in the Supplementary Conditions as insureds, the Engineer and its consultants, and the officers, directors, members, partners, employees, agents, consultants, and subcontractors of each and any of them, for all losses and damages caused by, arising out of, relating to, or resulting from any of the perils or causes of loss covered by builder's risk insurance and any other property insurance applicable to the Work.

6.07 *Receipt and Application of Property Insurance Proceeds*

A. Any insured loss under the builder's risk and other policies of insurance required by Paragraph 6.05 will be adjusted and settled with the named insured that purchased the

Copyright © 2013 National Society of Professional Engineers, American Council of Engineering Companies, and American Society of Civil Engineers. All rights reserved.

policy. Such named insured shall act as fiduciary for the other insureds, and give notice to such other insureds that adjustment and settlement of a claim is in progress. Any other insured may state its position regarding a claim for insured loss in writing within 15 days after notice of such claim.

B. Proceeds for such insured losses may be made payable by the insurer either jointly to multiple insureds, or to the named insured that purchased the policy in its own right and as fiduciary for other insureds, subject to the requirements of any applicable mortgage clause. A named insured receiving insurance proceeds under the builder's risk and other policies of insurance required by Paragraph 6.05 shall distribute such proceeds in accordance with such agreement as the parties in interest may reach, or as otherwise required under the dispute resolution provisions of this Contract or applicable Laws and Regulations.

C. If no other special agreement is reached, the damaged Work shall be repaired or replaced, the money so received applied on account thereof, and the Work and the cost thereof covered by Change Order, if needed.

ARTICLE 7 – CONTRACTOR'S RESPONSIBILITIES

7.01 *Supervision and Superintendence*

A. Contractor shall supervise, inspect, and direct the Work competently and efficiently, devoting such attention thereto and applying such skills and expertise as may be necessary to perform the Work in accordance with the Contract Documents. Contractor shall be solely responsible for the means, methods, techniques, sequences, and procedures of construction.

B. At all times during the progress of the Work, Contractor shall assign a competent resident superintendent who shall not be replaced without written notice to Owner and Engineer except under extraordinary circumstances.

7.02 *Labor; Working Hours*

A. Contractor shall provide competent, suitably qualified personnel to survey and lay out the Work and perform construction as required by the Contract Documents. Contractor shall at all times maintain good discipline and order at the Site.

B. Except as otherwise required for the safety or protection of persons or the Work or property at the Site or adjacent thereto, and except as otherwise stated in the Contract Documents, all Work at the Site shall be performed during regular working **hours (8:00AM to 5:00PM)**, Monday through Friday. Contractor will not perform Work on a Saturday, Sunday, or any legal holiday. Contractor may perform Work outside regular working hours or on Saturdays, Sundays, or legal holidays only with Owner's written consent, which will not be unreasonably withheld.

7.03 *Services, Materials, and Equipment*

A. Unless otherwise specified in the Contract Documents, Contractor shall provide and assume full responsibility for all services, materials, equipment, labor, transportation, construction equipment and machinery, tools, appliances, fuel, power, light, heat, telephone, water, sanitary facilities, temporary facilities, and all other facilities and incidentals necessary for the performance, testing, start up, and completion of the Work, whether or not such items are specifically called for in the Contract Documents.

B. All materials and equipment incorporated into the Work shall be of good quality and new, except as otherwise provided in the Contract Documents. All special warranties and

Copyright © 2013 National Society of Professional Engineers, American Council of Engineering Companies, and American Society of Civil Engineers. All rights reserved.

guarantees required by the Specifications shall expressly run to the benefit of Owner. If required by Engineer, Contractor shall furnish satisfactory evidence (including reports of required tests) as to the source, kind, and quality of materials and equipment.

C. All materials and equipment shall be stored, applied, installed, connected, erected, protected, used, cleaned, and conditioned in accordance with instructions of the applicable Supplier, except as otherwise may be provided in the Contract Documents.

7.04 *"Or Equals"*

A. Whenever an item of material or equipment is specified or described in the Contract Documents by using the name of a proprietary item or the name of a particular Supplier, the Contract Price has been based upon Contractor furnishing such item as specified. The specification or description of such an item is intended to establish the type, function, appearance, and quality required. Unless the specification or description contains or is followed by words reading that no like, equivalent, or "or equal" item is permitted, Contractor may request that Engineer authorize the use of other items of material or equipment, or items from other proposed suppliers under the circumstances described below.

1. If Engineer in its sole discretion determines that an item of material or equipment proposed by Contractor is functionally equal to that named and sufficiently similar so that no change in related Work will be required, Engineer shall deem it an "or equal" item. For the purposes of this paragraph, a proposed item of material or equipment will be considered functionally equal to an item so named if:

a. in the exercise of reasonable judgment Engineer determines that:

1) it is at least equal in materials of construction, quality, durability, appearance, strength, and design characteristics;

2) it will reliably perform at least equally well the function and achieve the results imposed by the design concept of the completed Project as a functioning whole;

3) it has a proven record of performance and availability of responsive service; and

4) it is not objectionable to Owner.

b. Contractor certifies that, if approved and incorporated into the Work:

1) there will be no increase in cost to the Owner or increase in Contract Times; and

2) it will conform substantially to the detailed requirements of the item named in the Contract Documents.

B. *Contractor's Expense*: Contractor shall provide all data in support of any proposed "or equal" item at Contractor's expense.

C. *Engineer's Evaluation and Determination*: Engineer will be allowed a reasonable time to evaluate each "or-equal" request. Engineer may require Contractor to furnish additional data about the proposed "or-equal" item. Engineer will be the sole judge of acceptability. No "or-equal" item will be ordered, furnished, installed, or utilized until Engineer's review is complete and Engineer determines that the proposed item is an "or-equal", which will be evidenced by an approved Shop Drawing or other written communication. Engineer will advise Contractor in writing of any negative determination.

Copyright © 2013 National Society of Professional Engineers, American Council of Engineering Companies, and American Society of Civil Engineers. All rights reserved.

D. *Effect of Engineer's Determination*: Neither approval nor denial of an "or-equal" request shall result in any change in Contract Price. The Engineer's denial of an "or-equal" request shall be final and binding, and may not be reversed through an appeal under any provision of the Contract Documents.

E. *Treatment as a Substitution Request*: If Engineer determines that an item of material or equipment proposed by Contractor does not qualify as an "or-equal" item, Contractor may request that Engineer considered the proposed item as a substitute pursuant to Paragraph 7.05.

7.05 *Substitutes*

A. Unless the specification or description of an item of material or equipment required to be furnished under the Contract Documents contains or is followed by words reading that no substitution is permitted, Contractor may request that Engineer authorize the use of other items of material or equipment under the circumstances described below. To the extent possible such requests shall be made before commencement of related construction at the Site.

1. Contractor shall submit sufficient information as provided below to allow Engineer to determine if the item of material or equipment proposed is functionally equivalent to that named and an acceptable substitute therefor. Engineer will not accept requests for review of proposed substitute items of material or equipment from anyone other than Contractor.

2. The requirements for review by Engineer will be as set forth in Paragraph 7.05.B, as supplemented by the Specifications, and as Engineer may decide is appropriate under the circumstances.

3. Contractor shall make written application to Engineer for review of a proposed substitute item of material or equipment that Contractor seeks to furnish or use. The application:

a. shall certify that the proposed substitute item will:

1) perform adequately the functions and achieve the results called for by the general design,

2) be similar in substance to that specified, and

3) be suited to the same use as that specified.

b. will state:

1) the extent, if any, to which the use of the proposed substitute item will necessitate a change in Contract Times,

2) whether use of the proposed substitute item in the Work will require a change in any of the Contract Documents (or in the provisions of any other direct contract with Owner for other work on the Project) to adapt the design to the proposed substitute item, and

3) whether incorporation or use of the proposed substitute item in connection with the Work is subject to payment of any license fee or royalty.

c. will identify:

1) all variations of the proposed substitute item from that specified, and

Copyright © 2013 National Society of Professional Engineers, American Council of Engineering Companies, and American Society of Civil Engineers. All rights reserved.

2) available engineering, sales, maintenance, repair, and replacement services.

d. shall contain an itemized estimate of all costs or credits that will result directly or indirectly from use of such substitute item, including but not limited to changes in Contract Price, shared savings, costs of redesign, and claims of other contractors affected by any resulting change.

B. *Engineer's Evaluation and Determination*: Engineer will be allowed a reasonable time to evaluate each substitute request, and to obtain comments and direction from Owner. Engineer may require Contractor to furnish additional data about the proposed substitute item. Engineer will be the sole judge of acceptability. No substitute will be ordered, furnished, installed, or utilized until Engineer's review is complete and Engineer determines that the proposed item is an acceptable substitute. Engineer's determination will be evidenced by a Field Order or a proposed Change Order accounting for the substitution itself and all related impacts, including changes in Contract Price or Contract Times. Engineer will advise Contractor in writing of any negative determination.

C. *Special Guarantee*: Owner may require Contractor to furnish at Contractor's expense a special performance guarantee or other surety with respect to any substitute.

D. *Reimbursement of Engineer's Cost*: Engineer will record Engineer's costs in evaluating a substitute proposed or submitted by Contractor. Whether or not Engineer approves a substitute so proposed or submitted by Contractor, Contractor shall reimburse Owner for the reasonable charges of Engineer for evaluating each such proposed substitute. Contractor shall also reimburse Owner for the reasonable charges of Engineer for making changes in the Contract Documents (or in the provisions of any other direct contract with Owner) resulting from the acceptance of each proposed substitute.

E. *Contractor's Expense*: Contractor shall provide all data in support of any proposed substitute at Contractor's expense.

F. *Effect of Engineer's Determination*: If Engineer approves the substitution request, Contractor shall execute the proposed Change Order and proceed with the substitution. The Engineer's denial of a substitution request shall be final and binding, and may not be reversed through an appeal under any provision of the Contract Documents. Contractor may challenge the scope of reimbursement costs imposed under Paragraph 7.05.D, by timely submittal of a Change Proposal.

7.06 *Concerning Subcontractors, Suppliers, and Others*

A. Contractor may retain Subcontractors and Suppliers for the performance of parts of the Work. Such Subcontractors and Suppliers must be acceptable to Owner. **The Contractor shall not award work valued at more than fifty percent (50%) of the Contract Price to Subcontractor(s), without prior written approval of the Owner.**

~~B.~~ **Deleted.** ~~Contractor shall retain specific Subcontractors, Suppliers, or other individuals or entities for the performance of designated parts of the Work if required by the Contract to do so.~~

C. Subsequent to the submittal of Contractor's Bid or final negotiation of the terms of the Contract, Owner may not require Contractor to retain any Subcontractor, Supplier, or other individual or entity to furnish or perform any of the Work against which Contractor has reasonable objection.

D. Prior to entry into any binding subcontract or purchase order, Contractor shall submit to Owner the identity of the proposed Subcontractor or Supplier (unless Owner has already

Copyright © 2013 National Society of Professional Engineers, American Council of Engineering Companies, and American Society of Civil Engineers. All rights reserved.

deemed such proposed Subcontractor or Supplier acceptable, during the bidding process or otherwise). Such proposed Subcontractor or Supplier shall be deemed acceptable to Owner unless Owner raises a substantive, reasonable objection within five days.

E. Owner may require the replacement of any Subcontractor, Supplier, or other individual or entity retained by Contractor to perform any part of the Work. ~~Owner also may require Contractor to retain specific replacements; provided, however, that~~ Owner may not require a replacement to which Contractor has a reasonable objection. If Contractor has submitted the identity of certain Subcontractors, Suppliers, or other individuals or entities for acceptance by Owner, and Owner has accepted it (either in writing or by failing to make written objection thereto), then Owner may subsequently revoke the acceptance of any such Subcontractor, Supplier, or other individual or entity so identified solely on the basis of substantive, reasonable objection after due investigation. Contractor shall submit an acceptable replacement for the rejected Subcontractor, Supplier, or other individual or entity.

F. If Owner requires the replacement of any Subcontractor, Supplier, or other individual or entity retained by Contractor to perform any part of the Work, then Contractor shall be entitled to an adjustment in Contract Price or Contract Times, or both, with respect to the replacement; and Contractor shall initiate a Change Proposal for such adjustment within 30 days of Owner's requirement of replacement.

G. No acceptance by Owner of any such Subcontractor, Supplier, or other individual or entity, whether initially or as a replacement, shall constitute a waiver of the right of Owner to the completion of the Work in accordance with the Contract Documents.

H. On a monthly basis Contractor shall submit to Engineer a complete list of all Subcontractors and Suppliers having a direct contract with Contractor, and of all other Subcontractors and Suppliers known to Contractor at the time of submittal.

I. Contractor shall be fully responsible to Owner and Engineer for all acts and omissions of the Subcontractors, Suppliers, and other individuals or entities performing or furnishing any of the Work just as Contractor is responsible for Contractor's own acts and omissions.

J. Contractor shall be solely responsible for scheduling and coordinating the work of Subcontractors, Suppliers, and all other individuals or entities performing or furnishing any of the Work.

K. Contractor shall restrict all Subcontractors, Suppliers, and such other individuals or entities performing or furnishing any of the Work from communicating with Engineer or Owner, except through Contractor or in case of an emergency, or as otherwise expressly allowed herein.

L. The divisions and sections of the Specifications and the identifications of any Drawings shall not control Contractor in dividing the Work among Subcontractors or Suppliers or delineating the Work to be performed by any specific trade.

M. All Work performed for Contractor by a Subcontractor or Supplier shall be pursuant to an appropriate contractual agreement that specifically binds the Subcontractor or Supplier to the applicable terms and conditions of the Contract Documents for the benefit of Owner and Engineer.

N. Owner may furnish to any Subcontractor or Supplier, to the extent practicable, information about amounts paid to Contractor on account of Work performed for Contractor by the particular Subcontractor or Supplier.

Copyright © 2013 National Society of Professional Engineers, American Council of Engineering Companies, and American Society of Civil Engineers. All rights reserved.

O. Nothing in the Contract Documents:

1. shall create for the benefit of any such Subcontractor, Supplier, or other individual or entity any contractual relationship between Owner or Engineer and any such Subcontractor, Supplier, or other individual or entity; nor

2. shall create any obligation on the part of Owner or Engineer to pay or to see to the payment of any money due any such Subcontractor, Supplier, or other individual or entity except as may otherwise be required by Laws and Regulations.

7.07 *Patent Fees and Royalties*

A. Contractor shall pay all license fees and royalties and assume all costs incident to the use in the performance of the Work or the incorporation in the Work of any invention, design, process, product, or device which is the subject of patent rights or copyrights held by others. If a particular invention, design, process, product, or device is specified in the Contract Documents for use in the performance of the Work and if, to the actual knowledge of Owner or Engineer, its use is subject to patent rights or copyrights calling for the payment of any license fee or royalty to others, the existence of such rights shall be disclosed by Owner in the Contract Documents.

B. To the fullest extent permitted by Laws and Regulations, Owner shall indemnify and hold harmless Contractor, and its officers, directors, members, partners, employees, agents, consultants, and subcontractors from and against all claims, costs, losses, and damages (including but not limited to all fees and charges of engineers, architects, attorneys, and other professionals, and all court or arbitration or other dispute resolution costs) arising out of or relating to any infringement of patent rights or copyrights incident to the use in the performance of the Work or resulting from the incorporation in the Work of any invention, design, process, product, or device specified in the Contract Documents, but not identified as being subject to payment of any license fee or royalty to others required by patent rights or copyrights.

C. To the fullest extent permitted by Laws and Regulations, Contractor shall indemnify and hold harmless Owner and Engineer, and the officers, directors, members, partners, employees, agents, consultants and subcontractors of each and any of them from and against all claims, costs, losses, and damages (including but not limited to all fees and charges of engineers, architects, attorneys, and other professionals and all court or arbitration or other dispute resolution costs) arising out of or relating to any infringement of patent rights or copyrights incident to the use in the performance of the Work or resulting from the incorporation in the Work of any invention, design, process, product, or device not specified in the Contract Documents.

7.08 *Permits*

A. Unless otherwise provided in the Contract Documents, Contractor shall obtain and pay for all construction permits and licenses. Owner shall assist Contractor, when necessary, in obtaining such permits and licenses. Contractor shall pay all governmental charges and inspection fees necessary for the prosecution of the Work which are applicable at the time of the submission of Contractor's Bid (or when Contractor became bound under a negotiated contract). Owner shall pay all charges of utility owners for connections for providing permanent service to the Work

Copyright © 2013 National Society of Professional Engineers, American Council of Engineering Companies, and American Society of Civil Engineers. All rights reserved.

7.09 *Taxes*

A. Contractor shall pay all sales, consumer, use, and other similar taxes required to be paid by Contractor in accordance with the Laws and Regulations of the place of the Project which are applicable during the performance of the Work.

7.10 *Laws and Regulations*

A. Contractor shall give all notices required by and shall comply with all Laws and Regulations applicable to the performance of the Work. Except where otherwise expressly required by applicable Laws and Regulations, neither Owner nor Engineer shall be responsible for monitoring Contractor's compliance with any Laws or Regulations.

B. If Contractor performs any Work or takes any other action knowing or having reason to know that it is contrary to Laws or Regulations, Contractor shall bear all resulting costs and losses, and shall indemnify and hold harmless Owner and Engineer, and the officers, directors, members, partners, employees, agents, consultants, and subcontractors of each and any of them from and against all claims, costs, losses, and damages (including but not limited to all fees and charges of engineers, architects, attorneys, and other professionals and all court or arbitration or other dispute resolution costs) arising out of or relating to such Work or other action. It shall not be Contractor's responsibility to make certain that the Work described in the Contract Documents is in accordance with Laws and Regulations, but this shall not relieve Contractor of Contractor's obligations under Paragraph 3.03.

C. Owner or Contractor may give notice to the other party of any changes after the submission of Contractor's Bid (or after the date when Contractor became bound under a negotiated contract) in Laws or Regulations having an effect on the cost or time of performance of the Work, including but not limited to changes in Laws or Regulations having an effect on procuring permits and on sales, use, value-added, consumption, and other similar taxes. If Owner and Contractor are unable to agree on entitlement to or on the amount or extent, if any, of any adjustment in Contract Price or Contract Times resulting from such changes, then within 30 days of such notice Contractor may submit a Change Proposal, or Owner may initiate a Claim.

7.11 *Record Documents*

A. Contractor shall maintain in a safe place at the Site one printed record copy of all Drawings, Specifications, Addenda, Change Orders, Work Change Directives, Field Orders, written interpretations and clarifications, and approved Shop Drawings. Contractor shall keep such record documents in good order and annotate them to show changes made during construction. These record documents, together with all approved Samples, will be available to Engineer for reference. Upon completion of the Work, Contractor shall deliver these record documents to Engineer. **The Engineer will transfer the Contractor's record information to the original drawings, and submit prints to the Contractor for review. Contractor shall provide writing confirmation that the record drawings are complete and accurate before final payment is approved by the Engineer.**

7.12 *Safety and Protection*

A. Contractor shall be solely responsible for initiating, maintaining, and supervising all safety precautions and programs in connection with the Work. Such responsibility does not relieve Subcontractors of their responsibility for the safety of persons or property in the performance of their work, nor for compliance with applicable safety Laws and Regulations. Contractor shall take all necessary precautions for the safety of, and shall provide the necessary protection to prevent damage, injury, or loss to:

Copyright © 2013 National Society of Professional Engineers, American Council of Engineering Companies, and American Society of Civil Engineers. All rights reserved.

1. all persons on the Site or who may be affected by the Work;
2. all the Work and materials and equipment to be incorporated therein, whether in storage on or off the Site; and
3. other property at the Site or adjacent thereto, including trees, shrubs, lawns, walks, pavements, roadways, structures, other work in progress, utilities, and Underground Facilities not designated for removal, relocation, or replacement in the course of construction.

B. Contractor shall comply with all applicable Laws and Regulations relating to the safety of persons or property, or to the protection of persons or property from damage, injury, or loss; and shall erect and maintain all necessary safeguards for such safety and protection. Contractor shall notify Owner; the owners of adjacent property, Underground Facilities, and other utilities; and other contractors and utility owners performing work at or adjacent to the Site, when prosecution of the Work may affect them, and shall cooperate with them in the protection, removal, relocation, and replacement of their property or work in progress.

C. Contractor shall comply with the applicable requirements of Owner's safety programs, if any. The Supplementary Conditions identify any Owner's safety programs that are applicable to the Work.

D. Contractor shall inform Owner and Engineer of the specific requirements of Contractor's safety program with which Owner's and Engineer's employees and representatives must comply while at the Site.

E. All damage, injury, or loss to any property referred to in Paragraph 7.12.A.2 or 7.12.A.3 caused, directly or indirectly, in whole or in part, by Contractor, any Subcontractor, Supplier, or any other individual or entity directly or indirectly employed by any of them to perform any of the Work, or anyone for whose acts any of them may be liable, shall be remedied by Contractor at its expense (except damage or loss attributable to the fault of Drawings or Specifications or to the acts or omissions of Owner or Engineer or anyone employed by any of them, or anyone for whose acts any of them may be liable, and not attributable, directly or indirectly, in whole or in part, to the fault or negligence of Contractor or any Subcontractor, Supplier, or other individual or entity directly or indirectly employed by any of them).

F. Contractor's duties and responsibilities for safety and protection shall continue until such time as all the Work is completed and Engineer has issued a notice to Owner and Contractor in accordance with Paragraph 15.06.B that the Work is acceptable (except as otherwise expressly provided in connection with Substantial Completion).

G. Contractor's duties and responsibilities for safety and protection shall resume whenever Contractor or any Subcontractor or Supplier returns to the Site to fulfill warranty or correction obligations, or to conduct other tasks arising from the Contract Documents.

H. **It is expressly understood by the parties to this Agreement that the Contractor is solely responsible for initiation, maintenance, and supervision of safety precautions and programs in connection with the Work. The right of the Owner and Engineer to observe or otherwise review the Work and operations shall not relieve the Contractor from any of his covenants and obligations hereunder.**

I. **The Contractor shall be responsible for and shall take necessary precautions and provide all material and equipment to protect, shore, brace and maintain all underground pipes, conduits, drains, sewers, water mains, gas mains, cables, and other underground**

Copyright © 2013 National Society of Professional Engineers, American Council of Engineering Companies, and American Society of Civil Engineers. All rights reserved.

construction uncovered in the proximity or otherwise affected by the Work. All pavement surfacing, driveways, curbs, walks, buildings, grass areas, trees, utility poles or guy wires damaged by the Contractor in performance of the Work shall be repaired and/or replaced to the satisfaction of the Owner, Engineer and effected property owner at the Contractor's expense. The Contractor shall also be responsible for all damage to streets, roads, highways, shoulders, ditches, embankments, culverts, bridges or other public or private property or facility, regardless of location or character, which may be caused by moving, hauling, or otherwise transporting equipment, materials, or men to and from the Work whether by Contractor or Subcontractors. The Contractor shall make satisfactory and acceptable arrangements with the owner of, or the agency or authority having jurisdiction over the damaged property or facility concerning its repair, replacement or payment of costs incurred in connection with said damage.

J. **The Contractor shall conduct its work so as to interfere as little as possible with public travel, whether vehicular or pedestrian. Whenever it is necessary to cross, obstruct or close roads, driveways, and walks, whether public or private, the Contactor shall obtain approval from the governing party and shall at its own expense provide and maintain suitable and safe bridges, detours and other temporary expedients for the accommodation of public and private drives before interfering with them. The provision for temporary expedients will not be required if the Contractor has obtained permission from the owner and tenant of the private property, or from the authority having jurisdiction over public property involved, to obstruct traffic at the designated point.**

K. **Safety provisions must be entirely adequate and meet with city, state or Federal regulations to protect the public on the sidewalks, streets and roads.**

7.13 *Safety Representative*

A. Contractor shall designate a qualified and experienced safety representative at the Site whose duties and responsibilities shall be the prevention of accidents and the maintaining and supervising of safety precautions and programs.

7.14 *Hazard Communication Programs*

A. Contractor shall be responsible for coordinating any exchange of material safety data sheets or other hazard communication information required to be made available to or exchanged between or among employers at the Site in accordance with Laws or Regulations.

7.15 *Emergencies*

A. In emergencies affecting the safety or protection of persons or the Work or property at the Site or adjacent thereto, Contractor is obligated to act to prevent threatened damage, injury, or loss. Contractor shall give Engineer prompt written notice if Contractor believes that any significant changes in the Work or variations from the Contract Documents have been caused thereby or are required as a result thereof. If Engineer determines that a change in the Contract Documents is required because of the action taken by Contractor in response to such an emergency, a Work Change Directive or Change Order will be issued.

Copyright © 2013 National Society of Professional Engineers, American Council of Engineering Companies, and American Society of Civil Engineers. All rights reserved.

7.16 *Shop Drawings, Samples, and Other Submittals*

A. *Shop Drawing and Sample Submittal Requirements*:

1. Before submitting a Shop Drawing or Sample, Contractor shall have:

a. reviewed and coordinated the Shop Drawing or Sample with other Shop Drawings and Samples and with the requirements of the Work and the Contract Documents;

b. determined and verified all field measurements, quantities, dimensions, specified performance and design criteria, installation requirements, materials, catalog numbers, and similar information with respect thereto;

c. determined and verified the suitability of all materials and equipment offered with respect to the indicated application, fabrication, shipping, handling, storage, assembly, and installation pertaining to the performance of the Work; and

d. determined and verified all information relative to Contractor's responsibilities for means, methods, techniques, sequences, and procedures of construction, and safety precautions and programs incident thereto.

2. Each submittal shall bear a stamp or specific written certification that Contractor has satisfied Contractor's obligations under the Contract Documents with respect to Contractor's review of that submittal, and that Contractor approves the submittal.

3. With each submittal, Contractor shall give Engineer specific written notice of any variations that the Shop Drawing or Sample may have from the requirements of the Contract Documents. This notice shall be set forth in a written communication separate from the Shop Drawings or Sample submittal; and, in addition, in the case of Shop Drawings by a specific notation made on each Shop Drawing submitted to Engineer for review and approval of each such variation.

B. *Submittal Procedures for Shop Drawings and Samples*: Contractor shall submit Shop Drawings and Samples to Engineer for review and approval in accordance with the accepted Schedule of Submittals. Each submittal will be identified as Engineer may require.

1. *Shop Drawings*:

a. Contractor shall submit the number of copies required in the Specifications.

b. Data shown on the Shop Drawings will be complete with respect to quantities, dimensions, specified performance and design criteria, materials, and similar data to show Engineer the services, materials, and equipment Contractor proposes to provide and to enable Engineer to review the information for the limited purposes required by Paragraph 7.16.D.

2. *Samples*:

a. Contractor shall submit the number of Samples required in the Specifications.

b. Contractor shall clearly identify each Sample as to material, Supplier, pertinent data such as catalog numbers, the use for which intended and other data as Engineer may require to enable Engineer to review the submittal for the limited purposes required by Paragraph 7.16.D.

3. Where a Shop Drawing or Sample is required by the Contract Documents or the Schedule of Submittals, any related Work performed prior to Engineer's review and

Copyright © 2013 National Society of Professional Engineers, American Council of Engineering Companies, and American Society of Civil Engineers. All rights reserved.

approval of the pertinent submittal will be at the sole expense and responsibility of Contractor.

C. *Other Submittals*: Contractor shall submit other submittals to Engineer in accordance with the accepted Schedule of Submittals, and pursuant to the applicable terms of the Specifications.

D. *Engineer's Review*:

1. Engineer will provide timely review of Shop Drawings and Samples in accordance with the Schedule of Submittals acceptable to Engineer. Engineer's review and approval will be only to determine if the items covered by the submittals will, after installation or incorporation in the Work, conform to the information given in the Contract Documents and be compatible with the design concept of the completed Project as a functioning whole as indicated by the Contract Documents.

2. Engineer's review and approval will not extend to means, methods, techniques, sequences, or procedures of construction or to safety precautions or programs incident thereto.

3. Engineer's review and approval of a separate item as such will not indicate approval of the assembly in which the item functions.

4. Engineer's review and approval of a Shop Drawing or Sample shall not relieve Contractor from responsibility for any variation from the requirements of the Contract Documents unless Contractor has complied with the requirements of Paragraph 7.16.A.3 and Engineer has given written approval of each such variation by specific written notation thereof incorporated in or accompanying the Shop Drawing or Sample. Engineer will document any such approved variation from the requirements of the Contract Documents in a Field Order.

5. Engineer's review and approval of a Shop Drawing or Sample shall not relieve Contractor from responsibility for complying with the requirements of Paragraph 7.16.A and B.

6. Engineer's review and approval of a Shop Drawing or Sample, or of a variation from the requirements of the Contract Documents, shall not, under any circumstances, change the Contract Times or Contract Price, unless such changes are included in a Change Order.

7. Neither Engineer's receipt, review, acceptance or approval of a Shop Drawing, Sample, or other submittal shall result in such item becoming a Contract Document.

8. Contractor shall perform the Work in compliance with the requirements and commitments set forth in approved Shop Drawings and Samples, subject to the provisions of Paragraph 7.16.D.4.

E. *Resubmittal Procedures*:

1. Contractor shall make corrections required by Engineer and shall return the required number of corrected copies of Shop Drawings and submit, as required, new Samples for review and approval. Contractor shall direct specific attention in writing to revisions other than the corrections called for by Engineer on previous submittals.

2. Contractor shall furnish required submittals with sufficient information and accuracy to obtain required approval of an item with no more than three submittals. Engineer will record Engineer's time for reviewing a fourth or subsequent submittal of a Shop

Copyright © 2013 National Society of Professional Engineers, American Council of Engineering Companies, and American Society of Civil Engineers. All rights reserved.

Drawings, sample, or other item requiring approval, and Contractor shall be responsible for Engineer's charges to Owner for such time. Owner may impose a set-off against payments due to Contractor to secure reimbursement for such charges.

3. If Contractor requests a change of a previously approved submittal item, Contractor shall be responsible for Engineer's charges to Owner for its review time, and Owner may impose a set-off against payments due to Contractor to secure reimbursement for such charges, unless the need for such change is beyond the control of Contractor.

7.17 *Contractor's General Warranty and Guarantee*

A. Contractor warrants and guarantees to Owner that all Work will be in accordance with the Contract Documents and will not be defective. Engineer and its officers, directors, members, partners, employees, agents, consultants, and subcontractors shall be entitled to rely on Contractor's warranty and guarantee.

B. Contractor's warranty and guarantee hereunder excludes defects or damage caused by:

1. abuse, modification, or improper maintenance or operation by persons other than Contractor, Subcontractors, Suppliers, or any other individual or entity for whom Contractor is responsible; or

2. normal wear and tear under normal usage.

C. Contractor's obligation to perform and complete the Work in accordance with the Contract Documents shall be absolute. None of the following will constitute an acceptance of Work that is not in accordance with the Contract Documents or a release of Contractor's obligation to perform the Work in accordance with the Contract Documents:

1. observations by Engineer;

2. recommendation by Engineer or payment by Owner of any progress or final payment;

3. the issuance of a certificate of Substantial Completion by Engineer or any payment related thereto by Owner;

4. use or occupancy of the Work or any part thereof by Owner;

5. any review and approval of a Shop Drawing or Sample submittal;

6. the issuance of a notice of acceptability by Engineer;

7. any inspection, test, or approval by others; or

8. any correction of defective Work by Owner.

D. If the Contract requires the Contractor to accept the assignment of a contract entered into by Owner, then the specific warranties, guarantees, and correction obligations contained in the assigned contract shall govern with respect to Contractor's performance obligations to Owner for the Work described in the assigned contract.

7.18 *Indemnification*

A. To the fullest extent permitted by Laws and Regulations, and in addition to any other obligations of Contractor under the Contract or otherwise, Contractor shall indemnify and hold harmless Owner and Engineer, and the officers, directors, members, partners, employees, agents, consultants and subcontractors of each and any of them from and against all claims, costs, losses, and damages (including but not limited to all fees and charges of engineers, architects, attorneys, and other professionals and all court or arbitration or other dispute resolution costs) arising out of or relating to the performance

Copyright © 2013 National Society of Professional Engineers, American Council of Engineering Companies, and American Society of Civil Engineers. All rights reserved.

of the Work, provided that any such claim, cost, loss, or damage is attributable to bodily injury, sickness, disease, or death, or to injury to or destruction of tangible property (other than the Work itself), including the loss of use resulting therefrom but only to the extent caused by any negligent act or omission of Contractor, any Subcontractor, any Supplier, or any individual or entity directly or indirectly employed by any of them to perform any of the Work or anyone for whose acts any of them may be liable.

B. In any and all claims against Owner or Engineer or any of their officers, directors, members, partners, employees, agents, consultants, or subcontractors by any employee (or the survivor or personal representative of such employee) of Contractor, any Subcontractor, any Supplier, or any individual or entity directly or indirectly employed by any of them to perform any of the Work, or anyone for whose acts any of them may be liable, the indemnification obligation under Paragraph 7.18.A shall not be limited in any way by any limitation on the amount or type of damages, compensation, or benefits payable by or for Contractor or any such Subcontractor, Supplier, or other individual or entity under workers' compensation acts, disability benefit acts, or other employee benefit acts.

1. **Contractor specifically and expressly waives any immunity that may be granted it under workers' compensation acts, disability benefit acts, or other employee benefit acts in regard to 17.1.B above; provided Contractor's waiver of immunity by the provisions of this paragraph extends only to claims against Contractor by Indemnitees, and does not include, or extend to, any claims by Contractor's employees directly against Contractor.**

C. The indemnification obligations of Contractor under Paragraph 7.18.A shall not extend to the liability of Engineer and Engineer's officers, directors, members, partners, employees, agents, consultants and subcontractors arising out of:

1. the preparation or approval of, or the failure to prepare or approve maps, Drawings, opinions, reports, surveys, Change Orders, designs, or Specifications; or

2. giving directions or instructions, or failing to give them, if that is the primary cause of the injury or damage.

7.19 *Delegation of Professional Design Services*

A. Contractor will not be required to provide professional design services unless such services are specifically required by the Contract Documents for a portion of the Work or unless such services are required to carry out Contractor's responsibilities for construction means, methods, techniques, sequences and procedures. Contractor shall not be required to provide professional services in violation of applicable Laws and Regulations.

B. If professional design services or certifications by a design professional related to systems, materials, or equipment are specifically required of Contractor by the Contract Documents, Owner and Engineer will specify all performance and design criteria that such services must satisfy. Contractor shall cause such services or certifications to be provided by a properly licensed professional, whose signature and seal shall appear on all drawings, calculations, specifications, certifications, and other submittals prepared by such professional. Shop Drawings and other submittals related to the Work designed or certified by such professional, if prepared by others, shall bear such professional's written approval when submitted to Engineer.

C. Owner and Engineer shall be entitled to rely upon the adequacy, accuracy, and completeness of the services, certifications, or approvals performed by such design

Copyright © 2013 National Society of Professional Engineers, American Council of Engineering Companies, and American Society of Civil Engineers. All rights reserved.

professionals, provided Owner and Engineer have specified to Contractor all performance and design criteria that such services must satisfy.

D. Pursuant to this paragraph, Engineer's review and approval of design calculations and design drawings will be only for the limited purpose of checking for conformance with performance and design criteria given and the design concept expressed in the Contract Documents. Engineer's review and approval of Shop Drawings and other submittals (except design calculations and design drawings) will be only for the purpose stated in Paragraph 7.16.D.1.

E. Contractor shall not be responsible for the adequacy of the performance or design criteria specified by Owner or Engineer.

ARTICLE 8 – OTHER WORK AT THE SITE

8.01 *Other Work*

A. In addition to and apart from the Work under the Contract Documents, the Owner may perform other work at or adjacent to the Site. Such other work may be performed by Owner's employees, or through contracts between the Owner and third parties. Owner may also arrange to have third-party utility owners perform work on their utilities and facilities at or adjacent to the Site.

B. If Owner performs other work at or adjacent to the Site with Owner's employees, or through contracts for such other work, then Owner shall give Contractor written notice thereof prior to starting any such other work. If Owner has advance information regarding the start of any utility work at or adjacent to the Site, Owner shall provide such information to Contractor.

C. Contractor shall afford each other contractor that performs such other work, each utility owner performing other work, and Owner, if Owner is performing other work with Owner's employees, proper and safe access to the Site, and provide a reasonable opportunity for the introduction and storage of materials and equipment and the execution of such other work. Contractor shall do all cutting, fitting, and patching of the Work that may be required to properly connect or otherwise make its several parts come together and properly integrate with such other work. Contractor shall not endanger any work of others by cutting, excavating, or otherwise altering such work; provided, however, that Contractor may cut or alter others' work with the written consent of Engineer and the others whose work will be affected.

D. If the proper execution or results of any part of Contractor's Work depends upon work performed by others under this Article 8, Contractor shall inspect such other work and promptly report to Engineer in writing any delays, defects, or deficiencies in such other work that render it unavailable or unsuitable for the proper execution and results of Contractor's Work. Contractor's failure to so report will constitute an acceptance of such other work as fit and proper for integration with Contractor's Work except for latent defects and deficiencies in such other work.

8.02 *Coordination*

A. If Owner intends to contract with others for the performance of other work at or adjacent to the Site, to perform other work at or adjacent to the Site with Owner's employees, or to arrange to have utility owners perform work at or adjacent to the Site, the following will be set forth in the Supplementary Conditions or provided to Contractor prior to the start of any such other work:

Copyright © 2013 National Society of Professional Engineers, American Council of Engineering Companies, and American Society of Civil Engineers. All rights reserved.

1. the identity of the individual or entity that will have authority and responsibility for coordination of the activities among the various contractors;
2. an itemization of the specific matters to be covered by such authority and responsibility; and
3. the extent of such authority and responsibilities.

B. Unless otherwise provided in the Supplementary Conditions, Owner shall have sole authority and responsibility for such coordination.

8.03 *Legal Relationships*

A. If, in the course of performing other work at or adjacent to the Site for Owner, the Owner's employees, any other contractor working for Owner, or any utility owner causes damage to the Work or to the property of Contractor or its Subcontractors, or delays, disrupts, interferes with, or increases the scope or cost of the performance of the Work, through actions or inaction, then Contractor shall be entitled to an equitable adjustment in the Contract Price or the Contract Times, or both. Contractor must submit any Change Proposal seeking an equitable adjustment in the Contract Price or the Contract Times under this paragraph within 30 days of the damaging, delaying, disrupting, or interfering event. The entitlement to, and extent of, any such equitable adjustment shall take into account information (if any) regarding such other work that was provided to Contractor in the Contract Documents prior to the submittal of the Bid or the final negotiation of the terms of the Contract. When applicable, any such equitable adjustment in Contract Price shall be conditioned on Contractor assigning to Owner all Contractor's rights against such other contractor or utility owner with respect to the damage, delay, disruption, or interference that is the subject of the adjustment. Contractor's entitlement to an adjustment of the Contract Times is conditioned on such adjustment being essential to Contractor's ability to complete the Work within the Contract Times.

B. Contractor shall take reasonable and customary measures to avoid damaging, delaying, disrupting, or interfering with the work of Owner, any other contractor, or any utility owner performing other work at or adjacent to the Site. If Contractor fails to take such measures and as a result damages, delays, disrupts, or interferes with the work of any such other contractor or utility owner, then Owner may impose a set-off against payments due to Contractor, and assign to such other contractor or utility owner the Owner's contractual rights against Contractor with respect to the breach of the obligations set forth in this paragraph.

C. When Owner is performing other work at or adjacent to the Site with Owner's employees, Contractor shall be liable to Owner for damage to such other work, and for the reasonable direct delay, disruption, and interference costs incurred by Owner as a result of Contractor's failure to take reasonable and customary measures with respect to Owner's other work. In response to such damage, delay, disruption, or interference, Owner may impose a set-off against payments due to Contractor.

D. If Contractor damages, delays, disrupts, or interferes with the work of any other contractor, or any utility owner performing other work at or adjacent to the Site, through Contractor's failure to take reasonable and customary measures to avoid such impacts, or if any claim arising out of Contractor's actions, inactions, or negligence in performance of the Work at or adjacent to the Site is made by any such other contractor or utility owner against Contractor, Owner, or Engineer, then Contractor shall (1) promptly attempt to settle the claim as to all parties through negotiations with such other contractor or utility owner, or

Copyright © 2013 National Society of Professional Engineers, American Council of Engineering Companies, and American Society of Civil Engineers. All rights reserved.

otherwise resolve the claim by arbitration or other dispute resolution proceeding or at law, and (2) indemnify and hold harmless Owner and Engineer, and the officers, directors, members, partners, employees, agents, consultants and subcontractors of each and any of them from and against any such claims, and against all costs, losses, and damages (including but not limited to all fees and charges of engineers, architects, attorneys, and other professionals and all court or arbitration or other dispute resolution costs) arising out of or relating to such damage, delay, disruption, or interference.

ARTICLE 9 – OWNER'S RESPONSIBILITIES

9.01 *Communications to Contractor*

A. Except as otherwise provided in these General Conditions, Owner shall issue all communications to Contractor through Engineer.

9.02 *Replacement of Engineer*

A. Owner may at its discretion appoint an engineer to replace Engineer, provided Contractor makes no reasonable objection to the replacement engineer. The replacement engineer's status under the Contract Documents shall be that of the former Engineer.

9.03 *Furnish Data*

A. Owner shall promptly furnish the data required of Owner under the Contract Documents.

9.04 *Pay When Due*

A. Owner shall make payments to Contractor when they are due as provided in the Agreement.

9.05 *Lands and Easements; Reports, Tests, and Drawings*

A. Owner's duties with respect to providing lands and easements are set forth in Paragraph 5.01.

B. Owner's duties with respect to providing engineering surveys to establish reference points are set forth in Paragraph 4.03.

C. Article 5 refers to Owner's identifying and making available to Contractor copies of reports of explorations and tests of conditions at the Site, and drawings of physical conditions relating to existing surface or subsurface structures at the Site.

9.06 *Insurance*

A. Owner's responsibilities, if any, with respect to purchasing and maintaining liability and property insurance are set forth in Article 6.

9.07 *Change Orders*

A. Owner's responsibilities with respect to Change Orders are set forth in Article 11.

9.08 *Inspections, Tests, and Approvals*

A. Owner's responsibility with respect to certain inspections, tests, and approvals is set forth in Paragraph 14.02.B.

9.09 *Limitations on Owner's Responsibilities*

A. The Owner shall not supervise, direct, or have control or authority over, nor be responsible for, Contractor's means, methods, techniques, sequences, or procedures of construction, or the safety precautions and programs incident thereto, or for any failure of Contractor to

Copyright © 2013 National Society of Professional Engineers, American Council of Engineering Companies, and American Society of Civil Engineers. All rights reserved.

comply with Laws and Regulations applicable to the performance of the Work. Owner will not be responsible for Contractor's failure to perform the Work in accordance with the Contract Documents.

9.10 *Undisclosed Hazardous Environmental Condition*

A. Owner's responsibility in respect to an undisclosed Hazardous Environmental Condition is set forth in Paragraph 5.06.

9.11 *Evidence of Financial Arrangements*

A. Upon request of Contractor, Owner shall furnish Contractor reasonable evidence that financial arrangements have been made to satisfy Owner's obligations under the Contract Documents (including obligations under proposed changes in the Work).

9.12 *Safety Programs*

A. While at the Site, Owner's employees and representatives shall comply with the specific applicable requirements of Contractor's safety programs of which Owner has been informed.

B. Owner shall furnish copies of any applicable Owner safety programs to Contractor.

ARTICLE 10 – ENGINEER'S STATUS DURING CONSTRUCTION

10.01 *Owner's Representative*

A. Engineer will be Owner's representative during the construction period. The duties and responsibilities and the limitations of authority of Engineer as Owner's representative during construction are set forth in the Contract.

10.02 *Visits to Site*

A. Engineer will make visits to the Site at intervals appropriate to the various stages of construction as Engineer deems necessary in order to observe as an experienced and qualified design professional the progress that has been made and the quality of the various aspects of Contractor's executed Work. Based on information obtained during such visits and observations, Engineer, for the benefit of Owner, will determine, in general, if the Work is proceeding in accordance with the Contract Documents. Engineer will not be required to make exhaustive or continuous inspections on the Site to check the quality or quantity of the Work. Engineer's efforts will be directed toward providing for Owner a greater degree of confidence that the completed Work will conform generally to the Contract Documents. On the basis of such visits and observations, Engineer will keep Owner informed of the progress of the Work and will endeavor to guard Owner against defective Work.

B. Engineer's visits and observations are subject to all the limitations on Engineer's authority and responsibility set forth in Paragraph 10.08. Particularly, but without limitation, during or as a result of Engineer's visits or observations of Contractor's Work, Engineer will not supervise, direct, control, or have authority over or be responsible for Contractor's means, methods, techniques, sequences, or procedures of construction, or the safety precautions and programs incident thereto, or for any failure of Contractor to comply with Laws and Regulations applicable to the performance of the Work.

Copyright © 2013 National Society of Professional Engineers, American Council of Engineering Companies, and American Society of Civil Engineers. All rights reserved.

10.03 *Project Representative*

A. A Project Representative will also represent Engineer at the Site and assist Engineer in observing the progress and quality of the Work, then the authority and responsibilities of any such Project Representative will be as provided in the Supplementary Conditions, and limitations on the responsibilities thereof will be as provided in Paragraph 10.08. If Owner designates another representative or agent to represent Owner at the Site who is not Engineer's consultant, agent, or employee, the responsibilities and authority and limitations thereon of such other individual or entity will be as provided in the Supplementary Conditions.

10.04 *Rejecting Defective Work*

A. Engineer has the authority to reject Work in accordance with Article 14.

10.05 *Shop Drawings, Change Orders and Payments*

A. Engineer's authority, and limitations thereof, as to Shop Drawings and Samples, are set forth in Paragraph 7.16.

B. Engineer's authority, and limitations thereof, as to design calculations and design drawings submitted in response to a delegation of professional design services, if any, are set forth in Paragraph 7.19.

C. Engineer's authority as to Change Orders is set forth in Article 11.

D. Engineer's authority as to Applications for Payment is set forth in Article 15.

10.06 *Determinations for Unit Price Work*

A. Engineer will determine the actual quantities and classifications of Unit Price Work performed by Contractor as set forth in Paragraph 13.03.

10.07 *Decisions on Requirements of Contract Documents and Acceptability of Work*

A. Engineer will render decisions regarding the requirements of the Contract Documents, and judge the acceptability of the Work, pursuant to the specific procedures set forth herein for initial interpretations, Change Proposals, and acceptance of the Work. In rendering such decisions and judgments, Engineer will not show partiality to Owner or Contractor, and will not be liable to Owner, Contractor, or others in connection with any proceedings, interpretations, decisions, or judgments conducted or rendered in good faith.

10.08 *Limitations on Engineer's Authority and Responsibilities*

A. Neither Engineer's authority or responsibility under this Article 10 or under any other provision of the Contract, nor any decision made by Engineer in good faith either to exercise or not exercise such authority or responsibility or the undertaking, exercise, or performance of any authority or responsibility by Engineer, shall create, impose, or give rise to any duty in contract, tort, or otherwise owed by Engineer to Contractor, any Subcontractor, any Supplier, any other individual or entity, or to any surety for or employee or agent of any of them.

B. Engineer will not supervise, direct, control, or have authority over or be responsible for Contractor's means, methods, techniques, sequences, or procedures of construction, or the safety precautions and programs incident thereto, or for any failure of Contractor to comply with Laws and Regulations applicable to the performance of the Work. Engineer will not be responsible for Contractor's failure to perform the Work in accordance with the Contract Documents.

Copyright © 2013 National Society of Professional Engineers, American Council of Engineering Companies, and American Society of Civil Engineers. All rights reserved.

C. Engineer will not be responsible for the acts or omissions of Contractor or of any Subcontractor, any Supplier, or of any other individual or entity performing any of the Work.

D. Engineer's review of the final Application for Payment and accompanying documentation and all maintenance and operating instructions, schedules, guarantees, bonds, certificates of inspection, tests and approvals, and other documentation required to be delivered by Paragraph 15.06.A will only be to determine generally that their content complies with the requirements of, and in the case of certificates of inspections, tests, and approvals, that the results certified indicate compliance with the Contract Documents.

E. The limitations upon authority and responsibility set forth in this Paragraph 10.08 shall also apply to the Resident Project Representative, if any.

10.09 *Compliance with Safety Program*

A. While at the Site, Engineer's employees and representatives will comply with the specific applicable requirements of Owner's and Contractor's safety programs (if any) of which Engineer has been informed.

ARTICLE 11 – AMENDING THE CONTRACT DOCUMENTS; CHANGES IN THE WORK

11.01 *Amending and Supplementing Contract Documents*

A. The Contract Documents may be amended or supplemented by a Change Order, a Work Change Directive, or a Field Order.

1. *Change Orders*:

a. If an amendment or supplement to the Contract Documents includes a change in the Contract Price or the Contract Times, such amendment or supplement must be set forth in a Change Order. A Change Order also may be used to establish amendments and supplements of the Contract Documents that do not affect the Contract Price or Contract Times.

b. Owner and Contractor may amend those terms and conditions of the Contract Documents that do not involve (1) the performance or acceptability of the Work, (2) the design (as set forth in the Drawings, Specifications, or otherwise), or (3) other engineering or technical matters, without the recommendation of the Engineer. Such an amendment shall be set forth in a Change Order.

2. *Work Change Directives*: A Work Change Directive will not change the Contract Price or the Contract Times but is evidence that the parties expect that the modification ordered or documented by a Work Change Directive will be incorporated in a subsequently issued Change Order, following negotiations by the parties as to the Work Change Directive's effect, if any, on the Contract Price and Contract Times; or, if negotiations are unsuccessful, by a determination under the terms of the Contract Documents governing adjustments, expressly including Paragraph 11.04 regarding change of Contract Price. Contractor must submit any Change Proposal seeking an adjustment of the Contract Price or the Contract Times, or both, no later than 30 days after the completion of the Work set out in the Work Change Directive. Owner must submit any Claim seeking an adjustment of the Contract Price or the Contract Times, or both, no later than 60 days after issuance of the Work Change Directive.

3. *Field Orders*: Engineer may authorize minor changes in the Work if the changes do not involve an adjustment in the Contract Price or the Contract Times and are compatible

Copyright © 2013 National Society of Professional Engineers, American Council of Engineering Companies, and American Society of Civil Engineers. All rights reserved.

with the design concept of the completed Project as a functioning whole as indicated by the Contract Documents. Such changes will be accomplished by a Field Order and will be binding on Owner and also on Contractor, which shall perform the Work involved promptly. If Contractor believes that a Field Order justifies an adjustment in the Contract Price or Contract Times, or both, then before proceeding with the Work at issue, Contractor shall submit a Change Proposal as provided herein.

11.02 *Owner-Authorized Changes in the Work*

A. Without invalidating the Contract and without notice to any surety, Owner may, at any time or from time to time, order additions, deletions, or revisions in the Work. Such changes shall be supported by Engineer's recommendation, to the extent the change involves the design (as set forth in the Drawings, Specifications, or otherwise), or other engineering or technical matters. Such changes may be accomplished by a Change Order, if Owner and Contractor have agreed as to the effect, if any, of the changes on Contract Times or Contract Price; or by a Work Change Directive. Upon receipt of any such document, Contractor shall promptly proceed with the Work involved; or, in the case of a deletion in the Work, promptly cease construction activities with respect to such deleted Work. Added or revised Work shall be performed under the applicable conditions of the Contract Documents. Nothing in this paragraph shall obligate Contractor to undertake work that Contractor reasonably concludes cannot be performed in a manner consistent with Contractor's safety obligations under the Contract Documents or Laws and Regulations.

11.03 *Unauthorized Changes in the Work*

A. Contractor shall not be entitled to an increase in the Contract Price or an extension of the Contract Times with respect to any work performed that is not required by the Contract Documents, as amended, modified, or supplemented, except in the case of an emergency as provided in Paragraph 7.15 or in the case of uncovering Work as provided in Paragraph 14.05.

11.04 *Change of Contract Price*

A. The Contract Price may only be changed by a Change Order. Any Change Proposal for an adjustment in the Contract Price shall comply with the provisions of Paragraph 11.06. Any Claim for an adjustment of Contract Price shall comply with the provisions of Article 12.

B. An adjustment in the Contract Price will be determined as follows:

1. where the Work involved is covered by unit prices contained in the Contract Documents, then by application of such unit prices to the quantities of the items involved (subject to the provisions of Paragraph 13.03); or

2. where the Work involved is not covered by unit prices contained in the Contract Documents, then by a mutually agreed lump sum (which may include an allowance for overhead and profit not necessarily in accordance with Paragraph 11.04.C.2); or

3. where the Work involved is not covered by unit prices contained in the Contract Documents and the parties do not reach mutual agreement to a lump sum, then on the basis of the Cost of the Work (determined as provided in Paragraph 13.01) plus a Contractor's fee for overhead and profit (determined as provided in Paragraph 11.04.C).

C. *Contractor's Fee*: When applicable, the Contractor's fee for overhead and profit shall be determined as follows:

1. a mutually acceptable fixed fee; or

Copyright © 2013 National Society of Professional Engineers, American Council of Engineering Companies, and American Society of Civil Engineers. All rights reserved.

2. if a fixed fee is not agreed upon, then a fee based on the following percentages of the various portions of the Cost of the Work:

   a. for costs incurred under Paragraphs 13.01.B.1 and 13.01.B.2, the Contractor's fee shall be 15 percent;

   b. for costs incurred under Paragraph 13.01.B.3, the Contractor's fee shall be five percent;

   c. where one or more tiers of subcontracts are on the basis of Cost of the Work plus a fee and no fixed fee is agreed upon, the intent of Paragraphs 11.01.C.2.a and 11.01.C.2.b is that the Contractor's fee shall be based on: (1) a fee of 15 percent of the costs incurred under Paragraphs 13.01.A.1 and 13.01.A.2 by the Subcontractor that actually performs the Work, at whatever tier, and (2) with respect to Contractor itself and to any Subcontractors of a tier higher than that of the Subcontractor that actually performs the Work, a fee of five percent of the amount (fee plus underlying costs incurred) attributable to the next lower tier Subcontractor; provided, however, that for any such subcontracted work the maximum total fee to be paid by Owner shall be no greater than 27 percent of the costs incurred by the Subcontractor that actually performs the work;

   d. no fee shall be payable on the basis of costs itemized under Paragraphs 13.01.B.4, 13.01.B.5, and 13.01.C;

   e. the amount of credit to be allowed by Contractor to Owner for any change which results in a net decrease in cost will be the amount of the actual net decrease in cost plus a deduction in Contractor's fee by an amount equal to five percent of such net decrease; and

   f. when both additions and credits are involved in any one change, the adjustment in Contractor's fee shall be computed on the basis of the net change in accordance with Paragraphs 11.04.C.2.a through 11.04.C.2.e, inclusive.

11.05 *Change of Contract Times*

A. The Contract Times may only be changed by a Change Order. Any Change Proposal for an adjustment in the Contract Times shall comply with the provisions of Paragraph 11.06. Any Claim for an adjustment in the Contract Times shall comply with the provisions of Article 12.

B. An adjustment of the Contract Times shall be subject to the limitations set forth in Paragraph 4.05, concerning delays in Contractor's progress.

11.06 *Change Proposals*

A. Contractor shall submit a Change Proposal to Engineer to request an adjustment in the Contract Times or Contract Price; appeal an initial decision by Engineer concerning the requirements of the Contract Documents or relating to the acceptability of the Work under the Contract Documents; contest a set-off against payment due; or seek other relief under the Contract. The Change Proposal shall specify any proposed change in Contract Times or Contract Price, or both, or other proposed relief, and explain the reason for the proposed change, with citations to any governing or applicable provisions of the Contract Documents.

   1. *Procedures*: Contractor shall submit each Change Proposal to Engineer promptly (but in no event later than 30 days) after the start of the event giving rise thereto, or after such initial decision. The Contractor shall submit supporting data, including the proposed change in Contract Price or Contract Time (if any), to the Engineer and

Copyright © 2013 National Society of Professional Engineers, American Council of Engineering Companies, and American Society of Civil Engineers. All rights reserved.

Owner within 15 days after the submittal of the Change Proposal. The supporting data shall be accompanied by a written statement that the supporting data are accurate and complete, and that any requested time or price adjustment is the entire adjustment to which Contractor believes it is entitled as a result of said event. Engineer will advise Owner regarding the Change Proposal, and consider any comments or response from Owner regarding the Change Proposal.

2. *Engineer's Action*: Engineer will review each Change Proposal and, within 30 days after receipt of the Contractor's supporting data, either deny the Change Proposal in whole, approve it in whole, or deny it in part and approve it in part. Such actions shall be in writing, with a copy provided to Owner and Contractor. If Engineer does not take action on the Change Proposal within 30 days, then either Owner or Contractor may at any time thereafter submit a letter to the other party indicating that as a result of Engineer's inaction the Change Proposal is deemed denied, thereby commencing the time for appeal of the denial under Article 12.

3. *Binding Decision*: Engineer's decision will be final and binding upon Owner and Contractor, unless Owner or Contractor appeals the decision by filing a Claim under Article 12.

B. *Resolution of Certain Change Proposals*: If the Change Proposal does not involve the design (as set forth in the Drawings, Specifications, or otherwise), the acceptability of the Work, or other engineering or technical matters, then Engineer will notify the parties that the Engineer is unable to resolve the Change Proposal. For purposes of further resolution of such a Change Proposal, such notice shall be deemed a denial, and Contractor may choose to seek resolution under the terms of Article 12.

11.07 *Execution of Change Orders*

A. Owner and Contractor shall execute appropriate Change Orders covering:

1. changes in the Contract Price or Contract Times which are agreed to by the parties, including any undisputed sum or amount of time for Work actually performed in accordance with a Work Change Directive;

2. changes in Contract Price resulting from an Owner set-off, unless Contractor has duly contested such set-off;

3. changes in the Work which are: (a) ordered by Owner pursuant to Paragraph 11.02, (b) required because of Owner's acceptance of defective Work under Paragraph 14.04 or Owner's correction of defective Work under Paragraph 14.07, or (c) agreed to by the parties, subject to the need for Engineer's recommendation if the change in the Work involves the design (as set forth in the Drawings, Specifications, or otherwise), or other engineering or technical matters; and

4. changes in the Contract Price or Contract Times, or other changes, which embody the substance of any final and binding results under Paragraph 11.06, or Article 12.

B. If Owner or Contractor refuses to execute a Change Order that is required to be executed under the terms of this Paragraph 11.07, it shall be deemed to be of full force and effect, as if fully executed.

11.08 *Notification to Surety*

A. If the provisions of any bond require notice to be given to a surety of any change affecting the general scope of the Work or the provisions of the Contract Documents (including, but not limited to, Contract Price or Contract Times), the giving of any such notice will be

Copyright © 2013 National Society of Professional Engineers, American Council of Engineering Companies, and American Society of Civil Engineers. All rights reserved.

Contractor's responsibility. The amount of each applicable bond will be adjusted to reflect the effect of any such change.

ARTICLE 12 – CLAIMS

12.01 *Claims*

A. *Claims Process*: The following disputes between Owner and Contractor shall be submitted to the Claims process set forth in this Article:

1. Appeals by Owner or Contractor of Engineer's decisions regarding Change Proposals;
2. Owner demands for adjustments in the Contract Price or Contract Times, or other relief under the Contract Documents; and
3. Disputes that Engineer has been unable to address because they do not involve the design (as set forth in the Drawings, Specifications, or otherwise), the acceptability of the Work, or other engineering or technical matters.

B. *Submittal of Claim*: The party submitting a Claim shall deliver it directly to the other party to the Contract promptly (but in no event later than 30 days) after the start of the event giving rise thereto; in the case of appeals regarding Change Proposals within 30 days of the decision under appeal. The party submitting the Claim shall also furnish a copy to the Engineer, for its information only. The responsibility to substantiate a Claim shall rest with the party making the Claim. In the case of a Claim by Contractor seeking an increase in the Contract Times or Contract Price, or both, Contractor shall certify that the Claim is made in good faith, that the supporting data are accurate and complete, and that to the best of Contractor's knowledge and belief the amount of time or money requested accurately reflects the full amount to which Contractor is entitled.

C. *Review and Resolution*: The party receiving a Claim shall review it thoroughly, giving full consideration to its merits. The two parties shall seek to resolve the Claim through the exchange of information and direct negotiations. The parties may extend the time for resolving the Claim by mutual agreement. All actions taken on a Claim shall be stated in writing and submitted to the other party, with a copy to Engineer.

D. *Mediation*:

1. At any time after initiation of a Claim, Owner and Contractor may mutually agree to mediation of the underlying dispute. The agreement to mediate shall stay the Claim submittal and response process.
2. If Owner and Contractor agree to mediation, then after 60 days from such agreement, either Owner or Contractor may unilaterally terminate the mediation process, and the Claim submittal and decision process shall resume as of the date of the termination. If the mediation proceeds but is unsuccessful in resolving the dispute, the Claim submittal and decision process shall resume as of the date of the conclusion of the mediation, as determined by the mediator.
3. Owner and Contractor shall each pay one-half of the mediator's fees and costs.

E. *Partial Approval*: If the party receiving a Claim approves the Claim in part and denies it in part, such action shall be final and binding unless within 30 days of such action the other party invokes the procedure set forth in Article 17 for final resolution of disputes.

F. *Denial of Claim*: If efforts to resolve a Claim are not successful, the party receiving the Claim may deny it by giving written notice of denial to the other party. If the receiving party does

Copyright © 2013 National Society of Professional Engineers, American Council of Engineering Companies, and American Society of Civil Engineers. All rights reserved.

not take action on the Claim within 90 days, then either Owner or Contractor may at any time thereafter submit a letter to the other party indicating that as a result of the inaction, the Claim is deemed denied, thereby commencing the time for appeal of the denial. A denial of the Claim shall be final and binding unless within 30 days of the denial the other party invokes the procedure set forth in Article 17 for the final resolution of disputes.

G. *Final and Binding Results*: If the parties reach a mutual agreement regarding a Claim, whether through approval of the Claim, direct negotiations, mediation, or otherwise; or if a Claim is approved in part and denied in part, or denied in full, and such actions become final and binding; then the results of the agreement or action on the Claim shall be incorporated in a Change Order to the extent they affect the Contract, including the Work, the Contract Times, or the Contract Price.

ARTICLE 13 – COST OF THE WORK; ALLOWANCES; UNIT PRICE WORK

13.01 *Cost of the Work*

A. *Purposes for Determination of Cost of the Work*: The term Cost of the Work means the sum of all costs necessary for the proper performance of the Work at issue, as further defined below. The provisions of this Paragraph 13.01 are used for two distinct purposes:

1. To determine Cost of the Work when Cost of the Work is a component of the Contract Price, under cost-plus-fee, time-and-materials, or other cost-based terms; or

2. To determine the value of a Change Order, Change Proposal, Claim, set-off, or other adjustment in Contract Price. When the value of any such adjustment is determined on the basis of Cost of the Work, Contractor is entitled only to those additional or incremental costs required because of the change in the Work or because of the event giving rise to the adjustment.

B. *Costs Included*: Except as otherwise may be agreed to in writing by Owner, costs included in the Cost of the Work shall be in amounts no higher than those prevailing in the locality of the Project, shall not include any of the costs itemized in Paragraph 13.01.C, and shall include only the following items:

1. Payroll costs for employees in the direct employ of Contractor in the performance of the Work under schedules of job classifications agreed upon by Owner and Contractor. Such employees shall include, without limitation, superintendents, foremen, and other personnel employed full time on the Work. Payroll costs for employees not employed full time on the Work shall be apportioned on the basis of their time spent on the Work. Payroll costs shall include, but not be limited to, salaries and wages plus the cost of fringe benefits, which shall include social security contributions, unemployment, excise, and payroll taxes, workers' compensation, health and retirement benefits, bonuses, sick leave, and vacation and holiday pay applicable thereto. The expenses of performing Work outside of regular working hours, on Saturday, Sunday, or legal holidays, shall be included in the above to the extent authorized by Owner.

2. Cost of all materials and equipment furnished and incorporated in the Work, including costs of transportation and storage thereof, and Suppliers' field services required in connection therewith. All cash discounts shall accrue to Contractor unless Owner deposits funds with Contractor with which to make payments, in which case the cash discounts shall accrue to Owner. All trade discounts, rebates, and refunds and returns

Copyright © 2013 National Society of Professional Engineers, American Council of Engineering Companies, and American Society of Civil Engineers. All rights reserved.

from sale of surplus materials and equipment shall accrue to Owner, and Contractor shall make provisions so that they may be obtained.

3. Payments made by Contractor to Subcontractors for Work performed by Subcontractors. If required by Owner, Contractor shall obtain competitive bids from subcontractors acceptable to Owner and Contractor and shall deliver such bids to Owner, who will then determine, with the advice of Engineer, which bids, if any, will be acceptable. If any subcontract provides that the Subcontractor is to be paid on the basis of Cost of the Work plus a fee, the Subcontractor's Cost of the Work and fee shall be determined in the same manner as Contractor's Cost of the Work and fee as provided in this Paragraph 13.01.

4. Costs of special consultants (including but not limited to engineers, architects, testing laboratories, surveyors, attorneys, and accountants) employed for services specifically related to the Work.

5. Supplemental costs including the following:

   a. The proportion of necessary transportation, travel, and subsistence expenses of Contractor's employees incurred in discharge of duties connected with the Work.

   b. Cost, including transportation and maintenance, of all materials, supplies, equipment, machinery, appliances, office, and temporary facilities at the Site, and hand tools not owned by the workers, which are consumed in the performance of the Work, and cost, less market value, of such items used but not consumed which remain the property of Contractor.

   c. ~~Rentals of~~ **The cost for the use of** all construction equipment and machinery, and the parts thereof, **whether owned by the Contractor or** rented from Contractor or others **shall be calculated as follows and include the** ~~in accordance with rental agreements approved by Owner with the advice of Engineer, and the~~ costs of transportation, loading, unloading, assembly, dismantling, and removal thereof **for equipment involved only in the changed portion of the work covered under the Cost of the Work method**. **Transportation, loading and assembly costs will not be included for equipment already on the site which is being used for other portions of the Work. Hourly equipment and machinery rates shall be calculated from the Rental Rate Blue Book for Construction Equipment, and the equipment list submitted according to Paragraph 2.03 and 2.05 and as follows.** ~~All such costs shall be in accordance with the terms of said rental agreements.~~ The rental of any such equipment, machinery, or parts shall cease when the use thereof is no longer necessary for the Work.

      1) **For working equipment, the hourly rate shall be the monthly rental rate divided by 176 hours per month plus the hourly operating cost.**

      2) **For equipment on standby, the hourly rate shall be 50% of the monthly rental rate divided by 176 hours per month and the hourly operating cost shall not be applied.**

      3) **For specialized equipment rented for a short duration used for change order work or additional work not part of the scope of the Work bid, the equipment rental rate will be in accordance with the terms of a third party rental agreement or shall be negotiated prior to the work being performed.**

   d. Sales, consumer, use, and other similar taxes related to the Work, and for which Contractor is liable, as imposed by Laws and Regulations.

Copyright © 2013 National Society of Professional Engineers, American Council of Engineering Companies, and American Society of Civil Engineers. All rights reserved.

e. Deposits lost for causes other than negligence of Contractor, any Subcontractor, or anyone directly or indirectly employed by any of them or for whose acts any of them may be liable, and royalty payments and fees for permits and licenses.

f. Losses and damages (and related expenses) caused by damage to the Work, not compensated by insurance or otherwise, sustained by Contractor in connection with the performance of the Work (except losses and damages within the deductible amounts of property insurance established in accordance with Paragraph 6.05), provided such losses and damages have resulted from causes other than the negligence of Contractor, any Subcontractor, or anyone directly or indirectly employed by any of them or for whose acts any of them may be liable. Such losses shall include settlements made with the written consent and approval of Owner. No such losses, damages, and expenses shall be included in the Cost of the Work for the purpose of determining Contractor's fee.

g. The cost of utilities, fuel, and sanitary facilities at the Site.

h. Minor expenses such as communication service at the Site, express and courier services, and similar petty cash items in connection with the Work.

i. The costs of premiums for all bonds and insurance that Contractor is required by the Contract Documents to purchase and maintain.

C. *Costs Excluded*: The term Cost of the Work shall not include any of the following items:

1. Payroll costs and other compensation of Contractor's officers, executives, principals (of partnerships and sole proprietorships), general managers, safety managers, engineers, architects, estimators, attorneys, auditors, accountants, purchasing and contracting agents, expediters, timekeepers, clerks, and other personnel employed by Contractor, whether at the Site or in Contractor's principal or branch office for general administration of the Work and not specifically included in the agreed upon schedule of job classifications referred to in Paragraph 13.01.B.1 or specifically covered by Paragraph 13.01.B.4. The payroll costs and other compensation excluded here are to be considered administrative costs covered by the Contractor's fee.

2. Expenses of Contractor's principal and branch offices other than Contractor's office at the Site.

3. Any part of Contractor's capital expenses, including interest on Contractor's capital employed for the Work and charges against Contractor for delinquent payments.

4. Costs due to the negligence of Contractor, any Subcontractor, or anyone directly or indirectly employed by any of them or for whose acts any of them may be liable, including but not limited to, the correction of defective Work, disposal of materials or equipment wrongly supplied, and making good any damage to property.

5. Other overhead or general expense costs of any kind and the costs of any item not specifically and expressly included in Paragraph 13.01.B.

D. *Contractor's Fee*: When the Work as a whole is performed on the basis of cost-plus, Contractor's fee shall be determined as set forth in the Agreement. When the value of any Work covered by a Change Order, Change Proposal, Claim, set-off, or other adjustment in Contract Price is determined on the basis of Cost of the Work, Contractor's fee shall be determined as set forth in Paragraph 11.04.C.

E. *Documentation*: Whenever the Cost of the Work for any purpose is to be determined pursuant to this Article 13, Contractor will establish and maintain records thereof in

Copyright © 2013 National Society of Professional Engineers, American Council of Engineering Companies, and American Society of Civil Engineers. All rights reserved.

accordance with generally accepted accounting practices and submit in a form acceptable to Engineer an itemized cost breakdown together with supporting data.

13.02 *Allowances*

A. It is understood that Contractor has included in the Contract Price all allowances so named in the Contract Documents and shall cause the Work so covered to be performed for such sums and by such persons or entities as may be acceptable to Owner and Engineer.

B. *Cash Allowances*: Contractor agrees that:

1. the cash allowances include the cost to Contractor (less any applicable trade discounts) of materials and equipment required by the allowances to be delivered at the Site, and all applicable taxes; and

2. Contractor's costs for unloading and handling on the Site, labor, installation, overhead, profit, and other expenses contemplated for the cash allowances have been included in the Contract Price and not in the allowances, and no demand for additional payment on account of any of the foregoing will be valid.

C. *Contingency Allowance*: Contractor agrees that a contingency allowance, if any, is for the sole use of Owner to cover unanticipated costs.

D. Prior to final payment, an appropriate Change Order will be issued as recommended by Engineer to reflect actual amounts due Contractor on account of Work covered by allowances, and the Contract Price shall be correspondingly adjusted.

13.03 *Unit Price Work*

A. Where the Contract Documents provide that all or part of the Work is to be Unit Price Work, initially the Contract Price will be deemed to include for all Unit Price Work an amount equal to the sum of the unit price for each separately identified item of Unit Price Work times the estimated quantity of each item as indicated in the Agreement.

B. The estimated quantities of items of Unit Price Work are not guaranteed and are solely for the purpose of comparison of Bids and determining an initial Contract Price. Payments to Contractor for Unit Price Work will be based on actual quantities.

C. Each unit price will be deemed to include an amount considered by Contractor to be adequate to cover Contractor's overhead and profit for each separately identified item.

D. Engineer will determine the actual quantities and classifications of Unit Price Work performed by Contractor. Engineer will review with Contractor the Engineer's preliminary determinations on such matters before rendering a written decision thereon (by recommendation of an Application for Payment or otherwise). Engineer's written decision thereon will be final and binding (except as modified by Engineer to reflect changed factual conditions or more accurate data) upon Owner and Contractor, subject to the provisions of the following paragraph.

E. **The unit price of an item of Unit Price Work shall be subject to reevaluation and adjustment under the following conditions** ~~Within 30 days of Engineer's written decision under the preceding paragraph, Contractor may submit a Change Proposal, or Owner may file a Claim, seeking an adjustment in the Contract Price if~~:

1. **if the extended price of a particular item of Unit Price Work amounts to five percent (5%) or more of the Contract Price (based on estimated quantities at the time of Contract formation) and the variation in the quantity of that particular item of Unit Price Work actually furnished or performed by Contractor differs by more than**

Copyright © 2013 National Society of Professional Engineers, American Council of Engineering Companies, and American Society of Civil Engineers. All rights reserved.

twenty-five percent (25%) from the estimated quantity of such item indicated in the Agreement; and

2. there is no corresponding adjustment with respect to any other item of Work; and

3. Contractor believes that it is entitled to an increase in Contract Price as a result of having incurred additional expense or Owner believes that Owner is entitled to a decrease in Contract Price, and the parties are unable to agree as to the amount of any such increase or decrease.

ARTICLE 14 – TESTS AND INSPECTIONS; CORRECTION, REMOVAL OR ACCEPTANCE OF DEFECTIVE WORK

14.01 *Access to Work*

A. Owner, Engineer, their consultants and other representatives and personnel of Owner, independent testing laboratories, and authorities having jurisdiction will have access to the Site and the Work at reasonable times for their observation, inspection, and testing. Contractor shall provide them proper and safe conditions for such access and advise them of Contractor's safety procedures and programs so that they may comply therewith as applicable.

14.02 *Tests, Inspections, and Approvals*

A. Contractor shall give Engineer timely notice of readiness of the Work (or specific parts thereof) for all required inspections and tests, and shall cooperate with inspection and testing personnel to facilitate required inspections and tests.

B. Owner shall retain and pay for the services of an independent inspector, testing laboratory, or other qualified individual or entity to perform all inspections and tests expressly required by the Contract Documents to be furnished and paid for by Owner, except that costs incurred in connection with tests or inspections of covered Work shall be governed by the provisions of Paragraph 14.05.

C. If Laws or Regulations of any public body having jurisdiction require any Work (or part thereof) specifically to be inspected, tested, or approved by an employee or other representative of such public body, Contractor shall assume full responsibility for arranging and obtaining such inspections, tests, or approvals, pay all costs in connection therewith, and furnish Engineer the required certificates of inspection or approval.

D. Contractor shall be responsible for arranging, obtaining, and paying for all inspections and tests required:

1. by the Contract Documents, unless the Contract Documents expressly allocate responsibility for a specific inspection or test to Owner;

2. to attain Owner's and Engineer's acceptance of materials or equipment to be incorporated in the Work;

3. by manufacturers of equipment furnished under the Contract Documents;

4. for testing, adjusting, and balancing of mechanical, electrical, and other equipment to be incorporated into the Work; and

5. for acceptance of materials, mix designs, or equipment submitted for approval prior to Contractor's purchase thereof for incorporation in the Work.

Copyright © 2013 National Society of Professional Engineers, American Council of Engineering Companies, and American Society of Civil Engineers. All rights reserved.

Such inspections and tests shall be performed by independent inspectors, testing laboratories, or other qualified individuals or entities acceptable to Owner and Engineer.

E. If the Contract Documents require the Work (or part thereof) to be approved by Owner, Engineer, or another designated individual or entity, then Contractor shall assume full responsibility for arranging and obtaining such approvals.

F. If any Work (or the work of others) that is to be inspected, tested, or approved is covered by Contractor without written concurrence of Engineer, Contractor shall, if requested by Engineer, uncover such Work for observation. Such uncovering shall be at Contractor's expense unless Contractor had given Engineer timely notice of Contractor's intention to cover the same and Engineer had not acted with reasonable promptness in response to such notice.

14.03 *Defective Work*

A. *Contractor's Obligation*: It is Contractor's obligation to assure that the Work is not defective.

B. *Engineer's Authority*: Engineer has the authority to determine whether Work is defective, and to reject defective Work.

C. *Notice of Defects*: Prompt notice of all defective Work of which Owner or Engineer has actual knowledge will be given to Contractor.

D. *Correction, or Removal and Replacement*: Promptly after receipt of written notice of defective Work, Contractor shall correct all such defective Work, whether or not fabricated, installed, or completed, or, if Engineer has rejected the defective Work, remove it from the Project and replace it with Work that is not defective.

E. *Preservation of Warranties*: When correcting defective Work, Contractor shall take no action that would void or otherwise impair Owner's special warranty and guarantee, if any, on said Work.

F. *Costs and Damages*: In addition to its correction, removal, and replacement obligations with respect to defective Work, Contractor shall pay all claims, costs, losses, and damages arising out of or relating to defective Work, including but not limited to the cost of the inspection, testing, correction, removal, replacement, or reconstruction of such defective Work, fines levied against Owner by governmental authorities because the Work is defective, and the costs of repair or replacement of work of others resulting from defective Work. Prior to final payment, if Owner and Contractor are unable to agree as to the measure of such claims, costs, losses, and damages resulting from defective Work, then Owner may impose a reasonable set-off against payments due under Article 15.

14.04 *Acceptance of Defective Work*

A. If, instead of requiring correction or removal and replacement of defective Work, Owner prefers to accept it, Owner may do so (subject, if such acceptance occurs prior to final payment, to Engineer's confirmation that such acceptance is in general accord with the design intent and applicable engineering principles, and will not endanger public safety). Contractor shall pay all claims, costs, losses, and damages attributable to Owner's evaluation of and determination to accept such defective Work (such costs to be approved by Engineer as to reasonableness), and for the diminished value of the Work to the extent not otherwise paid by Contractor. If any such acceptance occurs prior to final payment, the necessary revisions in the Contract Documents with respect to the Work shall be incorporated in a Change Order. If the parties are unable to agree as to the decrease in the

Copyright © 2013 National Society of Professional Engineers, American Council of Engineering Companies, and American Society of Civil Engineers. All rights reserved.

Contract Price, reflecting the diminished value of Work so accepted, then Owner may impose a reasonable set-off against payments due under Article 15. If the acceptance of defective Work occurs after final payment, Contractor shall pay an appropriate amount to Owner.

14.05 *Uncovering Work*

A. Engineer has the authority to require special inspection or testing of the Work, whether or not the Work is fabricated, installed, or completed.

B. If any Work is covered contrary to the written request of Engineer, then Contractor shall, if requested by Engineer, uncover such Work for Engineer's observation, and then replace the covering, all at Contractor's expense.

C. If Engineer considers it necessary or advisable that covered Work be observed by Engineer or inspected or tested by others, then Contractor, at Engineer's request, shall uncover, expose, or otherwise make available for observation, inspection, or testing as Engineer may require, that portion of the Work in question, and provide all necessary labor, material, and equipment.

1. If it is found that the uncovered Work is defective, Contractor shall be responsible for all claims, costs, losses, and damages arising out of or relating to such uncovering, exposure, observation, inspection, and testing, and of satisfactory replacement or reconstruction (including but not limited to all costs of repair or replacement of work of others); and pending Contractor's full discharge of this responsibility the Owner shall be entitled to impose a reasonable set-off against payments due under Article 15.

2. If the uncovered Work is not found to be defective, Contractor shall be allowed an increase in the Contract Price or an extension of the Contract Times, or both, directly attributable to such uncovering, exposure, observation, inspection, testing, replacement, and reconstruction. If the parties are unable to agree as to the amount or extent thereof, then Contractor may submit a Change Proposal within 30 days of the determination that the Work is not defective.

14.06 *Owner May Stop the Work*

A. If the Work is defective, or Contractor fails to supply sufficient skilled workers or suitable materials or equipment, or fails to perform the Work in such a way that the completed Work will conform to the Contract Documents, then Owner may order Contractor to stop the Work, or any portion thereof, until the cause for such order has been eliminated; however, this right of Owner to stop the Work shall not give rise to any duty on the part of Owner to exercise this right for the benefit of Contractor, any Subcontractor, any Supplier, any other individual or entity, or any surety for, or employee or agent of any of them.

14.07 *Owner May Correct Defective Work*

A. If Contractor fails within a reasonable time after written notice from Engineer to correct defective Work, or to remove and replace rejected Work as required by Engineer, or if Contractor fails to perform the Work in accordance with the Contract Documents, or if Contractor fails to comply with any other provision of the Contract Documents, then Owner may, after seven days written notice to Contractor, correct or remedy any such deficiency.

B. In exercising the rights and remedies under this Paragraph 14.07, Owner shall proceed expeditiously. In connection with such corrective or remedial action, Owner may exclude Contractor from all or part of the Site, take possession of all or part of the Work and suspend Contractor's services related thereto, and incorporate in the Work all materials

Copyright © 2013 National Society of Professional Engineers, American Council of Engineering Companies, and American Society of Civil Engineers. All rights reserved.

and equipment stored at the Site or for which Owner has paid Contractor but which are stored elsewhere. Contractor shall allow Owner, Owner's representatives, agents and employees, Owner's other contractors, and Engineer and Engineer's consultants access to the Site to enable Owner to exercise the rights and remedies under this paragraph.

C. All claims, costs, losses, and damages incurred or sustained by Owner in exercising the rights and remedies under this Paragraph 14.07 will be charged against Contractor as set-offs against payments due under Article 15. Such claims, costs, losses and damages will include but not be limited to all costs of repair, or replacement of work of others destroyed or damaged by correction, removal, or replacement of Contractor's defective Work.

D. Contractor shall not be allowed an extension of the Contract Times because of any delay in the performance of the Work attributable to the exercise by Owner of Owner's rights and remedies under this Paragraph 14.07.

ARTICLE 15 – PAYMENTS TO CONTRACTOR; SET-OFFS; COMPLETION; CORRECTION PERIOD

15.01 *Progress Payments*

A. *Basis for Progress Payments*: The Schedule of Values established as provided in Article 2 will serve as the basis for progress payments and will be incorporated into a form of Application for Payment acceptable to Engineer. Progress payments on account of Unit Price Work will be based on the number of units completed during the pay period, as determined under the provisions of Paragraph 13.03. Progress payments for cost-based Work will be based on Cost of the Work completed by Contractor during the pay period.

B. *Applications for Payments*:

1. At least 20 days before the date established in the Agreement for each progress payment (but not more often than once a month), Contractor shall submit to Engineer for review an Application for Payment filled out and signed by Contractor covering the Work completed as of the date of the Application and accompanied by such supporting documentation as is required by the Contract Documents. If payment is requested on the basis of materials and equipment not incorporated in the Work but delivered and suitably stored at the Site or at another location agreed to in writing, the Application for Payment shall also be accompanied by a bill of sale, invoice, or other documentation warranting that Owner has received the materials and equipment free and clear of all Liens, and evidence that the materials and equipment are covered by appropriate property insurance, a warehouse bond, or other arrangements to protect Owner's interest therein, all of which must be satisfactory to Owner. **Payment for materials in storage shall be based on the actual cost of the materials and equipment to Contactor and shall not include any overhead or profit. Documentation warranting Owner has received the materials and equipment free and clear of all Liens will be waived for the material in storage included in the first progress payment. However, proof of payment and clear title must be submitted with Application No. 2 for all material included in Application No. 1. Without such documentation amounts paid per Application No. 1 for materials in storage will be deducted from Application No 2. Beginning with the second application, all payment for materials in storage will require documentation warranting that Owner is receiving the materials free and clear of all liens.**

2. Beginning with the second Application for Payment, each Application shall include an affidavit of Contractor stating that all previous progress payments received on account

Copyright © 2013 National Society of Professional Engineers, American Council of Engineering Companies, and American Society of Civil Engineers. All rights reserved.

of the Work have been applied on account to discharge Contractor's legitimate obligations associated with prior Applications for Payment.

3. The amount of retainage with respect to progress payments will be as stipulated in the Agreement. **Retainage may be used by Owner to offset costs for any of the losses enumerated in Paragraphs 15.01.C.6.a through 15.01.C.6.e inclusive, 15.01.E.1.a through 15.01.E.1.l inclusive or 16.02.E. In additions retainage may be used by the Owner to protect against loss from failure of the Contractor to complete necessary work and to offset any liquidated damages due Owner.**

   No payments will be made that would deplete the retainage, place in escrow any funds that are required for retainage, or invest retainage for the benefit of the Contractor.

4. **Each Application for Payment shall be accompanied by Contractor's updated progress schedule, shop drawing schedule, procurement schedule, and other data specified herein. Owner reserves the right to required submission of certified payroll records by the Contractor.**

C. *Review of Applications*:

1. Engineer will, within 10 days after receipt of each Application for Payment, including each resubmittal, either indicate in writing a recommendation of payment and present the Application to Owner, or return the Application to Contractor indicating in writing Engineer's reasons for refusing to recommend payment. In the latter case, Contractor may make the necessary corrections and resubmit the Application.

2. Engineer's recommendation of any payment requested in an Application for Payment will constitute a representation by Engineer to Owner, based on Engineer's observations of the executed Work as an experienced and qualified design professional, and on Engineer's review of the Application for Payment and the accompanying data and schedules, that to the best of Engineer's knowledge, information and belief:

   a. the Work has progressed to the point indicated;

   b. the quality of the Work is generally in accordance with the Contract Documents (subject to an evaluation of the Work as a functioning whole prior to or upon Substantial Completion, the results of any subsequent tests called for in the Contract Documents, a final determination of quantities and classifications for Unit Price Work under Paragraph 13.03, and any other qualifications stated in the recommendation); and

   c. the conditions precedent to Contractor's being entitled to such payment appear to have been fulfilled in so far as it is Engineer's responsibility to observe the Work.

3. By recommending any such payment Engineer will not thereby be deemed to have represented that:

   a. inspections made to check the quality or the quantity of the Work as it has been performed have been exhaustive, extended to every aspect of the Work in progress, or involved detailed inspections of the Work beyond the responsibilities specifically assigned to Engineer in the Contract; or

Copyright © 2013 National Society of Professional Engineers, American Council of Engineering Companies, and American Society of Civil Engineers. All rights reserved.

b. there may not be other matters or issues between the parties that might entitle Contractor to be paid additionally by Owner or entitle Owner to withhold payment to Contractor.

4. Neither Engineer's review of Contractor's Work for the purposes of recommending payments nor Engineer's recommendation of any payment, including final payment, will impose responsibility on Engineer:

   a. to supervise, direct, or control the Work, or

   b. for the means, methods, techniques, sequences, or procedures of construction, or the safety precautions and programs incident thereto, or

   c. for Contractor's failure to comply with Laws and Regulations applicable to Contractor's performance of the Work, or

   d. to make any examination to ascertain how or for what purposes Contractor has used the money paid on account of the Contract Price, or

   e. to determine that title to any of the Work, materials, or equipment has passed to Owner free and clear of any Liens.

5. Engineer may refuse to recommend the whole or any part of any payment if, in Engineer's opinion, it would be incorrect to make the representations to Owner stated in Paragraph 15.01.C.2.

6. Engineer will recommend reductions in payment (set-offs) necessary in Engineer's opinion to protect Owner from loss because:

   a. the Work is defective, requiring correction or replacement;

   b. the Contract Price has been reduced by Change Orders;

   c. Owner has been required to correct defective Work in accordance with Paragraph 14.07, or has accepted defective Work pursuant to Paragraph 14.04;

   d. Owner has been required to remove or remediate a Hazardous Environmental Condition for which Contractor is responsible; or

   e. Engineer has actual knowledge of the occurrence of any of the events that would constitute a default by Contractor and therefore justify termination for cause under the Contract Documents.

D. *Payment Becomes Due*:

~~1.~~ **The Application for Payment with Engineer's recommendations will be presented to the Owner and Agency (if applicable) for consideration. If both Owner and Agency find the Application for Payment acceptable, the recommended amount less any reduction under the provision of Paragraph 15.01.E will become due twenty (20) days after the Application for Payment is presented to the Owner, and the Owner will make payment to the Contractor.** ~~Ten days after presentation of the Application for Payment to Owner with Engineer's recommendation, the amount recommended (subject to any Owner set-offs) will become due, and when due will be paid by Owner to Contractor.~~

Copyright © 2013 National Society of Professional Engineers, American Council of Engineering Companies, and American Society of Civil Engineers. All rights reserved.

E. *Reductions in Payment by Owner*:

1. In addition to any reductions in payment (set-offs) recommended by Engineer, Owner is entitled to impose a set-off against payment based on any of the following:

    a. claims have been made against Owner on account of Contractor's conduct in the performance or furnishing of the Work, or Owner has incurred costs, losses, or damages on account of Contractor's conduct in the performance or furnishing of the Work, including but not limited to claims, costs, losses, or damages from workplace injuries, adjacent property damage, non-compliance with Laws and Regulations, and patent infringement;

    b. Contractor has failed to take reasonable and customary measures to avoid damage, delay, disruption, and interference with other work at or adjacent to the Site;

    c. Contractor has failed to provide and maintain required bonds or insurance;

    d. Owner has been required to remove or remediate a Hazardous Environmental Condition for which Contractor is responsible;

    e. Owner has incurred extra charges or engineering costs related to submittal reviews, evaluations of proposed substitutes, tests and inspections, or return visits to manufacturing or assembly facilities;

    f. the Work is defective, requiring correction or replacement;

    g. Owner has been required to correct defective Work in accordance with Paragraph 14.07, or has accepted defective Work pursuant to Paragraph 14.04;

    h. the Contract Price has been reduced by Change Orders;

    i. an event that would constitute a default by Contractor and therefore justify a termination for cause has occurred;

    j. liquidated damages have accrued as a result of Contractor's failure to achieve Milestones, Substantial Completion, or final completion of the Work;

    k. Liens have been filed in connection with the Work, except where Contractor has delivered a specific bond satisfactory to Owner to secure the satisfaction and discharge of such Liens;

    l. there are other items entitling Owner to a set off against the amount recommended.

2. If Owner imposes any set-off against payment, whether based on its own knowledge or on the written recommendations of Engineer, Owner will give Contractor immediate written notice (with a copy to Engineer) stating the reasons for such action and the specific amount of the reduction, and promptly pay Contractor any amount remaining after deduction of the amount so withheld. Owner shall promptly pay Contractor the amount so withheld, or any adjustment thereto agreed to by Owner and Contractor, if Contractor remedies the reasons for such action. The reduction imposed shall be binding on Contractor unless it duly submits a Change Proposal contesting the reduction.

3. Upon a subsequent determination that Owner's refusal of payment was not justified, the amount wrongfully withheld shall be treated as an amount due as determined by Paragraph 15.01.C.1 and subject to interest as provided in the Agreement.

Copyright © 2013 National Society of Professional Engineers, American Council of Engineering Companies, and American Society of Civil Engineers. All rights reserved.

15.02 *Contractor's Warranty of Title*

A. Contractor warrants and guarantees that title to all Work, materials, and equipment furnished under the Contract will pass to Owner free and clear of (1) all Liens and other title defects, and (2) all patent, licensing, copyright, or royalty obligations, no later than seven days after the time of payment by Owner.

15.03 *Substantial Completion*

A. When Contractor considers the entire Work ready for its intended use Contractor shall notify Owner and Engineer in writing that the entire Work is substantially complete and request that Engineer issue a certificate of Substantial Completion. Contractor shall at the same time submit to Owner and Engineer an initial draft of punch list items to be completed or corrected before final payment.

B. Promptly after Contractor's notification, Owner, Contractor, and Engineer shall make an inspection of the Work to determine the status of completion. If Engineer **or Owner** does not consider the Work substantially complete, Engineer will notify Contractor in writing giving the reasons therefor. **Contractor shall immediately correct the deficiencies and re-notify the Engineer in writing that the Work is substantially complete.**

C. If Engineer considers the Work substantially complete, Engineer will deliver to Owner a preliminary certificate of Substantial Completion which shall fix the date of Substantial Completion. Engineer shall attach to the certificate a punch list of items to be completed or corrected before final payment. Owner shall have seven days after receipt of the preliminary certificate during which to make written objection to Engineer as to any provisions of the certificate or attached punch list. If, after considering the objections to the provisions of the preliminary certificate, Engineer concludes that the Work is not substantially complete, Engineer will, within 14 days after submission of the preliminary certificate to Owner, notify Contractor in writing that the Work is not substantially complete, stating the reasons therefor. If Owner does not object to the provisions of the certificate, or if despite consideration of Owner's objections Engineer concludes that the Work is substantially complete, then Engineer will, within said 14 days, execute and deliver to Owner and Contractor a final certificate of Substantial Completion (with a revised punch list of items to be completed or corrected) reflecting such changes from the preliminary certificate as Engineer believes justified after consideration of any objections from Owner.

D. At the time of receipt of the preliminary certificate of Substantial Completion, Owner and Contractor will confer regarding Owner's use or occupancy of the Work following Substantial Completion, review the builder's risk insurance policy with respect to the end of the builder's risk coverage, and confirm the transition to coverage of the Work under a permanent property insurance policy held by Owner. Unless Owner and Contractor agree otherwise in writing, Owner shall bear responsibility for security, operation, protection of the Work, property insurance, maintenance, heat, and utilities upon Owner's use or occupancy of the Work.

E. After Substantial Completion the Contractor shall promptly begin work on the punch list of items to be completed or corrected prior to final payment. In appropriate cases Contractor may submit monthly Applications for Payment for completed punch list items, following the progress payment procedures set forth above.

F. Owner shall have the right to exclude Contractor from the Site after the date of Substantial Completion subject to allowing Contractor reasonable access to remove its property and complete or correct items on the punch list.

Copyright © 2013 National Society of Professional Engineers, American Council of Engineering Companies, and American Society of Civil Engineers. All rights reserved.

15.04 *Partial Use or Occupancy*

A. Prior to Substantial Completion of all the Work, Owner may use or occupy any substantially completed part of the Work which has specifically been identified in the Contract Documents, or which Owner, Engineer, and Contractor agree constitutes a separately functioning and usable part of the Work that can be used by Owner for its intended purpose without significant interference with Contractor's performance of the remainder of the Work, subject to the following conditions:

1. At any time Owner may request in writing that Contractor permit Owner to use or occupy any such part of the Work that Owner believes to be substantially complete. If and when Contractor agrees that such part of the Work is substantially complete, Contractor, Owner, and Engineer will follow the procedures of Paragraph 15.03.A through E for that part of the Work.

2. At any time Contractor may notify Owner and Engineer in writing that Contractor considers any such part of the Work substantially complete and request Engineer to issue a certificate of Substantial Completion for that part of the Work.

3. Within a reasonable time after either such request, Owner, Contractor, and Engineer shall make an inspection of that part of the Work to determine its status of completion. If Engineer does not consider that part of the Work to be substantially complete, Engineer will notify Owner and Contractor in writing giving the reasons therefor. If Engineer considers that part of the Work to be substantially complete, the provisions of Paragraph 15.03 will apply with respect to certification of Substantial Completion of that part of the Work and the division of responsibility in respect thereof and access thereto.

4. No use or occupancy or separate operation of part of the Work may occur prior to compliance with the requirements of Paragraph 6.05 regarding builder's risk or other property insurance.

15.05 *Final Inspection*

A. Upon written notice from Contractor that the entire Work or an agreed portion thereof is complete, Engineer will promptly make a final inspection with Owner and Contractor and will notify Contractor in writing of all particulars in which this inspection reveals that the Work, or agreed portion thereof, is incomplete or defective. Contractor shall immediately take such measures as are necessary to complete such Work or remedy such deficiencies.

15.06 *Final Payment*

A. *Application for Payment*:

1. After Contractor has, in the opinion of Engineer **and Owner**, satisfactorily completed all corrections identified during the final inspection and has delivered, in accordance with the Contract Documents, all maintenance and operating instructions, schedules, guarantees, bonds, certificates or other evidence of insurance, certificates of inspection, annotated record documents (as provided in Paragraph 7.11), and other documents, Contractor may make application for final payment.

2. The final Application for Payment shall be accompanied (except as previously delivered) by:

a. all documentation called for in the Contract Documents;

b. consent of the surety, if any, to final payment;

Copyright © 2013 National Society of Professional Engineers, American Council of Engineering Companies, and American Society of Civil Engineers. All rights reserved.

c. satisfactory evidence that all title issues have been resolved such that title to all Work, materials, and equipment has passed to Owner free and clear of any Liens or other title defects, or will so pass upon final payment.

d. a list of all disputes that Contractor believes are unsettled; and

e. complete and legally effective releases or waivers (satisfactory to Owner) of all Lien rights arising out of the Work, and of Liens filed in connection with the Work.

f. **Record documents; and**

3. In lieu of the releases or waivers of Liens specified in Paragraph 15.06.A.2 and as approved by Owner, Contractor may furnish receipts or releases in full and an affidavit of Contractor that: (a) the releases and receipts include all labor, services, material, and equipment for which a Lien could be filed; and (b) all payrolls, material and equipment bills, and other indebtedness connected with the Work for which Owner might in any way be responsible, or which might in any way result in liens or other burdens on Owner's property, have been paid or otherwise satisfied. If any Subcontractor or Supplier fails to furnish such a release or receipt in full, Contractor may furnish a bond or other collateral satisfactory to Owner to indemnify Owner against any Lien, or Owner at its option may issue joint checks payable to Contractor and specified Subcontractors and Suppliers.

B. *Engineer's Review of Application and Acceptance*:

1. If, on the basis of Engineer's observation of the Work during construction and final inspection, and Engineer's review of the final Application for Payment and accompanying documentation as required by the Contract Documents, Engineer is satisfied that the Work has been completed and Contractor's other obligations under the Contract have been fulfilled, Engineer will, within ten days after receipt of the final Application for Payment, indicate in writing Engineer's recommendation of final payment and present the Application for Payment to Owner for payment. Such recommendation shall account for any set-offs against payment that are necessary in Engineer's opinion to protect Owner from loss for the reasons stated above with respect to progress payments. At the same time Engineer will also give written notice to Owner and Contractor that the Work is acceptable, subject to the provisions of Paragraph 15.07. Otherwise, Engineer will return the Application for Payment to Contractor, indicating in writing the reasons for refusing to recommend final payment, in which case Contractor shall make the necessary corrections and resubmit the Application for Payment.

C. *Completion of Work*: The Work is complete (subject to surviving obligations) when it is ready for final payment as established by the Engineer's written recommendation of final payment.

D. *Payment Becomes Due*: Thirty days after the presentation to Owner of the final Application for Payment and accompanying documentation, the amount recommended by Engineer (less any further sum Owner is entitled to set off against Engineer's recommendation, including but not limited to set-offs for liquidated damages and set-offs allowed under the provisions above with respect to progress payments) will become due and shall be paid by Owner to Contractor.

15.07 *Waiver of Claims*

A. The making of final payment will not constitute a waiver by Owner of claims or rights against Contractor. Owner expressly reserves claims and rights arising from unsettled Liens,

Copyright © 2013 National Society of Professional Engineers, American Council of Engineering Companies, and American Society of Civil Engineers. All rights reserved.

from defective Work appearing after final inspection pursuant to Paragraph 15.05, from Contractor's failure to comply with the Contract Documents or the terms of any special guarantees specified therein, from outstanding Claims by Owner, or from Contractor's continuing obligations under the Contract Documents.

B. The acceptance of final payment by Contractor will constitute a waiver by Contractor of all claims and rights against Owner other than those pending matters that have been duly submitted or appealed under the provisions of Article 17.

15.08 *Correction Period*

A. If within one year after the date of Substantial Completion (or such longer period of time as may be prescribed by the terms of any applicable special guarantee required by the Contract Documents, or by any specific provision of the Contract Documents), any Work is found to be defective, or if the repair of any damages to the Site, adjacent areas that Contractor has arranged to use through construction easements or otherwise, and other adjacent areas used by Contractor as permitted by Laws and Regulations, is found to be defective, then Contractor shall promptly, without cost to Owner and in accordance with Owner's written instructions:

1. correct the defective repairs to the Site or such other adjacent areas;
2. correct such defective Work;
3. if the defective Work has been rejected by Owner, remove it from the Project and replace it with Work that is not defective, and
4. satisfactorily correct or repair or remove and replace any damage to other Work, to the work of others, or to other land or areas resulting therefrom.

B. If Contractor does not promptly comply with the terms of Owner's written instructions, or in an emergency where delay would cause serious risk of loss or damage, Owner may have the defective Work corrected or repaired or may have the rejected Work removed and replaced. Contractor shall pay all claims, costs, losses, and damages (including but not limited to all fees and charges of engineers, architects, attorneys, and other professionals and all court or arbitration or other dispute resolution costs) arising out of or relating to such correction or repair or such removal and replacement (including but not limited to all costs of repair or replacement of work of others).

C. In special circumstances where a particular item of equipment is placed in continuous service before Substantial Completion of all the Work, the correction period for that item may start to run from an earlier date if so provided in the Specifications.

D. Where defective Work (and damage to other Work resulting therefrom) has been corrected or removed and replaced under this paragraph, the correction period hereunder with respect to such Work will be extended for an additional period of one year after such correction or removal and replacement has been satisfactorily completed.

E. Contractor's obligations under this paragraph are in addition to all other obligations and warranties. The provisions of this paragraph shall not be construed as a substitute for, or a waiver of, the provisions of any applicable statute of limitation or repose.

Copyright © 2013 National Society of Professional Engineers, American Council of Engineering Companies, and American Society of Civil Engineers. All rights reserved.

ARTICLE 16 – SUSPENSION OF WORK AND TERMINATION

16.01 *Owner May Suspend Work*

A. At any time and without cause, Owner may suspend the Work or any portion thereof for a period of not more than 90 consecutive days by written notice to Contractor and Engineer. Such notice will fix the date on which Work will be resumed. Contractor shall resume the Work on the date so fixed. Contractor shall be entitled to an adjustment in the Contract Price or an extension of the Contract Times, or both, directly attributable to any such suspension. Any Change Proposal seeking such adjustments shall be submitted no later than 30 days after the date fixed for resumption of Work.

16.02 *Owner May Terminate for Cause*

A. The occurrence of any one or more of the following events will constitute a default by Contractor and justify termination for cause:

1. Contractor's persistent failure to perform the Work in accordance with the Contract Documents (including, but not limited to, failure to supply sufficient skilled workers or suitable materials or equipment or failure to adhere to the Progress Schedule);

2. Failure of Contractor to perform or otherwise to comply with a material term of the Contract Documents;

3. Contractor's disregard of Laws or Regulations of any public body having jurisdiction; or

4. Contractor's repeated disregard of the authority of Owner or Engineer.

B. If one or more of the events identified in Paragraph 16.02.A occurs, then after giving Contractor (and any surety) ten days written notice that Owner is considering a declaration that Contractor is in default and termination of the contract, Owner may proceed to:

1. declare Contractor to be in default, and give Contractor (and any surety) notice that the Contract is terminated; and

2. enforce the rights available to Owner under any applicable performance bond.

C. Subject to the terms and operation of any applicable performance bond, if Owner has terminated the Contract for cause, Owner may exclude Contractor from the Site, take possession of the Work, incorporate in the Work all materials and equipment stored at the Site or for which Owner has paid Contractor but which are stored elsewhere, and complete the Work as Owner may deem expedient.

D. Owner may not proceed with termination of the Contract under Paragraph 16.02.B if Contractor within seven days of receipt of notice of intent to terminate begins to correct its failure to perform and proceeds diligently to cure such failure.

E. If Owner proceeds as provided in Paragraph 16.02.B, Contractor shall not be entitled to receive any further payment until the Work is completed. If the unpaid balance of the Contract Price exceeds the cost to complete the Work, including all related claims, costs, losses, and damages (including but not limited to all fees and charges of engineers, architects, attorneys, and other professionals) sustained by Owner, such excess will be paid to Contractor. If the cost to complete the Work including such related claims, costs, losses, and damages exceeds such unpaid balance, Contractor shall pay the difference to Owner. Such claims, costs, losses, and damages incurred by Owner will be reviewed by Engineer as to their reasonableness and, when so approved by Engineer, incorporated in a Change

Copyright © 2013 National Society of Professional Engineers, American Council of Engineering Companies, and American Society of Civil Engineers. All rights reserved.

Order. When exercising any rights or remedies under this paragraph, Owner shall not be required to obtain the lowest price for the Work performed.

F. Where Contractor's services have been so terminated by Owner, the termination will not affect any rights or remedies of Owner against Contractor then existing or which may thereafter accrue, or any rights or remedies of Owner against Contractor or any surety under any payment bond or performance bond. Any retention or payment of money due Contractor by Owner will not release Contractor from liability.

G. If and to the extent that Contractor has provided a performance bond under the provisions of Paragraph 6.01.A, the provisions of that bond shall govern over any inconsistent provisions of Paragraphs 16.02.B and 16.02.D.

16.03 *Owner May Terminate For Convenience*

A. Upon seven days written notice to Contractor and Engineer, Owner may, without cause and without prejudice to any other right or remedy of Owner, terminate the Contract. In such case, Contractor shall be paid for (without duplication of any items):

1. completed and acceptable Work executed in accordance with the Contract Documents prior to the effective date of termination, including fair and reasonable sums for overhead and profit on such Work;

2. expenses sustained prior to the effective date of termination in performing services and furnishing labor, materials, or equipment as required by the Contract Documents in connection with uncompleted Work, plus fair and reasonable sums for overhead and profit on such expenses; and

3. other reasonable expenses directly attributable to termination, including costs incurred to prepare a termination for convenience cost proposal.

B. Contractor shall not be paid on account of loss of anticipated overhead, profits, or revenue, or other economic loss arising out of or resulting from such termination.

16.04 *Contractor May Stop Work or Terminate*

A. If, through no act or fault of Contractor, (1) the Work is suspended for more than 90 consecutive days by Owner or under an order of court or other public authority, or (2) Engineer fails to act on any Application for Payment within 30 days after it is submitted, or (3) Owner fails for 30 days to pay Contractor any sum finally determined to be due, then Contractor may, upon seven days written notice to Owner and Engineer, and provided Owner or Engineer do not remedy such suspension or failure within that time, terminate the contract and recover from Owner payment on the same terms as provided in Paragraph 16.03.

B. In lieu of terminating the Contract and without prejudice to any other right or remedy, if Engineer has failed to act on an Application for Payment within 30 days after it is submitted, or Owner has failed for 30 days to pay Contractor any sum finally determined to be due, Contractor may, seven days after written notice to Owner and Engineer, stop the Work until payment is made of all such amounts due Contractor, including interest thereon. The provisions of this paragraph are not intended to preclude Contractor from submitting a Change Proposal for an adjustment in Contract Price or Contract Times or otherwise for expenses or damage directly attributable to Contractor's stopping the Work as permitted by this paragraph.

Copyright © 2013 National Society of Professional Engineers, American Council of Engineering Companies, and American Society of Civil Engineers. All rights reserved.

ARTICLE 17 – FINAL RESOLUTION OF DISPUTES

17.01 *Methods and Procedures*

A. *Disputes Subject to Final Resolution*: The following disputed matters are subject to final resolution under the provisions of this Article:

1. A timely appeal of an approval in part and denial in part of a Claim, or of a denial in full; and

2. Disputes between Owner and Contractor concerning the Work or obligations under the Contract Documents, and arising after final payment has been made.

B. *Final Resolution of Disputes*: For any dispute subject to resolution under this Article, Owner or Contractor may:

1. elect in writing to invoke the dispute resolution process provided for in the Supplementary Conditions; or

2. agree with the other party to submit the dispute to another dispute resolution process; or

3. if no dispute resolution process is provided for in the Supplementary Conditions or mutually agreed to, give written notice to the other party of the intent to submit the dispute to a court of competent jurisdiction.

ARTICLE 18 – MISCELLANEOUS

18.01 *Giving Notice*

A. Whenever any provision of the Contract Documents requires the giving of written notice, it will be deemed to have been validly given if:

1. delivered in person, by a commercial courier service or otherwise, to the individual or to a member of the firm or to an officer of the corporation for which it is intended; or

2. delivered at or sent by registered or certified mail, postage prepaid, to the last business address known to the sender of the notice.

18.02 *Computation of Times*

A. When any period of time is referred to in the Contract by days, it will be computed to exclude the first and include the last day of such period. If the last day of any such period falls on a Saturday or Sunday or on a day made a legal holiday by the law of the applicable jurisdiction, such day will be omitted from the computation.

18.03 *Cumulative Remedies*

A. The duties and obligations imposed by these General Conditions and the rights and remedies available hereunder to the parties hereto are in addition to, and are not to be construed in any way as a limitation of, any rights and remedies available to any or all of them which are otherwise imposed or available by Laws or Regulations, by special warranty or guarantee, or by other provisions of the Contract. The provisions of this paragraph will be as effective as if repeated specifically in the Contract Documents in connection with each particular duty, obligation, right, and remedy to which they apply.

Copyright © 2013 National Society of Professional Engineers, American Council of Engineering Companies, and American Society of Civil Engineers. All rights reserved.

18.04 *Limitation of Damages*

A. With respect to any and all Change Proposals, Claims, disputes subject to final resolution, and other matters at issue, neither Owner nor Engineer, nor any of their officers, directors, members, partners, employees, agents, consultants, or subcontractors, shall be liable to Contractor for any claims, costs, losses, or damages sustained by Contractor on or in connection with any other project or anticipated project.

18.05 *No Waiver*

A. A party's non-enforcement of any provision shall not constitute a waiver of that provision, nor shall it affect the enforceability of that provision or of the remainder of this Contract.

18.06 *Survival of Obligations*

A. All representations, indemnifications, warranties, and guarantees made in, required by, or given in accordance with the Contract, as well as all continuing obligations indicated in the Contract, will survive final payment, completion, and acceptance of the Work or termination or completion of the Contract or termination of the services of Contractor.

18.07 *Controlling Law*

A. This Contract is to be governed by the law of the state in which the Project is located.

18.08 *Headings*

A. Article and paragraph headings are inserted for convenience only and do not constitute parts of these General Conditions.

Copyright © 2013 National Society of Professional Engineers, American Council of Engineering Companies, and American Society of Civil Engineers. All rights reserved.

These Supplementary Conditions amend or supplement the Standard General Conditions of the Construction Contract, EJCDC® C-700 (2013 Edition). All provisions that are not so amended or supplemented remain in full force and effect.

To the greatest extent possible the modifications to the Standard General Conditions of the Construction Contract (EJCDC 700) have been made electronically in the text of the General Conditions. The modifications are shown in the General Conditions as strikeout for deletions and bold/underline for additions. These Supplementary Conditions contain additional "project specific" changes, additions or modifications.

The terms used in these Supplementary Conditions have the meanings stated in the General Conditions. Additional terms used in these Supplementary Conditions have the meanings stated below, which are applicable to both the singular and plural thereof.

The address system used in these Supplementary Conditions is the same as the address system used in the General Conditions, with the prefix "SC" added thereto.

ARTICLE 5 – AVAILABILITY OF LANDS; SUBSURFACE AND PHYSICAL CONDITIONS; HAZARDOUS ENVIRONMENTAL CONDITIONS

SC-5.03 Subsurface and Physical Conditions

SC-5.03 Add the following new paragraphs immediately after Paragraph 5.03.B:

C. The following reports of explorations and tests of subsurface conditions at or adjacent to the Site are known to Owner:

1. *Subsurface Exploration and Foundation Recommendations* Report dated June 2015 by DOWL. The Technical Data contained in such report upon whose accuracy Contractor may rely are incorporated therein by reference.

D. Contractor may examine copies of reports and drawings identified in SC 5.03.C and SC 5.03.D that were not included with the Bidding Documents at _____DOWL_____ during regular business hours, or may request copies from Engineer.

SC-5.06 Add the following subparagraph 5.06.A.1 and 5.06.A.2:

1. The following reports regarding Hazardous Environmental Conditions at the Site are known to Owner:

a. *Contaminated Sites Review* Report dated January 14, 2015 by DOWL. The Technical Data contained in such report upon whose accuracy Contractor may rely are known and documented contaminated sites along the proposed pipe corridor.

Copyright © 2013 National Society of Professional Engineers, American Council of Engineering Companies, and American Society of Civil Engineers. All rights reserved.

ARTICLE 6 – BONDS AND INSURANCE

SC-6.03 Contractor's Liability Insurance

Add the following new paragraph immediately after Paragraph 6.03.J:

K. The limits of liability for the insurance required by Paragraph 6.03 of the General Conditions shall provide coverage for not less than the following amounts or greater where required by Laws and Regulations:

1. Workers' Compensation, and related coverages under Paragraphs 6.03.A.1 and A.2 of the General Conditions:

State:	**Statutory**
Federal, if applicable (e.g., Longshoreman's):	**Statutory**
Employer's Liability:	
Bodily injury, each accident	**$1,000,000**
Bodily injury by disease, each employee	**$1,000,000**
Bodily injury/disease aggregate	**$1,000,000**
~~**For work performed in monopolistic states, stop-gap liability coverage shall be endorsed to either the worker's compensation or commercial general liability policy with a minimum limit of:**~~	~~**$1,000,000**~~

2. Contractor's Commercial General Liability under Paragraphs 6.03.B and 6.03.C of the General Conditions:

General Aggregate	**$2,000,000**
Products - Completed Operations Aggregate	**$1,000,000**
Personal and Advertising Injury	**$1,000,000**
Each Occurrence (Bodily Injury and Property Damage)	**$1,000,000**

3. Automobile Liability under Paragraph 6.03.D. of the General Conditions:

Combined Single Limit	**$1,000,000**

4. Excess or Umbrella Liability:

Per Occurrence	**$3,000,000**
General Aggregate	**$3,000,000**

Copyright © 2013 National Society of Professional Engineers, American Council of Engineering Companies, and American Society of Civil Engineers. All rights reserved.

5. Contractor's Pollution Liability:

Each Occurrence	**$**	**Contractor to Propose for Owner Approval**
General Aggregate	**$**	**Contractor to Propose for Owner Approval**

☐ **If box is checked, Contractor is not required to provide Contractor's Pollution Liability insurance under this Contract**

6. Additional Insureds: In addition to Owner and Engineer, include as additional insureds the following:

a. City of Bethel

b. DOWL

7. Contractor's Professional Liability:

Each Claim	**$**	**Contractor to Propose for Owner Approval**
Annual Aggregate	**$**	**Contractor to Propose for Owner Approval**

ARTICLE 7 – CONTRACTOR'S RESPONSIBILITIES

SC-7.12 Safety and Protection

A. The Contractor is to prepare and maintain a project specific health and safety plan. Health and Safety plan will be subject to review and approval by Engineer and Owner.

ARTICLE 8 – ENGINEER'S STATUS DURING CONSTRUCTION

SC-8.03 Project Representative

A. The Resident Project Representative (RPR) will be Engineer's representative at the Site, will act as directed by and under the supervision of Engineer, and will confer with Engineer regarding RPR's actions.

1. General: RPR's dealings in matters pertaining to the Work in general shall be with Engineer and Contractor. RPR's dealings with Subcontractors shall only be through or with the full knowledge and approval of Contractor. RPR shall generally communicate with Owner only with the knowledge of and under the direction of Engineer.

Copyright © 2013 National Society of Professional Engineers, American Council of Engineering Companies, and American Society of Civil Engineers. All rights reserved.

2. **Schedules: Review the progress schedule, schedule of Shop Drawing and Sample submittals, and Schedule of Values prepared by Contractor and consult with Engineer concerning acceptability.**

3. **Conferences and Meetings: Attend meetings with Contractor, such as preconstruction conferences, progress meetings, job conferences, and other Project-related meetings, and prepare and circulate copies of minutes thereof.**

4. **Liaison:**

   a. **Serve as Engineer's liaison with Contractor. Working principally through Contractor's authorized representative or designee, assist in providing information regarding the provisions and intent of the Contract Documents.**

   b. **Assist Engineer in serving as Owner's liaison with Contractor when Contractor's operations affect Owner's on-Site operations.**

   c. **Assist in obtaining from Owner additional details or information, when required for proper execution of the Work.**

5. **Interpretation of Contract Documents: Report to Engineer when clarifications and interpretations of the Contract Documents are needed and transmit to Contractor clarifications and interpretations as issued by Engineer.**

6. **Shop Drawings and Samples:**

   a. **Record date of receipt of Samples and Contractor-approved Shop Drawings.**

   b. **Receive Samples which are furnished at the Site by Contractor, and notify Engineer of availability of Samples for examination.**

   c. **Advise Engineer and Contractor of the commencement of any portion of the Work requiring a Shop Drawing or Sample submittal for which RPR believes that the submittal has not been approved by Engineer.**

7. **Modifications: Consider and evaluate Contractor's suggestions for modifications in Drawings or Specifications and report such suggestions, together with RPR's recommendations, if any, to Engineer. Transmit to Contractor in writing decisions as issued by Engineer.**

8. **Review of Work and Rejection of Defective Work:**

   a. **Conduct on-Site observations of Contractor's work in progress to assist Engineer in determining if the Work is in general proceeding in accordance with the Contract Documents.**

   b. **Report to Engineer whenever RPR believes that any part of Contractor's work in progress is defective, will not produce a completed Project that conforms generally to the Contract Documents, or will imperil the integrity of the design concept of the completed Project as a functioning whole as indicated in the Contract Documents, or has been damaged, or does not meet the requirements of any inspection, test or approval required to be made; and advise Engineer**

Copyright © 2013 National Society of Professional Engineers, American Council of Engineering Companies, and American Society of Civil Engineers. All rights reserved.

of that part of work in progress that RPR believes should be corrected or rejected or should be uncovered for observation, or requires special testing, inspection or approval.

9. Inspections, Tests, and System Start-ups:

a. Verify that tests, equipment, and systems start-ups and operating and maintenance training are conducted in the presence of appropriate Owner's personnel, and that Contractor maintains adequate records thereof.

b. Observe, record, and report to Engineer appropriate details relative to the test procedures and systems start-ups.

10. Reports:

a. Furnish to Engineer periodic reports as required of progress of the Work and of Contractor's compliance with the Progress Schedule and schedule of Shop Drawing and Sample submittals.

b. Draft and recommend to Engineer proposed Change Orders, Work Change Directives, and Field Orders. Obtain backup material from Contractor.

c. Immediately notify Engineer of the occurrence of any Site accidents, emergencies, acts of God endangering the Work, force majeure or delay events, damage to property by fire or other causes, or the discovery of any Constituent of Concern or Hazardous Environmental Condition.

11. Payment Requests: Review applications for payment with Contractor for compliance with the established procedure for their submission and forward with recommendations to Engineer, noting particularly the relationship of the payment requested to the Schedule of Values, Work completed, and materials and equipment delivered at the Site but not incorporated in the Work.

12. Certificates, Operation and Maintenance Manuals: During the course of the Work, verify that materials and equipment certificates, operation and maintenance manuals and other data required by the Contract Documents to be assembled and furnished by Contractor are applicable to the items actually installed and in accordance with the Contract Documents, and have these documents delivered to Engineer for review and forwarding to Owner prior to payment for that part of the Work.

13. Completion:

a. Participate in Engineer's visits to the Site to determine Substantial Completion, assist in the determination of Substantial Completion and the preparation of a punch list of items to be completed or corrected.

b. Participate in Engineer's final visit to the Site to determine completion of the Work, in the company of Owner and Contractor, and prepare a final punch list of items to be completed and deficiencies to be remedied.

Copyright © 2013 National Society of Professional Engineers, American Council of Engineering Companies, and American Society of Civil Engineers. All rights reserved.

c. **Observe whether all items on the final list have been completed or corrected and make recommendations to Engineer concerning acceptance and issuance of the notice of acceptability of the work.**

C. The RPR shall not:

1. **Authorize any deviation from the Contract Documents or substitution of materials or equipment (including "or-equal" items).**
2. **Exceed limitations of Engineer's authority as set forth in the Contract Documents.**
3. **Undertake any of the responsibilities of Contractor, Subcontractors, or Suppliers.**
4. **Advise on, issue directions relative to, or assume control over any aspect of the means, methods, techniques, sequences or procedures of Contractor's work.**
5. **Advise on, issue directions regarding, or assume control over security or safety practices, precautions, and programs in connection with the activities or operations of Owner or Contractor.**
6. **Participate in specialized field or laboratory tests or inspections conducted off-site by others except as specifically authorized by Engineer.**
7. **Accept Shop Drawing or Sample submittals from anyone other than Contractor.**
8. **Authorize Owner to occupy the Project in whole or in part.**

ARTICLE 17 – FINAL RESOLUTION OF DISPUTES

SC-17.02 ARBITRATION

A. All matters subject to final resolution under this Article will be decided by arbitration in accordance with the Construction Industry Rules of the American Arbitration Association subject to the conditions and limitations of this paragraph. This agreement to arbitrate and any other agreement or consent to arbitrate entered into will be specifically enforceable under the prevailing law of any court having jurisdiction.

B. The demand for arbitration will be filed in writing with the other party to the Contract. The demand for arbitration will be made within the specific time required in this Article, or if no specified time is applicable within a reasonable time after the matter in question has arisen, and in no event shall any such demand be made after the date when institution of legal or equitable proceedings based on such matter in question would be barred by the applicable statute of limitations. The demand for arbitration should include specific reference to Paragraph SC-17.02.D below.

C. No arbitration arising out of or relating to the Contract shall include by consolidation, joinder, or in any other manner any other individual or entity (including Engineer, and Engineer's consultants and the officers, directors,

Copyright © 2013 National Society of Professional Engineers, American Council of Engineering Companies, and American Society of Civil Engineers. All rights reserved.

partners, agents, employees or consultants of any of them) who is not a party to this Contract unless:

1. **the inclusion of such other individual or entity is necessary if complete relief is to be afforded among those who are already parties to the arbitration; and**
2. **such other individual or entity is substantially involved in a question of law or fact which is common to those who are already parties to the arbitration and which will arise in such proceedings.**

D. The award rendered by the arbitrator(s) shall be consistent with the agreement of the parties, in writing, and include a concise breakdown of the award, and a written explanation of the award specifically citing the Contract provisions deemed applicable and relied on in making the award.

E. The award will be final. Judgment may be entered upon it in any court having jurisdiction thereof, and it will not be subject to modification or appeal, subject to provisions of the Laws and Regulations relating to vacating or modifying an arbitral award.

F. The fees and expenses of the arbitrators and any arbitration service shall be shared equally by Owner and Contractor.

Copyright © 2013 National Society of Professional Engineers, American Council of Engineering Companies, and American Society of Civil Engineers. All rights reserved.

SECTION 01 00 00
GENERAL REQUIREMENTS

PART 1 - GENERAL

1.01 GENERAL

A. This project scope consists of constructing approximately 6,900 feet of above-ground insulated water main from the City Subdivision water treatment plant on Akiak Street to the Chief Eddie Hoffman Highway where it runs parallel to the highway until the adult Corrections Facility where it crosses the highway and runs past institutions until it connects with the existing City Subdivision Distribution "Loop A". Improvements to the water treatment plant and approximately 2,100 feet of service lines are included in this project.

B. A portion of the construction materials for this project have been procured by the City and will be made available to the Contractor for installation and is provided in Attachment B. City procured materials include:

1. **8,700 linear feet of 8" x20" Arctic Insulated Pipe Water Main including the necessary joint appurtenances**
2. **(12) 8"x20" Insulated Arctic Pipe long sweep 90 degree bend**
3. **100 Helical Anchors**
4. **3,000 linear feet of insulated dual 3" conduit Arctic service pipe.**

1.02 PRE-CONSTRUCTION REQUIREMENTS

A. Photographs and videos will be taken showing details of existing conditions including service line easements and owner furbished materials so that restoration is done properly after the project is complete.

B. City of Bethel bears sole responsibility for keeping the right-of-way and easements clean of debris, dirt and gravel during construction. It will be City of Bethel responsibility to require the owner to remove their materials, items, or debris from the right-of-ways and easements. It will be the Contractor responsibility to communicate with the City of Bethel issues or items located in the way of construction. After Construction, the Contractor is solely responsible for returning the right-of-way to its original condition (at Contractor's sole expense). This will include, but not be limited to: Landscaping, re-seeding the grass, slope stabilization, etc.

1.03 EXTRA OR DISPUTED WORK REPORTS

A. If payment for work performed is to be based on time and materials, or if a claim is contemplated in which time and material reports would assist in settling the claim, the Contractor shall maintain adequate records on the Daily Report forms available from the Engineer. The reported work shall have the Engineer's and/or Resident Project Representative's signature to indicate his concurrence prior to being submitted to the Engineer or Contract Administrator within 48 hours of the time the work was performed. Concurrence by the Resident Project Representative does not indicate agreement to or authorization of "extra work" or "extra payment" but rather indicates agreement that the work effort recorded during that time period was in fact done.

1.04 MATERIAL TESTING AND INSPECTION

A. Contractor's Obligation

1. The Contractor shall obtain and pay for all testing that may be necessary to qualify Contractor-furnished materials for use in the work. This shall include material quality tests, mix designs, equipment and plant calibration, and other similar tests required to qualify Contractor-furnished materials for compliance with the specifications. The Contractor shall submit test results to the Engineer sufficiently in advance of the work so that approval to proceed is received by the Contractor prior to using that material in the work.
2. Samples of material required for testing shall be furnished by the Contractor.
3. The Contractor is responsible for coordinating with the Resident Project Representative and requesting all testing, including field testing paid for by the Owner.
4. The Contractor shall pay for all failing field tests performed to monitor construction control of the materials used in the work.
5. Payment for failing field tests will be deducted from any amounts due or to become due to the Contractor.

B. Owner's Obligation

1. The Owner will be paying for a Resident Project Representative, if any, to be onsite part-time during the construction.

1.05 WEATHER LIMITATIONS

A. The Contractor shall protect each increment of completed work against detrimental effects due to weather, by approved methods. Any increment of completed work that is damaged by freezing or rain, shall be reconditioned, reshaped, re-compacted, or replaced by the Contractor in conformance with the requirements of this specification without additional cost to the Owner.

B. The first barge of the year usually arrives in the first week of June.

1.06 NOTICE TO BE GIVEN

A. Contractor shall notify the Engineer at least 72 hours prior to the following:

1. Disruptions in water and sewer services
2. Traffic Control disruptions
3. Helical pile installation
4. Testing

B. Contractor shall notify the existing homeowners on Loop A (and/or any other existing water circulation loop) at least 48 hours prior to the following:

1. Disruptions in water services
2. Water line Flushing
3. Additionally, the Contractor shall receive permission to enter the homeowner’s house to modify the circulation pumps and give the 72 hours’ notice on which day they will need access to the circulation pump.

1.07 LABOR STANDARDS, REPORTING, AND PREVAILING WAGE RATES DETERMINATIONS

A. The prevailing wage rates of the State of Alaska apply to this contract as do any requirements of the State of Alaska associated with the use of these State prevailing wages.

PART 2 - PRODUCTS

2.01 NOT USED

PART 3 - EXECUTION OF WORK

3.01 Survey Control

A. Benchmarks, monuments, and baselines shown on the Drawings, shall be used for horizontal and vertical control by the Contractor. Caution shall be used when working near these and other survey monuments so as not to disturb them.

3.02 DISTURBING EXISTING MONUMENTS AND PROPERTY CORNERS

A. Should the Contractor's normal prosecution of work require that he disturb any property corners or survey monuments, he shall re-establish them after completion of the project and at no additional cost to the Owner. All referencing and re-establishment of property corners and survey monuments shall be performed by a Land Surveyor registered in the State of Alaska.

3.03 CONSTRUCTION SURVEY

A. All construction survey stakes will be placed by the Contractor, based on the reference points indicated in the Drawings.

3.04 AS-BUILTS

A. General

1. The Contractor shall provide the Owner as-built information on all construction. This information will include copies of the Contractor's field survey notes and a set of the Drawings red-lined with as-built information. Items to be as-built by the Contractor, include, but not are limited to, the water main alignments, culverts length and location, service line placements, service boxes, etc.

B. Control

1. Basis for horizontal control for as-built information shall be the system of stationing shown on the Drawings. All elevations shall be based on the datum used for design.

C. Survey Notes

1. All field survey notes shall include date, name of surveyor or foreman, and adequate description of TBM's when used. Sketches shall have north arrow and show relationship or ties to stationing control. All notes shall be reduced to show actual elevation at design datum.

END OF SECTION 01 33 00

SECTION 01 00 01
METHOD OF MEASUREMENT AND BASIS OF PAYMENT

PART 1 - GENERAL

1.01 SCOPE

A. The method of measurement and basis of payment is described in this section.

1.02 GENERAL

A. The total bid price for each item of the Contract shall cover all work shown on the Construction Drawings and required by the Specifications and other Contract Documents. All costs in connection with the Work, including furnishing all materials, equipment, supplies and appurtenances; providing all construction plant, equipment, and tools; and performing all necessary labor and supervision to fully complete the Work, shall be included in the unit and lump sum bid prices. No item required by the Contract Documents for the proper and successful completion of the Work will be paid for outside of or in addition to the prices submitted in the bid. All work not specifically set forth as a pay item in the Bid Form included but not limited to reclamation, sodding, topsoil, seed, reinstalling existing signs, replacing construction caused damaged signs, shall be considered a subsidiary obligation of the Contractor and all costs in connection therewith shall be included in the bid prices. Bid prices will also apply to additional similar work that is not shown on the plans that the Engineer may require to be installed during the course of the project.

B. All work completed under the Contract will be measured by the Engineer according to the United States Standard Measure. A station when used as a definition or term of measurement shall be 100 linear feet measured horizontally, unless otherwise specified.

C. The method of measurement and computations to be used in determination of quantities of material furnished and of work performed under the Contract will be those methods generally recognized as conforming to standard engineering practice.

D. Unless otherwise specified, longitudinal measurements for area computations will be made horizontally, and no deductions will be made for individual items having an area of nine square feet or less. Unless otherwise specified, transverse measurements for area computations will be the neat dimensions shown on the Drawings or ordered in writing by the Engineer.

E. All items which are measured by the linear foot, such as pipe culverts, sewers, curb and gutter or water lines, will be measured parallel to the base or foundations upon which structures are placed, unless otherwise shown on the Drawings.

1.03 ESTIMATED QUANTITIES

A. All estimated quantities stipulated in the Bid Form or other Contract Documents are approximate and are to be used only (a) as a basis for estimating the probable cost of the Work and (b) for the purpose of comparing the bids submitted for the Work. The basis of payment for work and materials will be by lump sum or unit price as indicated. The Contractor shall supply a schedule of values for each lump sum item to be reviewed and approved by the Engineer.

B. The Contractor agrees to make no claim for damages, anticipated profits, or otherwise on account of any difference between the amounts of work actually performed and materials actually furnished and the estimated amounts herein, except as follows.

C. If the Contractor desires to receive payment for materials in storage for any bid item, the Contractor shall provide a breakout of all materials and their actual costs for that bid item. The Contractor shall furnish the Engineer copies of the supplier's invoices relating to the breakout to verify all materials being requested for payment under that bid item. The Contractor shall furnish copies of the required invoices no later than 5 business days before the cut-off-date of each progress payment. Invoices received later than 5 business days before the cutoff date will not be included in that progress payment. Materials in storage will only be paid for major bid items and will not be paid for associated items such as nuts, bolts, glue, gaskets, tools, etc. Materials in storage are Contractor responsibility and Contractor must provide insurance to cover any loss, theft, damage, etc. Quantities to be utilized on the monthly pay request will be based on signed daily quantities.

D. The following applies to materials in storage; materials in storage will only be allowed on the first, three pay requests received from the Contractor unless otherwise agreed to by the Engineer. Materials in storage must be tied to an actual bid item, and quantities in storage must be removed from the storage quantity as work progresses. All materials in storage will be removed from the pay estimate no later than the sixth pay estimate, for each construction season. Any materials ordered and stored over the winter shall be secured and properly covered in accordance with the material manufactures recommendations and per the Engineer's directions.

E. Contractor shall develop a form on which to record the percent complete for all lump sum bid items and submit the form at the preconstruction meeting, to the Engineer for approval. At the end of each pay period the Engineer and Contractor must agree on bid schedule values and the percent completion actually installed. A copy signed by the Contractor must be distributed to the Resident Project Representative on a monthly basis 5 days before the monthly pay period ends.

1.04 METHOD OF MEASUREMENT AND BASIS OF PAYMENT

A. ITEM :

101- Mobilization (Lump Sum)

Payment will be made on a lump sum basis for all Contractor Mobilization and Demobilization efforts.

102- Construction Survey (Lump Sum)

Payment will be made on a lump sum basis for all Contractor Construction Survey efforts. Preparation of all detailed record drawings in accordance with the specifications will also be paid under this item.

103- Erosion and Pollution Control (Lump Sum)

Payment will be made on a lump sum basis for all Contractor Erosion, Sediment, and pollution Control efforts including preparation of a project specific erosion and sediment control plan, and furnishing and installing erosion and sediment control measures, and maintaining the erosion and sediment control during the project.

104-Service Connect and Stub-out Boxes (Each)

Payment will be made for Contractor to furnish, install, and test service connections and stub-out boxes on the water main. All appurtenances required for installation and testing of these items will be included in this item. Contractor will be paid on a unit price basis. Basis of measurement for Service Connect and Stud-out Boxes will be per each.

105a-Facility Service Connection (Each)

Payment will be made for Contractor to furnish and install materials for connecting a facility to the water service. This pay item will include preparation of a service plan, coordination with the Owner, the Service Owner, and Engineer. It will include all incidental materials and work for connecting water service to the facilities identified in the Construction Documents. It will include all appurtenances shown in the Plan Sheet D8 inside a facility. It will also include furnishing and installation of heat trace appurtenances for service line, but not the heat trace itself. Basis of measurement for Facility Service Connection will be per each.

105b-Transition Existing Service (Each)

Payment will be made on a unit price basis for Contractor to transition an existing water service to the new water main. Basis of measurement for Transition Existing Service will be per each. Payment for the Service Connect Boxes will not be included in this pay item.

106-Fire Hydrants (Each)

Payment will be made on a unit price basis for furnishing of all materials associated with Inline Hydrants or End of Line Hydrants. Pay item is to include all installation costs. Basis of measurement for Fire Hydrant will be per each.

107-Existing Service Circulation Pump Reversal (Each)

Payment will be made on a unit price basis for furnishing all materials, labor and coordination with property owners necessary to reverse the flow of water to a single residence or facility served by the existing City Subdivision Loop “A”. Basis of measurement for Existing Service Circulation Pump Reversal will be per each.

108-Air Releases (Each)

Payment will be made on a unit price basis for furnishing of all materials associated with air releases for both the water main and the glycol system. All installation costs will be covered. In situations where air releases are located inside fire hydrants this pay item will be used. Basis of measurement for Air Releases will be per each.

109- Access Tees (Each)

Payment will be made on a unit price basis for furnishing of all materials associated with the installation of an access tee. All installation costs will be covered. Basis of measurement for Access Tees will be per each.

110-Installation of Water Main (LF)

Payment will be made on a unit price basis for the installation of owner procured 8” x 20” arctic insulated water main. Basis of measurement for Installation of Water Main will be per linear foot. Owner has also

procured necessary joint kits for water main. Engineer or assigned Resident Project Representative and Contractor will measure the length of installed main together. All dewatering, testing, flushing, disinfection, and inspection is to be considered incidental. This unit price shall cover all costs associated with installation, starting of the water main, and placing it into commission. Replacement and relocation of existing utilities is incidental to this pay item.

111-Standard Service Lines with Owner Procured Carrier Pipe (1" or 2" supply, and 1" return) (LF)

Payment will be made on a unit price basis for the installation of owner procured water service pipe and furnishing and installation of service supply and return lines. Basis of measurement for Standard Service Lines will be per linear foot. All dewatering, testing, flushing, disinfection, and inspection is to be considered incidental. This unit price shall cover all costs associated with starting of the water service line, and placing it into commission.

112- Hospital Service (Lump Sum)

Payment will be made on a lump sum basis for furnishing and installation of all work associated with connecting the hospital to the new water main. This pay item shall include work associated with preparation and approval of a detailed service plan. The pay item shall include work associated with the installation of the hospital water service, the water service connection to the main, the water service connection to the facility, all incidental pipe, valves, pumps, meters, bends, building penetrations, and backflow prevention systems. The pay item will include all work associated with dewatering, flushing, testing, and disinfecting the hospital water service.

113-CEHH Crossing

Payment will be made on a lump sum basis for furnishing and installing the crossing as specified in the specifications, Construction Drawings, and in accordance with the DOT&PF Utility Permit. The lump sum price shall be considered full compensation for furnishing all labor, pipe, incidental materials, tools, equipment, apparatus, and incidentals for doing all the work required. All Submittals are considered incidental.

114-Furnish and Install Helical Pier Anchor (EA)

Payment will be made on a unit price basis for furnishing and installing of a helical pier anchor. The unit price work will include all work associated with the anchor including the strap to secure the pipe. All Submittals are considered incidental, including submittals to Engineer to assure quality. Basis of measurement for Furnish and Install Helical Pier Anchor will be per each.

115- Install Owner Provided Helical Pier Anchor and Furnish and Install Pipeline Support (Each)

Payment will be made on a unit price basis for installation of Helical Anchors supplied by the owner, and furnishing and installation of materials associated with the support. The unit price work will include all work associated with the anchor including the strap to secure the pipe. All Submittals are considered incidental, including submittals to Engineer to assure quality. Basis of measurement for Install Owner Provided Helical Pier Anchor and Install Pipeline Support will be per each.

116-Furnish and Install Support Blocks (Each)

Payment will be made on a unit price basis for furnishing and installing all materials associated with a support block. Additional treated timber sleepers and material will be considered incidental and will not warrant additional payment beyond this pay item. Basis of measurement for Furnish and Install Support

Blocks will be per each.

117-Electrical Heat Trace- Service Lines (LF)

Payment will be made on a unit price basis for furnishing and installing heat trace in the water service lines. Engineer or assigned Resident Project Representative and Contractor will measure the length of installed water service line together. Basis of measurement for Electrical Heat Trace – Service Lines will be per linear foot.

118-Glycol Loop- Main Line (LF)

Payment will be made on a unit price basis for furnishing and installing glycol heat trace lines to the water main. Engineer or assigned Resident Project Representative and Contractor will measure the length of installed main together. This unit price shall cover all costs associated with starting of the glycol heat trace system, and placing it into commission. Basis of measurement will be per linear foot.

119-Direct Bury Crossing (Each)

Payment will be made on a unit price basis. The unit price shall be considered full compensation for furnishing all labor, incidental materials, tools, equipment, apparatus, and incidentals for doing all the work required with a direct bury crossing of any length. Construction of road, trail, and/or driveway crossings associated with the direct bury crossings will be included in this bid item. Basis of measurement will be per each.

120-Casing Crossing (Each)

Payment will be made on a unit price basis. The unit price shall be considered full compensation for furnishing all labor, pipe, incidental materials, tools, equipment, apparatus, and incidentals for doing all the work required with a casing crossing of any length. Construction of road, trail, and/or driveway crossings associated with the direct bury crossings will be included in this bid item. Basis of measurement will be per each.

121- Remove and Replace Boardwalk for Installation (LF)

Payment will be made on a unit price basis for the removal and replacement of timber boardwalk. Boardwalks are to be replaced with materials of similar or improved quality, and with construction techniques that match existing boardwalk construction techniques. Basis of measurement will be per linear foot.

122- Tie in to Existing Loop “A” (Lump Sum)

Payment will be made on a lump sum basis for furnishing and installation of all Work associated with connecting the new main to existing loop “A”. Flushing of existing loop “A”, if required, shall be considered incidental. Work for installation of the access tee is not covered under this pay item.

123- Mechanical Upgrades (Lump Sum)

Payment will be made on a lump sum basis for mechanical improvements inside the City Subdivision Water Treatment Plant (CSWTP). Payment will be full compensation for furnishing all labor, pipe, valves, pumps, incidental materials, tools, equipment, apparatus, and incidentals for doing all the work required with the

mechanical upgrades. Payment will also cover all work associated with penetrations made to the CSWTP, and supports for the water and glycol pipes.

124-Electrical Upgrades (Lump Sum)

Payment will be made on a lump sum basis for all electrical improvements inside the City Subdivision Water Treatment Plant (CSWTP). Payment will be full compensation for furnishing all labor, materials, tools, equipment, apparatus, and incidentals for doing all the work required with the electrical upgrades.

125- Instrumentation (Lump Sum)

Payment will be made on a lump sum basis for all instrumentation improvements inside the City Subdivision Water Treatment Plant (CSWTP). Payment will be full compensation for furnishing all labor, materials, tools, equipment, apparatus, and incidentals for doing all the work required with the instrumentation improvements.

END OF SPECIFICATION 01 00 01

SECTION 01 33 00
SUBMITTALS PROCEDURES

PART 1 - GENERAL

1.01 DESCRIPTION

A. The work of this section consists of submittal requirements before and during construction.

1.02 SCHEDULES

A. As soon as possible after Notice of Award and before beginning any work, submit Progress Schedule and Schedule of Values as a package. Engineer will review the Progress Schedule and the Schedule of Values for format and content.

B. Progress Schedule: Submit three copies of Progress Schedule (normally in bar chart form) showing estimated starting and completion dates for each part of the work. The first progress payment will not be issued until an acceptable progress schedule is submitted.

C. Schedule of Values: Submit a schedule of dollar values based on the Project Schedule including all major components and mile stones for each lift station. Break down into component parts each lift station using a series of operations for which progress payments may be requested. The total cost of all items shall equal the contract sum. The Engineer may request data to verify accuracy of dollar values.

1.03 SHOP DRAWINGS, PRODUCT DATA, AND SAMPLES

A. General Procedures:

1. As specified in the individual sections, forward submittals to Engineer at least 30 days before need for approval. All submittals will be made electronically in the format specified by the Engineer, all of which will be retained by Engineer. Submit any additional copies that are to be returned.

2. Coordinate all submittals and review them for legibility, accuracy, completeness, and compliance with contract requirements. Forward submittals that are related to or affect one another as a package to facilitate coordinated review.

3. Submittals will not be accepted for review if identification or approval stamps are missing or are placed on the back of the submittal, an incorrect amount of submittals are submitted, the transmittal form is incorrectly filled out, submittals are not coordinated, or submittals do not show evidence of Contractor's approval.

4. Engineer reserves the right to require submittals in addition to those called for in individual sections.

B. Specific Procedures:

1. Shop Drawings: Identify each copy of shop drawings with contract drawing number in lower right hand corner.

2. Samples: Samples shall be large enough to illustrate clearly the functional characteristics and full range of color, texture, or pattern.

3. Manufacturers' Literature: Submit only pertinent pages; mark each copy of standard printed data to identify products referenced in specification section.

C. Engineer Approval:

1. Engineer will indicate approval or disapproval of each submittal and the reasons for disapproval.
2. After Engineer review, revise and resubmit as required. Identify changes made since previous submittal.
3. When Engineer has approved submittals, Contractor's copies will be returned. Any work done before approval shall be at Contractor's own risk. No payment shall be made for any work performed without an approved submittal.

1.04 APPROVED EQUALS

A. For each item proposed as an "approved equal," submit a separate request that is clearly marked as an “approved equal request” to the Engineer. With each request submit supporting data, including:

1. Drawings and samples as appropriate.
2. Comparison of the qualities of the proposed item with that specified.
3. Changes required in other elements of the work because of the substitution.
4. Name, address, and telephone number of vendor.
5. Manufacturer's literature regarding installation, operation, and maintenance, including schematics for electrical and hydraulic systems, lubrication requirements, and parts lists. Describe availability of maintenance service, and state source of replacement materials.

B. A request for approval constitutes a representation that Contractor:

1. Has investigated the proposed item and determined that it is equal or superior in all respects to that specified.
2. Will provide the same warranties for the proposed item as for the item specified.
3. Has determined that the proposed item is compatible with interfacing items.
4. Will coordinate the installation of an approved item and make all changes required in other elements of the work because of the substitution.
5. Waives all claims for additional expenses that may be incurred as a result of the substitution.

C. The Engineer has final determination whether or not an item is approved and considered equal.

1.05 MANUFACTURER’S INSTALLATION INSTRUCTIONS

A. For each item proposed as an "approved equal," submit a separate request that is clearly marked as an “approved equal request” to the Engineer. With each request submit supporting data, including.

PART 2 - PRODUCTS

2.01 NOT USED

PART 3 - EXECUTION

3.01 NOT USED

END OF SECTION 01 33 00

SECTION 02 41 00
SITE DEMOLITION

PART 1 - GENERAL

1.01 SUMMARY

A. This section covers the furnishing of materials, labor, and equipment required to partially or entirely remove and/or demolish those items identified on the Drawings; transport, salvage or dispose of said items; and restore any disturbed areas.

1.02 JOB CONDITIONS

A. Conditions of structures: The Owner assumes no responsibility for actual condition of structures to be salvaged or demolished.

B. Explosives: Use of explosives will not be permitted.

C. Traffic: Conduct demolition and removal operations to ensure minimum interference with streets, walks or other adjacent facilities being used.

D. Protection: Ensure safe passage of persons around area of demolition. Conduct operations to prevent injury to adjacent buildings, structures, and persons.

E. Damages: Promptly repair damages caused to adjacent structures by demolition operations at no cost to the Owner.

PART 2 - PRODUCTS

Not applicable.

PART 3 - EXECUTION

3.01 SITE SURFACE CONDITIONS

A. Examine the areas and conditions under which work of this section will be performed. Determine the location and extent of demolition required by the contract documents and verify the work required by a careful site examination. Some previous demolition or removal may have occurred since preparation of contract documents.

3.02 DEMOLITION

A. Buried Structures

1. Excavations to remove buried structures and pipes shall be restored as described in Paragraph C or below.

B. Excavation Backfill: Completely fill below-grade areas and voids resulting from removal of structures.

1. Backfill excavations with classified or unclassified material as appropriate for the location on-site.

2. Thoroughly compact classified backfill material to 95 percent of maximum density.

3. Fill shall be placed as described in Section 31 20 00, EARTH MOVING.

3.03 DISPOSAL OF DEMOLISHED MATERIALS

A. All debris, rubbish, and other materials resulting from demolition operations and not identified as salvageable by the RPR shall be removed and transported to a Contractor-furnished disposal site.

B. Burning of removed materials will not be permitted on site.

END OF SECTION 02 41 00

SECTION 26 05 00

COMMON WORK RESULTS FOR ELECTRICAL

PART 1 - GENERAL

1.01 DESCRIPTION OF RELATED WORK

A. This section applies to all Division 26 and 40 work.

1.02 SCOPE

A. Provide all labor, products, services, equipment and test equipment required to furnish, install, test, and start-up all systems shown and specified.

B. Where the work of several crafts is involved, coordinate all related work to provide each system in complete and in proper operating order.

C. Cooperate with all others involved in the project, with due regard to their work, to promote rapid completion.

D. LOCAL CONDITIONS: The CONTRACTOR shall thoroughly familiarize oneself with the work as well as the local conditions under which the work is to be performed. Schedule work with regard to seasons, weather, climate conditions, and all other local conditions that may affect the progress and quality of work.

1.03 RELATED WORK - AREAS OF RESPONSIBILITY

A. The Contractor shall schedule his work to coordinate through the General Contractor, with all other subcontractors, and with power and telephone utilities in order to maintain job progress and to avoid conflicts with equipment installation or work done by various trades.

B. It shall be the responsibility of the contractor to provide electrical service to, connection and/or interconnection of various units of equipment supplied by others. The contractor shall not be required to set in place or align motors or devices supplied as an integral part of equipment provided by others. Areas in which the contractor shall coordinate include, but are not limited to, the following:

1. Division 25 Mechanical - The CONTRACTOR shall provide conduit, wire and necessary appurtenances to connect to the electrical system all electrically driven, controlled or monitored machinery and equipment installed by others.

2. Division 26 Equipment - The CONTRACTOR shall provide conduit, wire and necessary appurtenances to connect to the electrical system all electrically driven, controlled or monitored machinery and equipment installed by others.

3. Division 40 Equipment - The CONTRACTOR shall provide all conduit, cable/wire, hardware, software, programming, integration and necessary equipment to make a fully function SCADA system in accordance with the drawings and specifications.

C. The contractor shall be responsible for providing, installing and furnishing power to all instrumentation and control devices that are included in this project in accordance with Divisions 25, 26 and 40.

D. The contractor shall be responsible for installing and furnishing conduit and cabling to all instrumentation and control devices that are included in Divisions 40 work (SCADA control system). Conductors shall be tested to insure all installations meet the SCADA Contractor's requirements. Coordinate all work with SCADA contractor.

1.04 CODES AND STANDARDS

A. Codes: Perform all work in strict accordance with all applicable national, state, and local codes, including but not limited to, the latest legally enacted editions of the following specifically noted Codes:

- NFPA 70, National Electric Code - NEC
- ANSI-22, National Electrical Safety Code - NESC
- International Building Code - IBC
- International Fire Code - IFC.

B. If the Contractor observes that the Drawings and/or Specifications are at variance with such codes and regulations, he shall promptly notify the Engineer in writing. Should the Contractor perform any work in non-compliance with the above-mentioned codes and regulations without such notice to the Engineer, the Contractor shall bear all costs associated with correcting the non-complying work.

C. Standards: Reference to the following standards infers that installation, equipment, and materials shall be within the limits for which it was designed, tested, and approved, in conformance with the current publications and standards of the following organizations:

- American National Standards Institute - ANSI;
- American Society for Testing and Materials - ASTM;
- American Society of Heating, Refrigerating and Air Conditioning Engineers - ASHRAE (Standard 90-75);
- Factory Mutual – FM;

- Institute of Electrical and Electronics Engineers - IEEE;
- National Electrical Contractors Association - NECA;
- National Electrical Manufacturers' Association - NEMA;
- National Fire Protection Association - NFPA, and
- Underwriters Laboratory – UL

D. The above codes and standards are referenced to establish minimum requirements; wherever this Specification requires higher grades of material or workmanship than required by the codes, this Specification shall prevail.

E. All electrical work shall be performed by licensed Journeyman Electricians or licensed Apprentice Electricians under the direct supervision of a licensed Journeyman Electrician.

F. Submit written proof of all Journeyman and Apprentice Electricians' current licenses.

G. Submit certification for tests and inspections required by the electrical inspector having jurisdiction. Certificates of approval that are issued shall be transmitted to the Owner with a copy to the Engineer.

H. Cooperate with the Engineer and provide assistance at all times for the inspection of the electrical work performed under this contract. Remove covers, operate machinery, or perform any reasonable work that, in the opinion of the Engineer, will be necessary to determine the completeness, quality, or adequacy of the work.

1.05 SPECIFIC TERMINOLOGY

A. Streamlining: In many instances, the products, reference standards, and other itemized specifications have been listed without verbiage. In these cases, it is implied that the CONTRACTOR shall provide the products and perform in accordance with the references listed.

B. "Furnish" means to purchase material as shown and specified, and cart the material to an approved location at the site or elsewhere as noted or agreed, to be installed by supporting crafts.

C. "Install" means to set in place and connect, ready for use and in complete and properly operating finished condition, material that has been furnished.

D. "Provide" means furnish all products, labor, sub-contracts, and appurtenances required and install to a complete and properly operating, finished condition.

E. "Rough-in and Connect" means provide an appropriate system connection such as conduit with "J" boxes, wiring, switches, disconnects, etc., and all wiring connections. Equipment furnished is received, uncrated, assembled and set in place under the Division in which it is specified.

F. "Accessible" means arranged so that an appropriately dressed man, 6'-2" tall, weighing 250 pounds, may approach the area in question with the tools and products necessary for the work intended, and may then position himself to properly perform the task to be accomplished, without disassembly or damage to the surrounding installation.

G. "Serviceable" means arranged so that the component or product in question may be properly removed and replaced without disassembly, destruction, or damage to the surrounding installation.

H. "Product" is a generic term, which includes materials, equipment, fixtures, and any physical item used on the project.

I. "ENGINEER" is the Owner's Representative as defined in the General Conditions of the Contract.

J. "OWNER" is the City of Bethel as defined in the General Conditions of the Contract.

1.06 DRAWINGS, SPECIFICATIONS & SYMBOLS

A. The Drawings and Specifications are complementary; what is shown on one is as binding as if called for in both. Do not scale the Drawings. Locations of devices, fixtures, and equipment are approximate unless dimensioned.

B. The Drawings are partly diagrammatic and do not show precise routing of conduits or exact location of all products, and may not show in minute detail all features of the installation. However, provide all systems complete and in proper operating order.

C. The location of outlets and equipment are approximate unless dimensioned. The exact locations and routing of conduits shall be governed by structural conditions and physical interferences and by the location of electrical terminations on equipment. Equipment shall be located and installed so that it will be readily accessible for operation and maintenance.

D. If conduit is placed incorrectly with respect to equipment connections or if equipment connections are relocated without appropriate changes in the electrical work, and the resulting work is not coordinated, the work affected shall be removed and re-installed at the Contractor's expense, even if removal and replacement of structural and/or mechanical parts of the work are necessary.

E. Drawing symbols used for basic materials, equipment and methods are commonly used by the industry and should be universally understood. Special items are identified by a

supplementary list of graphical illustrations, or called for on the Drawings or in the Specifications.

1.07 PRODUCT & SYSTEM SUBMITTALS

A. Submit to the Engineer for review and approval, as soon as practical after the date of notice to proceed and before commencement of installation or fabrication of any materials or equipment, manuals containing detailed drawings, diagrams and instructions for installing, operating and maintaining the material and equipment proposed for installation in the electrical work. See Division 01 requirements.

B. The manuals shall be supplied to the Engineer for review and approval in the quantities indicated in Division 01 before any electrical equipment is shipped to the job site. The required test results may be delayed but shall be provided at the time of substantial completion of the project. Record ("As Built") drawings of the work shall be provided upon completion of the work and shall be folded and punched for insertion into the manual after they are reviewed and approved by the Engineer.

C. Manuals for the electrical system shall consist of 3-post, expandable metal hinge binders labeled with the job name and the Contractor's name with tab dividers for each major type of equipment.

D. Any drawings required to be prepared by the contractor or his agent shall be of standard size no larger than 22" by 34" and with symbols similar to those used herein. Drawings shall be prepared using AutoCAD V.2010 or later.

E. Provide manufacturer's installation, operation, maintenance, and service information, shop drawings, etc., for each panel, switchboard, motor control center, and equipment items furnished under the electrical work. Assemble and index each section listing the contents individually on the tab divider for that section. Compile a spare parts list and a suppliers index for each section and assemble in the section provided. Assemble records of all tests, measurements, and calibration settings made for each device.

F. Submittals: Provide submittals for all products and systems described in Division 26 and shown on the Drawings to demonstrate compliance with the requirements of the project. Submit data not later than 60 days after Award of Contract. Furnish equipment submittals in the manner described in Section 01 33 00. In addition, include data for review, and organize data, as noted below:

1. Specific reference and/or Drawings reference for which literature is submitted for review with an index, following Specification format, and item-by-item identification.

2. Manufacturer's name and address, and supplier's name, address, and phone number.

3. Catalog designation or model number with rough-in data and dimensions.

4. Operation characteristics.

5. Complete customized listing of characteristics required. Indicate whether items are "As Specified" or "Proposed Substitution". Indicate any deviations on submittal. Mark out all non-applicable items. The terminology "As Specified" used without this customized listing is not acceptable.

6. Wiring diagrams for the specific system.

7. Working construction Drawings (Shop Drawings).

G. Submittal Data

1. Prior to the submission of the required Shop Drawings, hold a meeting with all the trades and check the Shop Drawings for discrepancies, dimensional errors, omissions, contradictions, and departures from the Contract requirements. The Shop Drawings shall then be corrected and submitted to the Engineer with appropriate notes

2. With prior permission from the Engineer, partial submittals will be considered for review provided that they are complete sections, as listed below:

   a. Individual Special Systems (Control Panels, etc.)

   b. Controls and Disconnects

   c. Raceways, Fittings, and Supports

   d. Wire and Cable

   e. Wiring Devices

3. Mark submittal literature and Shop Drawings clearly and bind 8-1/2" X 11" literature in three-hole loose-leaf binders by individual sets.

4. Submittal review is for general design and arrangement only and does not relieve the Contractor from any of the requirements of the Contract Documents. Submittals will not be checked for quantity, dimension, fit or proper technical design of manufactured equipment. Where the Contractor has not specifically noted deviations of substitute product or system performance in the submittal, provision of a complete and satisfactory working installation of equal quality to system specified is the sole responsibility of the Contractor.

1.08 AS-BUILT DRAWINGS

A. Reference requirements stated elsewhere in these Specifications.

B. In addition to other requirements, mark up a clean set of Drawings as the Work progresses, to show the dimensioned location and routing of all electrical Work which will become permanently concealed. Show routing or work in permanently concealed blind spaces within the building. Show complete routing and sizing of any significant revisions to the systems shown.

C. Maintain "As-Built" Drawings in an up-to-date fashion in conjunction with the actual progress of installation. "As-Built" progress mark-ups shall be available on-site for examination by the ENGINEER at all times. At the end of the project, forward to the Engineer a complete set of drawings marked in red pencil in a manner consistent with the Contract Drawings, indicating the changes made on the job.

D. Prepare wiring diagrams on reproducible media using AutoCAD V.2010 for all individual special systems as installed. Identify all components and show all wire and terminal numbers and connections. Prior to substantial completion, deliver these Drawings and their files (.dwg) on CD to the ENGINEER and obtain a written receipt.

E. Record voltage, current, megohmeter and ground ohmic resistance test measurements made on the electrical work, the trip units, fuses, and overload relay elements installed in the equipment, and the setting of all control devices. When the project is operating, turn over these records to the Engineer.

1.09 OPERATION AND MAINTENANCE MANUALS

A. Provide Operation and Maintenance Manuals in the manner described elsewhere in these specifications. In addition, organize manual and include data and narrative as noted below.

B. Provide a separate chapter for each section of the electrical specifications with subchapters for each class of equipment or system. Provide a table of contents for each chapter, and each major item in each chapter, to indicate the page number of each. Label all pages to assure correct placement in manual. Identify each piece of equipment with its associated nameplate number, i.e.: pump P-1A, etc.

C. Operating Sequence Narrative:

1. In each chapter, describe the procedures necessary for personnel to operate the system and equipment covered in that chapter.

2. Describe procedures for start-up, operation, emergency operation and shutdown of each system. If a particular sequence is required, give step-by-step instructions in that order.

3. Describe all seasonal adjustments, which should be accomplished for each system.

4. Provide the above descriptions in typewritten, simple outline, narrative form.

D. Maintenance Instructions:

1. Provide complete information for preventive maintenance for each product, including recommended frequency of performance for each preventive maintenance task.

2. Provide all information of a maintenance nature covering warranty items, etc., which have not been discussed in the manufacturer's literature or the operating sequence narrative.

3. Provide complete informational data for all the spare and replacement parts for each product and system. Properly identify each component by part number and manufacturer.

E. Manufacturers' Brochures - Include manufacturers' descriptive literature covering all products used in each system, together with illustrations, exploded views and renewal parts lists. Highlight all applicable items and instructions and mark-out non-applicable items. Brochures bearing submittal review stamp are not acceptable.

F. Shop Drawings - Provide a copy of all corrected, approved shop drawings for the project either with the manufacturers' brochures or properly identified in a separate subsection.

1.10 PERMITS & INSPECTIONS

A. CONTRACTOR shall schedule, obtain, and pay for all permit fees required by local authorities and by these Specifications.

1.11 ELECTRICAL SUPPLY

A. The electrical power utility for this project is Alaska Village Electric Cooperative (AVEC). There are NO service upgrades required for this project.

1.12 LOCATIONS

A. Damp Locations – The Water Treatment Plant in general is to be considered a Damp Location. All wiring and equipment within the facility performed under this Contract shall be minimum NEMA 4X.

B. Wet Locations - Wet locations shall include all areas underground (below grade) in concrete slab, in direct contact with the earth, areas subject to saturation with water or other liquids from splashing, surface water, wash-down of walls and floors. Components exposed to the process (i.e.: Equipment mounted on water or air piping such as instruments, solenoid valves etc.) or exposed to weather and unprotected. All wiring and equipment in these areas shall be NEMA 4X unless otherwise indicated.

C. Hazardous Locations –All wiring and equipment in identified hazardous locations shall conform to NEC Articles 500 through 504, and any other applicable article.

PART 2 - PRODUCTS – NOT USED

PART 3 - EXECUTION

3.01 CONNECTIONS TO EQUIPMENT

A. Provide electrical connections to equipment provided under various sections of these specifications. Equipment shall be wired complete in each detail, including interlocks, safety disconnects, control devices, starters, and disconnects.

B. Drawings indicate equipment as anticipated to be furnished. If equipment differing from that indicated is furnished, the furnished equipment shall be wired completely as required at no additional cost to the OWNER.

C. Connections and wiring diagrams shown on the drawings are for bidding purposes only. The CONTRACTOR shall obtain final wiring diagrams specifically for the equipment furnished from equipment suppliers.

D. Motor sizes shown on the Drawings are for bidding purposes only. The CONTRACTOR shall verify all motor sizes prior to wiring and shall provide proper motor starters, overcurrent protection, feeders and conduit for the equipment furnished at no additional cost to the OWNER.

E. Conduit and wire are shown on the drawings for bidding purposes only. The CONTRACTOR shall verify wire sizes and number of wires required, and provide the proper conduit and wire to each item of equipment at no additional cost to the OWNER.

3.02 INSTRUCTION OF OPERATING PERSONNEL

A. After the system is complete and prior to final acceptance, instruct designated personnel of the OWNER on the proper operation and maintenance of all electrical systems and equipment under this contract. This instruction shall be independent of other activities and shall <u>not</u> coincide with any start-up or testing procedures. In addition, a qualified representative of each system listed below shall instruct the designated personnel in the operation and maintenance of the associated system. Give these operating instructions after the operation and maintenance manuals have been furnished to the OWNER. Submit written certification, signed by the CONTRACTOR and an authorized representative of the OWNER, that this has been completed. This requirement shall be in addition to any others defined under this contract.

B. Coordinate with the Owner a minimum of two weeks in advance to set a mutually agreeable time to provide instruction for the following systems for at least the number of hours indicated:

SYSTEM OR EQUIPMENT	HOURS OF INSTRUCTION
Control Panels	6

C. Certify that local authorized service organization regularly carries complete stock of repair parts for listed equipment or systems, that organization is available and will furnish service within 48 hours after request. Include name, address, and telephone number.

D. Have approved operating and maintenance data and parts lists for all equipment on hand at the time of instruction.

3.03 PROJECT COMPLETION AND DEMONSTRATION

A. During final inspection, conduct operating tests for approval. Demonstrate to the Owner that the electrical installation is working by operating all electrical systems and equipment. Simulate control, standby and alarm conditions, artificially where necessary, for complete system tests.

B. Have instruments available for measuring voltage and current values and for demonstration of continuity, ground, or open circuit conditions. Furnish personnel for taking measurements and making tests.

C. Demonstrate installation to operate satisfactorily in accordance with requirements of Contract Documents. Should a portion of installation fail to meet requirements of Contract Documents, repair or replace items failing to meet requirements until items can be demonstrated to comply. Correct all shorts, open circuits, and unintentional grounds. In the event that systems are not complete and fully operational at the time of Final Inspection, all costs of any subsequent inspections, rework or repair of equipment required during or as a result of the testing shall be borne by the CONTRACTOR at no additional cost to the OWNER.

D. Thirty days prior to testing, submit to the engineer a Coordinated Test Plan and detailed Test Procedures, for review and approval. All testing shall be conducted in accordance with the manufacturer's installation and testing instructions and the applicable electrical standards (i.e., NEMA, IEEE, ISA, ANSI, or other) for the class of equipment.

E. The Test Plan shall outline the tests planned for each item of equipment. The Test Procedures shall identify the test equipment to be utilized, the action of each test step and the expected result so that a test technician who has no knowledge of the details of the equipment design shall be able to successfully conduct the test.

F. Request For Tests: Notify the ENGINEER a minimum of five days in advance of tests. In the event the ENGINEER does not witness the test, certify in writing that all specified tests have been made in accordance with the Specifications.

G. In the presence of the ENGINEER, test the equipment and electrical circuits for proper connection, continuity, and absence of undesirable shorts and grounds. Test wire and cable installation when complete and 72 hours prior to energizing the system. Check for

continuity, visual damage, marking, and proper phase sequence before performing insulation testing. Megger bus work, switches, breakers and circuits phase-to-phase and phase-to-ground. Disconnect and re-connect equipment, which cannot be meggered otherwise. The minimum acceptable steady-state value is 50 megohms. Ambient temperature and humidity during testing shall be recorded.

H. Perform a voltage test at the last outlet or load on each circuit with the design load, or its equivalent, in operation. If the drop in potential is excessive (>5%), locate the point of trouble and correct the condition.

I. Test insulation resistances of all motor windings to ground with a Megger before applying voltage to the motors. If test values are less than 5 megohms, repair or replace the motor.

J. Measure line-to-line voltage and line current of all motors, with system energized. If the measured values are not acceptably close, in the opinion of the ENGINEER in regard to the nameplate rating of the motors, correct the condition causing the deficiency.

K. Check voltage and phasing of service tie connections at switchboards. Phasing shall be maintained ABC top to bottom, left to right, and front to back.

L. Check each component of the complete system for proper performance of its intended function.

M. Test electrical equipment before it is energized and placed in service.

N. Verify operation, calibration, and settings of the meters, relays and indicating devices.

O. Check all auxiliary equipment, i.e., heaters, thermostats, lights, illuminated indicating devices and lamps, and all audible alarm devices to verify that they function properly.

P. Overload heaters shall be checked and the size on each phase shall be noted at this time on the test sheet.

Q. Report all test results in writing. Where tests disclose problem areas, retest after the defect has been corrected.

R. Operate the electrical systems until acceptance of the work. Instruct Owner's employees in the correct operation of all electrical and control systems under your jurisdiction.

S. The Contractor shall furnish to the Owner at the time the project is accepted, any special tools, calibration equipment, and testing apparatus specified or furnished by the equipment manufacturer for the proper adjustment and maintenance of the electrical equipment provided.

T. Testing for equipment under Division 26 must be completed prior to any pre-commissioning testing as required under Division 40 for controls for that equipment.

3.04 CERTIFICATE OF COMPLETION

A. Submit, at time of request for Final Inspection, a completed letter in the following format:

I,_____(Name), of _____(Firm), certify that the Electrical Work is complete in accordance with Contract Plans and Specifications, and authorized change orders (copies of which are attached hereto), and will be ready for Final Inspection as of _____(Date). I further certify that the following Specification requirements have been fulfilled:

1. Megger readings performed, ____ copies of log attached.

2. Operating manuals completed and instructions of operating personnel performed _____(Date)_____ (Signed)

ENGINEER

3. As-Built Drawings up-to-date and ready to deliver to ENGINEER.

4. Emergency systems tested and fully operational.

5. All other tests required by Specifications have been performed.

6. All systems are fully operational. Project is ready for Final Inspection.

SIGNED:_____ DATE:_____

TITLE:_____

END OF SECTION

SECTION 26 05 01

BASIC MATERIALS & METHODS

PART 1 - GENERAL

1.01 RELATED WORK SPECIFIED ELSEWHERE

A. Section 26 05 00: Common Work Results for Electrical

B. All other Division Specifications

1.02 DESCRIPTION

A. This Section describes specific requirements, products, and methods of execution which are typical throughout the Electrical Work of this Project. Additional requirements for the specific systems will be found in the Division specifying those systems.

1.03 COORDINATION

A. Layout all the work in advance and avoid conflict with other Work in progress. Physical dimensions shall be determined from Architectural and Structural plans. Verify locations for junction boxes, disconnect switches, stub-ups, etc., for connection to equipment furnished by others, or in other Divisions of this Work.

B. Coordinate chases, slots, inserts, sleeves, and openings with general construction work and arrange in building structure during progress of construction to facilitate the electrical installations that follow.

C. Sequence, coordinate, and integrate installing electrical materials and equipment for efficient flow of the Work.

D. Coordinate location of access panels and doors for electrical items that are concealed by finished surfaces.

1.04 SERVICEABILITY

A. Furnish all products to provide the proper orientation of serviceable components to access space provided.

B. Coordinate installation of all products to allow proper service areas for any items requiring periodic maintenance inspection or replacement.

C. Replace or relocate all products incorrectly ordered or installed.

1.05 ACCESSIBILITY OF PRODUCTS

A. Arrange all work to provide access to all serviceable and/or operable products. Layout work to optimize net usable access space within confines of space available. The

Contractor shall advise the Engineer, in a timely manner, of areas where proper access or required clear space cannot be maintained. Furnish Layout Drawings to verify this claim, if requested.

B. Provide access doors in ceilings, walls, floors, etc., for access to J-boxes, automatic devices, and all serviceable or operable equipment in concealed spaces.

PART 2 - MATERIALS AND EQUIPMENT

2.01 PRODUCTS FURNISHED IN DIVISION 26

A. All products furnished and installed in permanent construction shall be new, full-weight, standard in every way, and in first class condition.

B. All equipment furnished by the CONTRACTOR shall be listed by and shall bear the label of Underwriters' Laboratories, Incorporated (UL), or an independent testing laboratory acceptable to the local Code enforcement agency having jurisdiction. Acceptable laboratories / manufacturers include Edison Test Labs (ETL), Canadian Standards Association (CSA) with NRTL label.

C. Products shall be identical with apparatus or equipment, which has been in successful operation for at least two years. All products of similar class or service shall be of one manufacturer.

D. Capacities, sizes, and dimensions given are minimum unless otherwise indicated. All systems and products proposed for use on this project shall be subject to review for adequacy and compliance with Contract Documents.

2.02 PRODUCTS FURNISHED IN OTHER DIVISIONS

A. Controls, including conduit, wiring, and control devices required for the operation of systems furnished in other Divisions shall be installed in accordance with Division 1, 26, and 40 Specifications.

B. All equipment furnished by the CONTRACTOR shall be listed by and shall bear the label of Underwriters' Laboratories, Incorporated, (UL) or an independent testing laboratory acceptable to the local Code enforcement agency having jurisdiction. Acceptable laboratories/ manufacturers include Edison Test Labs (ETL), Canadian Standards Association (CSA) with NRTL label.

C. All work on the project that falls under the jurisdiction of the electrical trade shall be performed under the supervision of Licensed Electricians in possession of Alaska State Fitness Cards in conformance with the Electrical Specifications.

D. Provide complete power connections to equipment, including but not limited to: feeders, disconnects and motor running overcurrent protection. Where starters are provided as part of a packaged product, overcurrent heaters shall be provided.

2.03 IDENTIFICATION

A. Equipment Labels and Nameplates:

1. Provide rigid engraved labels and nameplates of laminated plastic 1/16 inch thick with white letters on a black or gray background. Label for emergency equipment shall be red with white letters.

a. Securely attach labels with two screws or two rivets, minimum, per label.

b. Temporary markings not permitted on equipment. Repaint trims, housings, etc., where markings cannot be readily removed. Refinish defaced surfaces.

c. No labeling abbreviations will be permitted without prior approval.

2. Label and Nameplate Locations:

a. Provide 1/2" minimum height letters on the following equipment:

1). Service disconnects (red background).

2). Secondary feeder breakers in distribution equipment. Designation as required by load served.

3). Special equipment housed in cabinets, as designated on plans, on outside of door.

4). Panelboards, switchboards, motor control centers, as designated on plans, on outside of door.

b. Provide 1/4" minimum height letters on:

1). Disconnects and starters for motors or fixed appliances - (Include item designation and branch feeder circuit number); and

2). Designated electrical equipment.

B. Branch Circuit Panelboard Schedules: Provide neatly typed schedule (odd numbered circuits on left side or top, even numbered circuits on right side or bottom) under plastic jacket or protective cover to protect the schedule from damage or dirt. Securely mount on inside face of panelboard door. Define briefly, but accurately, nature of connected load (i.e. Lighting; interior receptacles, work bench; etc.) as approved.

C. Empty Conduits: Provide tags with typed description of purpose and location of opposite end, wired to each end of conduits provided for future equipment.

D. Conduits: Provide tags with typed description of purpose and location of opposite end, to each end of conduits provided. Identify raceways and cables with color banding as follows:

1. Bands: Pre-tensioned, snap-around, colored plastic sleeves or colored adhesive marking tape. Make each color band 2 inches (51 mm) wide, completely encircling conduit, and place adjacent bands of two-color markings in contact, side by side.

2. Band Locations: At changes in direction, at penetrations of walls and floors, at 50-foot (15-m) maximum intervals in straight runs, and at 25-foot (8-m) maximum intervals in congested areas.

E. Junction Boxes: Provide tags with typed description showing the circuit numbers of wiring in all junction boxes provided.

F. Conductors

1. Branch circuit conductors shall be color coded as indicated in Section 26 05 19.

2. Control and alarm circuit conductors shall be identified by a numbering system provided by the CONTRACTOR. The numbering system shall assign each conductor a unique identification.

G. Terminal blocks: Provide identification strips for all terminal blocks, marked in compliance with the applicable drawings. Identify wiring at terminal blocks to match the associated terminal block.

H. Underground Warning Tape: Permanent, bright-colored, continuous-printed, vinyl tape with the following features:

1. Not less than 6 inches wide by 4 mils thick (150 mm wide by 0.102 mm thick).

2. Compounded for permanent direct-burial service.

3. Embedded continuous metallic strip or core.

4. Printed legend that indicates type of underground line.

PART 3 - EXECUTION

3.01 STORAGE AND HANDLING

A. All items shall be delivered and stored in original containers, which shall indicate manufacturer's name, the brand, and the identifying number. Items subject to moisture and/or thermal damage shall be stored in a dry, heated place. All items shall be covered and protected against dirt, water, chemical and/or mechanical damage.

3.02 PROTECTION OF PRODUCTS

A. The Contractor shall be held responsible for products to be installed under this Contract. The Contractor will be required to make good, at his own cost, any loss or damage, which said products may sustain before Final Acceptance.

3.03 INSTALLATION

A. All products shall be installed by skilled craftsmen. The norms for execution of the work shall be in conformity with NEC Chapter 3 and the NECA "Standards of Installation," which herewith is made part of these Specifications.

B. Working Space And Required Clearances About Electric Equipment (600 VOLTS, NOMINAL, OR LESS):

1. Sufficient access and working space shall be provided and maintained about all electric equipment to permit ready and safe operation and maintenance of such equipment.

2. Working Clearances: Except as elsewhere required or permitted in the NEC, the dimension of the working space in the direction of access to live parts operating at 600 volts, nominal, or less and likely to require examination, adjustment, servicing, or maintenance while energized shall not be less than indicated in NEC table 110-26(a). Distances shall be measured from the live parts if such are enclosed. Concrete, brick, or tile walls shall be considered as grounded. In addition to the dimensions shown in the table, the workspace shall not be less than 30 inches wide in front of the electric equipment.

3. CLEAR SPACES: Working space required by this section shall not be used for storage. When normally enclosed live parts are exposed for inspection or servicing, the working space, if in a passageway or general open space, shall be suitably guarded.

C. Repair all surfaces and furnish all required products and labor to maintain fireproof, airtight and waterproof characteristics of the construction.

D. Installation of all equipment shall be in accordance with manufacturer's instructions.

3.04 MOUNTING HEIGHTS

A. Mounting heights shall be above finished floor (AFF) as noted below, unless otherwise shown or indicated.

1. Mounting heights are indicated on the Drawings by detail. Specific dimensions AFF are shown adjacent to the symbol.

3.05 CUTTING AND PATCHING

A. Obtain written permission from the Engineer before cutting or piercing structural members.

B. Sleeves through floors and walls to be galvanized iron pipe, flush with walls, ceilings or finished floors, sized to accommodate the raceway. Grout all penetrations through concrete walls or floors. Holes through existing concrete shall be core drilled.

C. Repair and refinish disturbed finish materials and other surfaces to match adjacent undisturbed surfaces. Install new fireproofing where existing fire stopping has been disturbed. Repair and refinish materials and other surfaces by skilled mechanics of trades involved.

3.06 PROTECTIVE FINISHES

A. Take care not to scratch or deface factory finish on electrical apparatus and devices. Repaint all marred or scratched surfaces.

B. Provide hot dip galvanized components for ferrous materials exposed to the weather or damp/wet environments.

3.07 TESTING

A. Prior to final test, all switches, panelboards, devices, and fixtures shall be in place.

B. Test all electrical systems in accordance with Specifications.

C. Make all changes necessary to balance the connected electrical loads on the complete system. Arrange for balanced conditions of circuits under connected load demands, as contemplated by the normal working conditions. Final load and balance test shall be demonstrated in the presence of the Engineer.

D. Furnish one copy of certified test results to the Engineer prior to Final Inspection.

3.08 CLEAN-UP AND COMMISSIONING

A. Throughout the Work, the Contractor shall keep the work area reasonably neat and orderly by periodic clean-ups.

B. As independent parts of the installation are completed, they may be commissioned and utilized during construction.

END OF SECTION

SECTION 26 05 19

LOW-VOLTAGE ELECTRICAL POWER CONDUCTORS AND CABLES

PART 1 - GENERAL

1.01 RELATED WORK ELSEWHERE

A. Section 26 05 00: Common Work Results for Electrical

B. Section 26 05 01: Basic Materials and Methods

1.02 DESCRIPTION

A. This Section describes specific requirements, products, and methods of execution relating to Low-Voltage Electrical Power Conductors and Cables, 600 Volts or less, approved for use on this project.

1.03 QUALITY ASSURANCE

A. All conductors shall be sized according to American Wire Gauge (AWG). Stranding, insulation, rating and geometrical dimensions shall conform to Underwriters Laboratory Specifications.

PART 2 - MATERIALS AND EQUIPMENT

2.01 SERVICE WIRING

A. No service wiring is required on this project.

2.02 FEEDER AND BRANCH CIRCUIT WIRING

A. Insulation shall be 600 Volt type THWN-2 (Interior), or XHHW-2 (Exterior or interior). Wiring in fixture channels shall be rated 90°C. or over, 600 Volt. Do not install thermoplastic insulated conductors when the temperature is below 0°F.

2.03 FLEXIBLE CORD

A. All flexible cord shall be type SO or ST or for larger size cable, type G.

2.04 TYPE TS CABLE

A. Single pair and triad twisted-instrument cable shall be 300-volt, 90°C conductor temperature, 18-gauge stranded copper with heat- and moisture-resistant PVC insulation, drain wire and overall PVC jacket. Individual pairs or triads shall be provided with an aluminum-mylar shield.

2.05 MISCELLANEOUS

A. Miscellaneous Low-Voltage Electrical Power Conductors and Cables for special purpose applications and not covered in the categories as indicated above, shall be as shown on the plans and/or as required by the manufacturer for intended use.

2.06 MINIMUM SIZE

A. Unless specified otherwise, minimum wire sizes shall be as follows:

1. All 120V homeruns over 75 ft: #10 AWG

2. Branch circuit wiring: #12 AWG

3. Control circuit wiring: #14 AWG

4. Low voltage circuits if a part of an approved cable assembly; #20 AWG (#16 AWG otherwise)

5. Cable or conductors for other special systems shall be as described in other Sections of the Specifications, noted on the Drawings, or recommended by the equipment manufacturer.

2.07 CONDUCTORS

A. All conductors used on this project shall be stranded copper.

B. Conductors shall have compression terminations where terminated on screw terminals.

PART 3 - EXECUTION

3.01 INSTALLATION

A. Conduit shall be completely installed, free from obstructions, and clean before installing conductors. Provide conductors from outlet to outlet and splice only at outlet or junction boxes. Install all conductors in a single raceway at one time and leave sufficient cable at all fittings or boxes. Keep minimum bending radii. Lubricants for wire pulling, if used, shall conform to UL requirements for the insulation and raceway material.

3.02 CONDUCTOR SUPPORT

A. Provide conductor supports as recommended by the NEC or cable manufacturer in vertical conduits.

3.03 SPLICING

A. No splicing or joints will be permitted in either feeder or branch circuits except at outlet or accessible junction boxes. Utilize compression type, solderless connectors when making splices or taps in conductors # 8 AWG or larger. Utilize pre-insulated connectors, 3M Company "Scotchlok" or Ideal Industries, Inc. "Super Nut" for splices

and taps in conductors # 10 AWG and smaller. Tape all splices and joints with Scotch #88 plastic tape to secure insulation strength equal to that of the conductors joined.

3.04 CONDUCTOR TERMINATION

A. Stranded Conductors

1. Provide all power, control, communication and alarm conductors that terminate on equipment or terminal strips with compression type solderless lugs. T and B "Sta-Kon" terminals, or approved equal.

3.05 CONDUCTOR PHASE COLOR CODING

A. All service, feeder and branch circuit conductors throughout the project's secondary electrical system shall be color coded as follows:

1. Phase 480Y/277 VAC

A	Brown
B	Orange
C	Yellow
Neutral	Gray
Ground	Green/Bare

2. Phase 208Y/120 VAC

A	Black
B	Red
C	Blue
Neutral	White
Ground	Green/Bare

B. Where color code conductors are not commercially available, colored non-aging plastic tape may be utilized in accordance with the National Electrical Code.

C. Phases in panelboards and similar equipment shall be connected Phase A, B, C, from left to right, top to bottom, or front to back.

END OF SECTION

SECTION 26 05 26

GROUNDING AND BONDING FOR ELECTRICAL SYSTEMS

PART 1 - GENERAL

1.01 RELATED WORK SPECIFIED ELSEWHERE

A. Section 26 05 00: Common Work Results for Electrical

B. Section 26 05 01: Basic Materials and Methods

1.02 DESCRIPTION

A. This Section describes general requirements, products, and methods of execution relating to the furnishing and installation of a grounding system.

1.03 REQUIREMENTS

A. The requirement for the Grounding Electrode System (GES) shall conform to Article 250 of the NEC.

1.04 SPECIAL REQUIREMENTS

A. Unless specified elsewhere, the ohmic values for grounds and grounding systems shall be as follows:

1. For grounding metal enclosures and frames for electrical and electrically operated equipment: 5 ohms maximum.

2. For grounding systems to which electrical utilization equipment and appliances are connected: 5 ohms maximum.

3. For grounding secondary distribution systems, neutrals, noncurrent carrying metal parts associated with distribution systems, and enclosures of electrical equipment not normally within reach of other than authorized and qualified electrical operating and maintenance personnel: 10 ohms maximum.

4. For equipment not covered in the above: 10 ohms maximum

PART 2 - MATERIALS AND EQUIPMENT

2.01 EQUIPMENT

A. All ground rods and conductors for ground systems shall be as follows:

1. Ground rods to be 3/4" x 10' copper clad steel.

2. Conduit used for mechanical protection shall be Schedule 40- PVC. Metallic conduit shall not be used for single wire ground circuits unless both ends are securely bonded.

2.02 CONNECTIONS

A. Joints in grounding conductors and mats below grade shall be made with solderless compression connections or with AMPACT TAP equipment. Terminations above grade shall be made with solderless lugs, securely bolted in place. Terminations below grade shall be made using an exothermic welding method.

PART 3 - EXECUTION

3.01 EQUIPMENT GROUND

A. The raceway system shall be bonded in conformity with NEC requirements to provide a continuous ground path. An additional grounding conductor sized in conformity with the NEC shall be installed in each raceway.

B. Provide separate grounding conductor securely bonded and effectively grounded to both ends of all non- metallic raceways and all flexible conduit.

END OF SECTION

SECTION 26 05 29

HANGERS AND SUPPORTS FOR ELECTRICAL SYSTEMS

PART 1 - GENERAL

1.01 DESCRIPTION

A. Related Work Specified Elsewhere.

1. Section 26 05 33: Raceway and Boxes for Electrical Systems

2. Section 26 05 34: Outlet Boxes.

B. Description of System.

1. Support and align raceways, cabinets, boxes, fixtures, etc., in an approved manner and as specified.

PART 2 - MATERIALS AND EQUIPMENT

2.01 MATERIAL

A. Support raceways and enclosures on approved types of wall brackets, ceiling trapeze hangers, or malleable iron straps.

1. “Kindorf", "Unistrut", or equal.

2. Plumbers perforated strap is not permitted as means of support.

3. Use Stainless steel supports and hardware in wet locations.

4. Galvanized steel support in damp locations.

5. Provide end caps on all exposed corners and edges of supports and fittings.

B. Material: Cold-formed steel, with corrosion-resistant coating.

C. Metal Items for Use Outdoors or in Damp Locations: Hot-dip galvanized steel.

D. Slotted-Steel Channel Supports: Flange edges turned toward web, and 9/16-inch- (14-mm-) diameter slotted holes at a maximum of 2 inches (50 mm) o.c., in webs.

1. Channel Thickness: Selected to suit structural loading.

2. Fittings and Accessories: Products of the same manufacturer as channel supports.

E. Raceway and Cable Supports: Manufactured clevis hangers, riser clamps, straps, threaded C-clamps with retainers, ceiling trapeze hangers and wall brackets.

F. Expansion Anchors: Carbon-steel wedge or sleeve type.

G. Toggle Bolts: All-steel springhead type.

H. Powder-Driven Threaded Studs: Heat-treated steel.

I. Earthquake Anchorages.

1. Anchor equipment weighing more than 100 pounds to the building structure to resist lateral earthquake forces.

2. Total lateral (earthquake) force shall be 1.00 times the equipment weight acting laterally in any direction through the equipment center of gravity. Provide adequate backing at structural attachment points to accept the forces involved.

3. Provide equipment supported by flexible isolation mounts with earthquake restraining supports positioned as close to equipment as possible without contact in normal operation (earthquake bumpers). The maximum lateral displacement due to the computed earthquake force from above shall not exceed 1.5 inches. Floor mounted equipment weighing less than 2000 pounds may have one 6 x 6 x 3/8 x 18 inch steel angle bolted to the floor with four 5/8 inch diameter bolts placed on each of four sides of the equipment.

PART 3 - EXECUTION

3.01 INSTALLATION

A. Pipe straps and hanger rods shall be fastened to concrete by means of inserts, expansion bolts, or powder-driven fasteners, and to hollow masonry by means of toggle bolts.

B. Cable trays, multi-conduit runs, etc., shall be supported by double rods at each point of support and be supported independently of any other building system.

C. Secure boxes, wall brackets, cabinets, and hangers by means of toggle bolts in gypboard and masonry CMU and wood screws in wood construction. Obtain permission before using any type of powder-powered studs.

END OF SECTION

SECTION 26 05 33

RACEWAY AND BOXES FOR ELECTRICAL SYSTEMS

PART 1 - GENERAL

1.01 WORK SPECIFIED ELSEWHERE

A. 26 05 00 – Common Work Results for Electrical

B. 26 05 01 – Basic Materials and Methods

1.02 DESCRIPTION

A. This section describes specific requirements, products, and methods of execution relating to conduit and conduit fittings approved for use on this project. Type, size and installation methods shall be as shown on Drawings, required by Code and specified in these Specifications.

1.03 QUALITY ASSURANCE

A. Conduit and conduit fittings shall be standard types and sizes as manufactured by a nationally recognized manufacturer of these types of materials, and be in conformity with applicable standards and UL listings.

1.04 SUBMITTALS

A. Shop drawings and product data: Submit shop drawings and product data for the products of this section in compliance with Section 26 05 00.

PART 2 - MATERIALS AND EQUIPMENT

2.01 GALVANIZED RIGID CONDUIT (GRC)

A. Galvanized rigid conduit shall be mild steel with continuous welded seam, hot-dip galvanized complying with ANSI C80.1 and shall be UL listed.

B. Elbows, bends, and fittings shall be made of full weight materials complying with the above and shall be coated and threaded the same as conduit.

C. Threads for conduit shall be tapered and clean cut. All factory threads shall be hot dip galvanized after cutting.

D. Conduit shall be 1/2-inch trade size or larger and shall be manufactured by Allied Tube and Conduit Corp., Triangle PWC, Inc., or approved equal.

2.02 LIQUIDTIGHT FLEXIBLE METAL CONDUIT

A. Liquidtight flexible conduit shall be manufactured from galvanized steel strip, sealed with a polyvinyl outer jacket and shall be UL listed.

B. Fittings shall be designed for use with liquidtight flexible conduit and shall maintain electrical continuity throughout fittings and conduit.

C. Liquidtight flexible metal conduit shall be 1/2-inch trade size or larger and shall be manufactured by O-Z/Gedney Co., Southwire Co., or approved equal.

2.03 FLEXIBLE EXPLOSION PROOF CONDUIT (COUPLINGS)

A. Flexible explosion proof conduit shall be manufactured from braided steel or copper alloy with inner insulating liner.

B. Fittings shall be threaded.

C. Flexible explosion proof conduit shall be 1/2-inch trade size or larger and shall be manufactured by Crouse-Hinds "Series EC," Killark "Series EKJ," or equal.

2.04 FITTINGS

A. Expansion fittings shall be Crouse Hinds type XJ; O.Z. type AX, EX, EXDS, TX, or EXE; or approved equal.

B. Fittings utilized with rigid steel and aluminum shall be galvanized steel. Conduit bushings shall be of the insulated type. Where grounding bushings are required, insulated grounding bushings with pressure type lugs shall be provided. Lock rings on non-hub terminations shall be of the ‘gland’ type.

C. Fittings for liquid-tight flexible conduit shall be steel or malleable iron, of a type incorporating a threaded grounding cone, nylon or plastic compression ring, and a tightening gland, providing a low resistance ground connection. All throats shall be insulated.

PART 3 - EXECUTION

3.01 CONDUIT USAGE

A. Galvanized rigid conduit shall be used for all interior and exterior general wiring, except as otherwise specified herein or indicated on the drawings.

B. Liquidtight flexible steel conduit shall be used in lengths 18 to 24 inches for connections to motors or equipment subject to vibration. Longer lengths may be used for equipment connection if grounding conductor is installed through conduit, with prior approval of the Engineer.

3.02 CONDUIT INSTALLATION, GENERAL

A. Install conduit in buildings exposed, except specifically designed runs indicated on the drawings to be embedded in concrete slabs or walls.

B. Conduit field joints shall be cut square and reamed smooth. Threads shall be cleanly cut and joints drawn up tight. After make-up, all exposed, non-galvanized surfaces of completed joint shall receive two coats of zinc-rich paint equal to "Zinc it", manufactured by CRC. No running threads will be permitted.

C. Offsets and bends shall be made carefully, without reducing cross sectional area, and shall not be less than the radius of standard elbows.

D. Devices located on walls shall be serviced from above, unless otherwise indicated.

E. Install expansion fittings where conduits cross building expansion joints.

F. Provide gastight and watertight seals at all underground building entries. Provide seals between wall and conduit and between conduit and conductors.

G. Raceways penetrating vapor barriers, exterior building walls or traversing from warm to cold areas shall be sealed (at the penetration point) with a non-hardening duct sealing compound to prevent the accumulation of moisture. Concrete grout shall be used to seal all voids around raceway penetrations of concrete walls.

H. All metal conduits shall have insulating bushings and shall have locknuts inside and outside of enclosure box, etc. Conduits smaller than 1-1/4-inch trade size shall be equipped with bushings and shall have locknuts inside and outside of enclosure.

I. All conduit runs shall be grounded in an effective and approved manner at point of origin and shall maintain a continuous ground throughout all runs, cabinets, pull boxes, and fittings from point of service to all outlets.

J. All conduit stubbed up out of the floor and terminated inside of an enclosure shall have insulating grounding bushings installed.

K. Conduits concealed in concrete shall be secured in place during placing of concrete.

L. Conduit Supports:

1. Support conduits by wall brackets, pipe straps, or trapeze hangers spaced not more than eight (8) feet on center.

2. Conduits shall be supported from the structural system, not from the ceiling ductwork, or piping suspension systems. Provide additional support as required for junction and pull boxes.

3. Support single conduits 1-1/4-inch trade size and larger by means of rods and cast ring hangers. Support multiple runs in a similar manner or use a common trapeze

hanger as required for span and loading. Provide end caps for trapeze type hangers in mechanical rooms. Conduit trapeze hangers may be fastened by means of approved heavy strap supports.

4. Conduits surface mounted on walls up to a height of eight (8) feet above the floor shall be supported by two-hole galvanized malleable pipe straps. Secure supports by means of toggle bolts, inserts, or expansion bolts.

M. All conduit runs shall be completed and cleaned free from foreign matter inside before conductors are drawn in. After installation, conduit ends shall be plugged or capped to prevent the entrance of foreign materials.

N. Install exposed raceways parallel or at right angles to nearby surfaces or structural members and follow surface contours as much as possible. Run parallel or banked raceways together on common supports. Make parallel bends in parallel or banked runs. Use factory elbows only where elbows can be installed parallel; otherwise, provide field bends for parallel raceways.

O. All conduits not used by this Contract shall have a pull wire installed and securely tied off at each end for future conductor installation.

P. All conduit run underground shall be buried a minimum of 24” below grade.

Q. All raceways passing from hazardous to non-hazardous areas shall have a seal-off fitting installed within 18” of either side of the hazardous location boundary. No other fitting is allowed between the seal-off fitting and the boundary.

END OF SECTION

SECTION 26 05 34

OUTLET BOXES

PART 1 - GENERAL

1.01 RELATED WORK SPECIFIED ELSEWHERE

A. Section 26 05 00: Common Work Results for Electrical

B. Section 26 05 01: Basic Materials and Methods

1.02 DESCRIPTION

A. This section describes general requirements, products and methods of execution relating to outlet boxes for use with wiring devices approved for use on this project. All boxes shall be sized per NEC Article 314.

1.03 QUALITY ASSURANCE

A. UL approval for intended usage shall constitute proof of acceptable quality.

PART 2 - MATERIALS AND EQUIPMENT

2.01 CAST BOXES

A. Boxes equipped with mounting lugs, threaded hubs and gasketed covers shall be used in the following locations:

1. All exterior locations;

2. All wet or damp locations;

3. Where exposed to mechanical damage;

4. All exposed interior locations below 48" above floor;

5. Where shown on Drawings.

6. In classified hazardous locations. Boxes shall be UL listed for the Class and Group of the hazardous location.

2.02 ACCESSORIES

A. Box covers, extension rings, bases, hanger bars, etc., for use in connection with the installation, shall be approved for use in the various applications.

PART 3 - EXECUTION

3.01 INSTALLATION

A. Outlet Boxes shall be securely fastened in position and supported independently of the conduit system.

B. Boxes shall be installed true to the building lines and at equal heights in conformity with mounting heights specified elsewhere in other Sections of the Specifications.

C. Provide the best suitable box for each outlet requirement.

D. Boxes shall have only the holes necessary to accommodate the conduits at point of installation. All boxes shall have lugs or ears to secure covers.

E. All boxes shall be accessible.

END OF SECTION

SECTION 26 05 35

PULL AND JUNCTION BOXES

PART 1 - GENERAL

1.01 RELATED WORK SPECIFIED ELSEWHERE

A. Section 26 05 00: Common Work Results for Electrical

B. Section 26 05 01: Basic Materials and Methods

C. Section 26 05 34: Outlet Boxes

1.02 DESCRIPTION

A. This Section describes general provisions, products and methods of execution relating to pull and junction boxes approved for use on this project. Furnish all such boxes, whether shown or not, in order to conform to requirements for maximum pulling length and maximum number of bends allowed.

1.03 QUALITY ASSURANCE

A. Pull and junction boxes 150 cubic inches and smaller shall conform to Section 26 05 34.

B. Pull and junction boxes larger than 150 cubic inches shall conform to Underwriters Laboratory (UL) standard 50-1970, Cabinets and Boxes. The UL label shall constitute proof of acceptable quality.

PART 2 - MATERIALS AND EQUIPMENT

2.01 GENERAL

A. All pull and junction boxes shall conform to Article 314 of the NEC and the following requirements:

1. Boxes exposed to rain or installed in damp or wet locations shall be NEMA 4X, metallic, or as noted.

2. Boxes installed underground shall be either precast concrete or cast iron.

3. Special boxes, as noted on the Drawings, shall be installed in areas of specific service and/or hazards.

PART 3 - EXECUTION

3.01 INSTALLATION

A. All boxes shall be installed so that covers are readily accessible and adequate working clearance is maintained after completion of the installation.

END OF SECTION

SECTION 26 24 19

LOW VOLTAGE MOTOR CONTROL CENTERS

PART 1 - GENERAL

1.01 THE REQUIREMENT

A. The requirements of Section 26 05 00 – Common Work Results for Electrical applies to the WORK of this Section.

1.02 QUALITY ASSURANCE

A. General: All materials shall be inspected for compliance with Section 26 05 00 – Common Work Results for Electrical.

B. Modifications to an existing MCC shall be field evaluated to UL 845 and any other applicable standard as required by the components comprising the modified assembly. Individually listing MCC "buckets" to UL 508A is not acceptable.

C. Factory Tests: Design test reports conducted on similar assemblies at the factory testing facilities shall be submitted.

1.03 WARRANTY

A. The system warranty shall be no less than one year after initial startup and shall include all costs for repair, parts, travel and living expenses, and labor.

1.04 OPERATION AND MAINTENANCE

A. The CONTRACTOR shall submit operation and maintenance procedures for each piece of new equipment to be installed in the MCCs for the ENGINEER's review. The data sheets shall be supplemented by written text and shall include the following:
   1. Operating procedures.
   2. Maintenance procedures.
   3. Manufacturers' parts list, illustrations, assemblies, and diagrams.

1.05 CONTRACTOR SUBMITTALS

A. General: Submittals shall be in accordance with Division 01.

B. Shop Drawings
   1. Enclosure NEMA rating and color
   2. Horizontal and vertical bus ampacities, voltage rating and interrupting capacity. Include materials of construction
   3. Ground bus size and material of construction

4. Conduit entrance provisions
5. Main incoming line entry provision (top or bottom)
6. Control unit nameplate schedule
7. All circuit breaker types, frames and settings
8. All starter NEMA sizes, auxiliary contact provisions, coil voltage
9. Relays, timers, pilot devices, control transformer VA and fuse sizes
10. Elementary schematic ladder diagrams for each compartment of new work. Custom schematics shall be furnished. Diagrams shall include all remote devices. Submittals with drawings not meeting this requirement will not be reviewed further and will be returned to the CONTRACTOR stamped "REJECTED-RESUBMIT."
11. Short circuit rating of the complete assembly
12. Replacement parts lists and operation and maintenance procedures
13. Seismic design certification of the anchoring system in accordance with Section 26 05 00.
14. Time-current curves for all protective devices

PART 2 - PRODUCTS

2.01 GENERAL

A. Devices of the same type shall be products of the same manufacturer.

B. Motor control centers shall conform to the standards for NEMA Class IIS, type B diagrams and wiring. All equipment within the MCC shall be front accessible.

C. The MCC shall contain all items and accessories required for a complete working system.

2.02 DESIGN, CONSTRUCTION, AND MATERIAL REQUIREMENTS

A. Size and Arrangement
1. Equipment within the MCC may be rearranged at the discretion of the manufacturer, providing the MCC provides the spares, space, and future provisions indicated. All modifications to the MCC shall be relisted to UL standards in accordance with this Specification.
2. All switches and circuit breakers used as switches shall be located so that the center of the grip of the operating handle of the switch or circuit breaker, when in its highest position, will not be more than 6-feet 7-inches above the floor, including the height of the concrete pad.

B. Cabinet
1. Control units inside compartments shall be clearly identified with tags or stencil markings.
2. Each control unit including spares, spaces and blanks, lights, and devices shall

be identified by an engraved nameplate. Identification shall include circuit number as indicated.

3. Fans, heat exchangers, transformers, capacitors, junction boxes, or other devices may not be mounted on the outside of the motor control center enclosure.

C. Control Wiring:

1. All control wiring shall be brought to identified terminal blocks; every cubicle containing control wiring which extends to other cubicles shall have terminal blocks. Connection made on terminal blocks and on internal devices shall be by means of locking spade-type pre-insulated terminals.
2. Control and secondary wiring shall be 600 V flame-retardant switchboard-type, minimum size No. 14 AWG stranded, tinned copper. Hinge wiring shall be extra-flexible stranding.

D. Terminal Blocks

1. Terminal blocks for all external control connections shall be 600-volt, barrier type, having a minimum rating of 20 amps with marker strips identifying all internal and external wiring.
2. Terminal blocks for current transformer secondary connections shall be of the short-circuiting type. One 4-pole block shall be used for each current transformer set.

E. Instrument Transformers

1. Current Transformers: The quantity and ratio of current transformers shall be as indicated. Current transformers shall have thermal and mechanical ratings and insulation class not less than those of the associated circuit breakers. Current transformers shall be mounted in such a way as to provide easy access for inspection and maintenance.
2. Provide test blocks and plugs for current and potential circuits for the main breaker(s).

F. Nameplates

1. Nameplates shall be provided for front and rear face of each cubicle and for major devices thereon, such as meters, instruments, control switches, and relays.
2. Nameplates shall also be provided for major internal devices such as relays, instrument and control power transformer, fuse blocks, switches, and transformers.
3. Cubicle nameplates shall be 3-layer laminated phenolic plastic, black background, engraved to show white lettering.
4. Lettering shall be upper case as follows:
   a. 1-inch high for switchgear identification.
   b. 7/16-inch high for compartment identification.
   c. 1/8-inch high for component nameplate.
5. Thickness

a. Nameplates 1-1/2 inches tall and smaller shall be 1/16-inch thick.

b. Nameplates larger than 1-1/2 inches tall shall be 1/8-inch thick.

6. Edges of nameplates shall be beveled.

G. Surface Preparation, Painting, and Cleanliness

1. All disrupted or damaged surfaces shall be finish painted light gray No. 61 to match the existing finish.

2.03 FULL VOLTAGE NON-REVERSING (FVNR) MOTOR STARTERS

A. Motor starters shall be mounted in standard motor control center assemblies, arranged as indicated.

B. Each motor starter unit shall consist of a combination magnetic contactor and short circuit protective device, mounted in a completely enclosed cubicle. Short circuit protective device shall be an instantaneous, magnetic only circuit breaker, **Cutler-Hammer Type HMCP**, or equal. All circuit breakers provided as part of a motor starter unit shall be capable of being padlocked in the open position.

C. Each starter unit shall have its own control power transformer. It shall have a 120-volt grounded secondary. One secondary fuse and two primary fuses shall be provided. Control power transformers shall be sized to accommodate the control devices indicated. Local control devices shall be mounted independently of the cover door. All starters shall have a local green "running" lamp. Starters shall be provided with hand/off/auto selector switches, and other devices as indicated. All cubicle control wires shall be terminated at a pull apart disconnecting terminal block at the cubicle.

D. The motor control center manufacturer shall be responsible for identifying each control wire within each motor starter unit with wrap-around permanent plastic markers. Each control wire shall be identified at both ends.

E. Full voltage motor starter units shall be NEMA Size 1 or larger. Each combination starter shall be rated for a minimum 25,000 RMS symmetrical amperes.

F. Motor starters shall be designed to NEMA ratings. Only starters designed to IEC ratings or with dual IEC/NEMA ratings are acceptable as soft-start bypass contactors.

G. Motor Starters shall be Cutler-Hammer Advantage series, matching the manufacturer of the motor control center.

2.04 REDUCED VOLTAGE SOLID STATE (RVSS) MOTOR STARTERS

A. RVSS starter assemblies shall be UL-listed and shall consist of

1. an incoming power circuit breaker,
2. a power section,
3. logic board,

4. protective fusing, and
5. Paralleling bypass contactor to be energized when the starter reaches full voltage.

B. In addition, MCC installation of RVSS starters shall meet all of the applicable requirements listed in 2.3 above.

C. RVSS starters shall include adjustments for starting torque, acceleration rate control by voltage ramps, and current limit.

D. Output contactors shall be provided where indicated.

E. RVSS Starters shall be in accordance with Section 26 29 13.16 Reduced-Voltage Motor Controllers.

2.05 MAIN AND FEEDER CIRCUIT BREAKERS (480/240/208-VOLT)

A. Circuit breakers having a frame size of 150 amps or less shall be molded-case type with thermal magnetic non-interchangeable, trip-free, sealed trip units.

B. Circuit breakers with a frame size of 225 amps to 1,200 amps shall be molded case with RMS sensing electronic trip elements.

C. The interrupting capacity of all main, and feeder branch circuit breakers shall be a minimum of 25,000 RMS symmetrical amperes.

D. Circuit breaker disconnect operators shall be capable of accommodating three padlocks for locking in the "open" position.

E. Provide neutral pad or neutral bar for future 4-Wire WYE service.

2.06 TRANSFORMERS

A. All indoor transformers shall be dry-type and shall conform to or exceed the requirements of the latest applicable IEEE, NEMA and ANSI standards. Transformers rated 3 kVA and below shall be insulated with 80-degree C insulation; 5 to 30 kVA with 115-degree C insulation.

B. Transformers rated 15 kVA and above shall have 4 2-1/2 percent taps, 2 above and 2 below 480 volts. Transformers shall be enclosed within the MCC.

C. Isolation transformers shall be designed to lessen effects of transient generation into the supply power and shall act as a buffer for SCR current surges. Transformers shall have full capacity taps 4 2-1/2 percent taps, 2 above and 2 below primary windings. Transformers shall have a 150 degree C insulation and shall be UL listed.

2.07 CONTROL DEVICES

A. Provide solid state type metering where indicated. Include CTs of ratios as indicated.

2.08 SWITCHBOARD MATTING

A. Where called for on the drawings, Switchboard matting shall be high-voltage, 1/4-inch thick, 36 inches deep, the full width of the MCC, and shall be Model M36 as manufactured by **W.H. Salisbury & Co.**, or equal.

2.09 FACTORY TESTS

A. All motor control centers and their components shall be given manufacturer's standard electrical and mechanical production tests and inspections. The tests shall include electrical continuity check, dielectric tests for each circuit, and inspection for proper functioning of all components including controls, protective devices, metering, and alarm devices.

2.010 SPARE PARTS

A. The CONTRACTOR shall furnish the following for each MCC:
   1. Three bezels of each color installed for pilot indicators
   2. One dozen panel lamps
   3. One dozen control fuses of each size installed

B. Spare parts shall be identified by MCC number, type, size, and manufacturer.

PART 3 - EXECUTION

3.01 GENERAL

A. Motor control centers shall be handled carefully to avoid damage to motor control center components, enclosure, and finish. Damage shall be repaired before acceptance of completed work.

B. Existing MCCs shall be modified, as shown on the drawings. All modifications to MCCs shall be relisted in accordance with this Specification.

3.02 INSTALLATION

A. The CONTRACTOR shall:
   1. Install required circuit breakers, motor starters and ancillary devices, and MCC bucket doors as shown on the drawings and specified herein.

3.03 FIELD TESTS

A. Visual and mechanical inspection after installation
   1. Inspect for physical damage, proper anchorage, and grounding.
   2. Verify that the ratings of the thermal overload heaters match the motor full-load current nameplate data.
   3. Check tightness of bolted connections.

B. Electrical Tests
   1. Insulation tests
      a. Measure insulation resistance of each starter section phase to phase and phase to ground with the starter contacts closed and the protective device open. Test voltage and minimum acceptable resistance shall be in accordance with the manufacturer's recommendations.
      b. Measure insulation resistance of each control circuit with respect to ground.
      c. Record all readings and include in the Operating and Maintenance manual.
   2. Undertake phase sequence test to verify phasing.
   3. Verify proper operation of control logic in all modes of control.

3.04 STARTUP / FINAL
   1. Contractor shall provide a Factory Representative for Startup of all of the assemblies within the MCC. Representative will work with all related trades to provide a coordinated control and power distribution system
   2. After system has had any repairs/modification completed, Contractor shall clean all debris in the MCC and repair / touch up any cosmetic damage.

END OF SECTION 26 24 19

SECTION 26 28 16

ENCLOSED SWITCHES AND CIRCUIT BREAKERS

PART 1 - GENERAL

1.01 RELATED WORK SPECIFIED ELSEWHERE

A. Section 26 05 00: Common Work Results for Electrical

B. Section 26 05 01: Basic Materials and Methods

1.02 DESCRIPTION

A. This Section describes general requirements, products, and methods of execution relating to overcurrent protective devices approved for use on this project. Type, duty rating and characteristics, fault interrupting capability and coordination requirements shall be determined from the plans and the following Specifications.

1.03 QUALITY ASSURANCE

A. Devices shall be the latest approved design as manufactured by a nationally recognized manufacturer and in conformity with applicable standards and UL listed.

PART 2 - MATERIALS AND EQUIPMENT

2.01 MOLDED CASE CIRCUIT BREAKERS

A. Molded case circuit breakers shall be suitable for individual as well as panelboard mounting. Bolt-on type, "plug-on" type is not acceptable.

B. The breakers shall meet NEMA and/or UL specifications as applicable to frame and size, standard rating and interrupting capability. Breakers installed in panelboards shall have short circuit interrupt ratings that match those of the panelboard.

C. The breakers shall be one-, two-, or three-pole as scheduled, operate manually for normal ON-OFF switching and automatically under overload and short-circuit conditions.

D. Operating handle shall open and close all poles simultaneously on a multi-pole breaker. Operating mechanism shall be trip-free so that contacts cannot be held closed against abnormal overcurrent or short circuit condition.

2.02 FUSIBLE SWITCHES

A. Fusible switches shall be designed for individual mounting or for panelboard mounting.

B. Switches designed for panel mounting shall have the same properties as specified for the individually mounted switches.

C. Switches shall conform to NEMA and UL 67 standard.

D. Switches shall be used in conjunction with fuses as specified in the following in order to constitute a complete "Overcurrent Protective Device".

2.03 FUSES

A. Fuses of the sizes and types specified on the Drawings shall be installed. Fuses shall be capable of interrupting the prospective symmetrical fault current. Furnish one complete set of spare fuses of each rating installed to the Owner. Provide fuse puller(s) for fuse sizes used.

PART 3 - EXECUTION

3.01 INSTALLATION

A. Size devices as required by the load being served, or as shown on the drawings.

END OF SECTION

SECTION 26 29 13.13

ACROSS-THE-LINE MOTOR CONTROLLERS

PART 1 - GENERAL

1.01 RELATED WORK SPECIFIED ELSEWHERE

A. Section 26 05 00: Common Work Results for Electrical

B. Section 26 05 01: Basic Materials and Methods

1.02 DESCRIPTION

A. This Section describes general requirements, products, and methods of execution relating to manual and magnetic motor starters provided in this and other Divisions. Overloads shall be furnished and installed in accordance with Division 26.

1.03 QUALITY ASSURANCE

A. Equipment shall be of the latest approved designs manufactured by a nationally recognized manufacturer and in conformity with the governing NEMA standards.

1.04 SUBMITTALS

A. Submit motor starters per Section 26 05 00.

PART 2 - MATERIALS AND EQUIPMENT

2.01 AC FRACTIONAL HORSEPOWER MANUAL STARTERS

A. The manual starter shall consist of a manually operated toggle switch equipped with melting alloy-type thermal overload relay.

B. Thermal unit shall be one-piece construction and interchangeable. Starters shall be inoperative if thermal unit is removed.

2.02 AC MANUAL STARTERS - LINE VOLTAGE TYPE

A. Manual starters shall be constructed and tested in accordance with the latest published NEMA standards.

B. The manual starters shall consist of a manually operated switch equipped with melting alloy type thermal overload relays in every phase conductor. The overload relays shall be trip-free and the starter shall be inoperative if any thermal unit is removed. Thermal units must be one-piece construction.

C. Starters shall be furnished in the existing MCC or in a NEMA 4X enclosure unless otherwise indicated on the plans or required by the conditions of the area in which they are installed.

2.03 AC MAGNETIC STARTERS - LINE VOLTAGE TYPE

A. Motor starters shall be across-the-line magnetic type rated in accordance with NEMA standards, sizes and horsepower ratings.

B. Starters shall be mounted individually in their own NEMA rated enclosures as shown on the drawings.

C. Starters shall be furnished with adjustable solid-state overload relay providing motor overcurrent protection, ground fault, jam/stall protection, phase loss and reversal.

D. Starters through NEMA size three shall be equipped with double break silver alloy contacts. All contacts shall be replaceable without removing power wiring or removing starter from panel.

E. Coils shall be of molded construction and shall be 120VAC.

F. Starters shall be suitable for the addition of at least four external electrical interlocks of any arrangement normally open or normally closed.

G. All starters shall have as a minimum, an enclosure mounted, “running” pilot light.

2.04 AC COMBINATION STARTERS WITH CIRCUIT BREAKER

A. Combination starters shall be manufactured in accordance with the latest published NEMA standards, sizes and horsepower ratings.

B. The disconnect handle used on combination starters shall always be in control of the disconnect device with the door opened or closed. The disconnect handle shall be clearly marked as to whether the disconnect device is "on" or "off".

C. Starters shall be in accordance with Section 26 29 13.13, Paragraph 2.03 - AC MAGNETIC STARTERS - LINE VOLTAGE TYPE.

2.05 ACCESSORIES

A. Provide push buttons, selector switches, pilot lights, elapsed time meters, etc., as indicated on the drawings or as required herein and elsewhere in these specifications. Device shall be standard components normally supplied from the factory with the starters.

PART 3 - EXECUTION

3.01 COORDINATION

A. Coordinate all details pertaining to the motor control equipment with the Division of these Specifications where the equipment is specified.

3.02 CONTROL WIRING

A. Control wiring and control devices shall be provided under the Specification Section in which the controlled equipment is specified.

3.03 NAMEPLATES

A. Provide nameplates for all starters. Coordinate names with mechanical equipment lists.

3.04 OVERLOAD PROTECTION

A. Install overload protection. Verify that protection corresponds to motor full load current and that motor starts and operates properly.

B. Provide Ambient Compensated or Ambient insensitive overload relays on all motor circuits that serve motors in remote locations.

3.05 CONTROL CIRCUITS

A. Install control circuits and perform continuity tests. Check control and interlock wiring for proper operation.

B. Where there are wires in the starter that are energized from an external source, a permanent warning sign shall be attached to the front and either a separate disconnect switch shall be installed in the starter or interlock contact(s) shall be provided on the starter disconnecting device to de-energize the externally supplied circuit inside the starter.

3.06 LABELS

A. When starter interlocks with other starters or controls, provide a label on the inside of the cover stating nature of interlock system.

END OF SECTION

SECTION 26 29 13.16

REDUCED-VOLTAGE MOTOR CONTROLLERS

PART 1 - GENERAL

1.01 THE REQUIREMENT

A. General: The CONTRACTOR shall provide solid-state reduced voltage motor starters, complete and operable, in accordance with the Contract Documents.

B. Single Manufacturer: Like products shall be the end product of one manufacturer in order to standardize appearance, operation, maintenance, spare parts, and manufacturer's services. However, the CONTRACTOR shall remain responsible to the OWNER for the WORK of the Contract.

C. Coordination: Equipment provided under this Section shall operate the electric motor and the driven equipment indicated under other equipment specifications. The CONTRACTOR's attention is specifically directed to the need for proper coordination of the WORK under this Section with the WORK under the equipment section.

1.02 CONTRACTOR SUBMITTALS

A. Furnish submittals in accordance with Section 01 33 00 – Contractor Submittals, except that Shop Drawing information for the drives shall be submitted as part of the information for the driven equipment.

B. Shop Drawings

1. Equipment information

a. Name of drive manufacturer

b. Type and model

c. Assembly drawing and nomenclature

d. Maximum heat dissipation capacity (kW)

2. Written description of ladder diagram operation. Custom schematics shall be furnished. Diagrams shall include all remote devices.

3. System block diagram and interconnection diagrams.

4. Replacement parts list and operation and maintenance instructions.

PART 2 - PRODUCTS

2.01 GENERAL

A. Solid-state reduced voltage soft starters (RVSS) shall be UL listed and consist of a SCR-based power section, logic board, and paralleling bypass contactor and electronic overload relay enclosed in a single molded housing.

B. Starters shall conform to the following:

1. The SCR-based power section shall consist of 6 back-to-back SCRs, 2 SCRs per phase, and shall be rated for a minimum peak inverse voltage rating of 3.1 times line voltage, 1488 PIV for 480 volts. Units using triacs or SCR/diode combinations shall not be acceptable. Resistor/capacitor snubber networks shall be used to prevent false firing of SCRs due to dv/dt characteristics of the electrical system.

2. Starters shall include the following logic and control functions:

a. Adjustable Torque Ramp Start or Current Limit Start

b. Ramp time adjustment from 0.5 to 180 seconds

c. Adjustable linear voltage deceleration

d. Adjustable Kick Start Time: 0-2 Seconds

e. Adjustable Kick Start Torque: 0-85%

f. Adjustable Initial Starting Ramp Torque: 0-85%

g. Adjustable Smooth Stop Ramp Time: 0-60 seconds

h. Phase loss protection

i. Under-voltage protection

j. Current unbalance protection

k. Phase rotation protection (prevents starting)

l. Adjustable overload trip: Class 5 through Class 30. Heat sink over-temperature protection shall be provided.

m. Dry contacts for remote indication of RUN and TRIP status

3. The paralleling bypass contactor shall energize when the motor reaches 90% of full speed. The contactor shall be an integral part of the reduced voltage starter and be connected directly across the power SCRs. The contactor shall utilize an intelligent coil controller to limit contact bounce and optimize coil voltage during varying system conditions.

4. The starter shall be housed in the existing MCC or in a NEMA 4X enclosure. Heaters and cooling fans shall be provided if required to maintain the equipment within the manufacturer's environmental guidelines.

5. The starter shall be provided with a control power transformer sized to accommodate all controls indicated on the Contract Drawings. An input power circuit breaker shall be provided. Lug termination of the incoming power conductors shall not be permitted. The starter and circuit breaker shall be rated for 65 KAIC RMS at 480 volts.

6. The starter shall have door-mounted indication of motor run in the form of a 'green' LED lamp.

7. Digital interface module mounted on the face of the S811 shall be used to program the soft starter. Display shall include six line LED readout. Monitoring parameters shall include line currents, pole currents, pole voltages, number of starts, and DC control voltage. Soft starter shall display motor status and the previous 5 fault conditions

8. The starter shall be provided with the operator controls indicated. Operator interface controls shall be heavy duty, oil-tight, 30.5 mm.

9. Starter shall be provided with a Form C normally open (NO), normally closed (NC) contact that shall change state when a fault condition exists. Contacts shall be rated 60 VA (resistive load) and 20 VA (inductive load). In addition, an LED display on the device keypad shall indicate type of fault (Overtemperature, Phase Loss, Jam, Stall, Phase Reversal and Overload)

10. Units enclosed in motor control centers shall be of the same manufacturer as that of the circuit breaker and motor control center for coordination and design issues.

11. Maximum continuous operation shall be at 115% of continuous ampere rating.

2.02 MANUFACTURERS, OR EQUAL

A. Solid-state reduced voltage starters shall be **Cutler-Hammer S811+**, or equal.

PART 3 - EXECUTION

3.01 GENERAL

A. The CONTRACTOR shall install the solid-state reduced voltage starters in accordance with the manufacturer's published instructions.

B. The CONTRACTOR shall

1. Verify that the overload devices are properly adjusted for the equipment installed.

2. After the equipment is installed, touch up scratches and verify that nameplate and other identification is accurate.

C. Inspection, Startup, Field Adjustment: An authorized service representative of the manufacturer shall supervise the following and certify the equipment and controls have been properly installed, aligned, and readied for operation.

1. Installation of the equipment

2. Inspection, checking, and adjusting the equipment

3. Startup and field testing for proper operation

END OF SECTION

SECTION 40 90 00

PROCESS CONTROL AND INSTRUMENTATION SYSTEMS

PART 1 - GENERAL

1.01 THE REQUIREMENT

A. The CONTRACTOR shall provide all Process Control and Instrumentation Systems (PCIS), complete and operable, in accordance with the Contract Documents. All programming and configuration shall be in accordance with Specification Section 40 95 15 – SCADA Software and Programming.

1. The requirements of this Section apply to all components of the PCIS, unless indicated otherwise.

B. Responsibilities

1. The CONTRACTOR, through the use of an Instrumentation Supplier, panel fabricator, and qualified electrical and mechanical installers, shall be responsible to the OWNER for the implementation of the PCIS and the integration of the PCIS with other required instrumentation and control devices.

2. Due to the complexities associated with the interfacing of numerous control system devices, it is the intent of these Specifications that the Instrumentation Supplier be responsible to the CONTRACTOR for the integration of the PCIS with devices provided under other sections, with the objective of providing a completely integrated control system free of signal incompatibilities.

3. As a minimum, the Instrumentation Supplier shall perform the following WORK:

a. Implementation of the PCIS

1) Prepare analog hardware submittals
2) Prepare the test plan, the training plan, and the spare parts submittals
3) Procure hardware
4) Oversee and certify hardware installation
5) Oversee, document, and certify loop testing
6) Prepare Technical Manuals
7) Prepare edited set of record drawings

4. Any Instrumentation Supplier responsibilities in addition to the list above are at the discretion of the CONTRACTOR and the Instrumentation Supplier. Additional requirements in this Section and throughout Division 40 which are stated to be the CONTRACTOR's responsibility may be performed by the Instrumentation Supplier if the CONTRACTOR and Instrumentation Supplier so agree.

C. Control System Panel Designer and Fabricator

1. Control System Panel Designer and Fabricator (CSPDF): The control system panel, and all other panels that have PLC hardware or communication hardware within them, shall be fabricated by the CSPDF. The CSPDF shall perform the following work:

   a. Edit contract loop drawings and control panel designs to show any and all changes to the design.

   b. Fabricate and Test the panel(s) at the factory.

   c. Ship the panel with a copy of the marked up drawings.

2. CSPDF Qualifications: The CSPDF shall have the resources, space, and personnel needed to design and fabricate the panels. The CSPDF shall meet the following minimum qualifications:

   a. The CSPDF shall have been in the business of building panels and bonding the construction of these panels for at least 5 years. The bonding shall be under the name and ownership of the company fabricating the panels for this project.

   b. The CSPDF shall build the panels to UL standard 508A, shall be certified to build panels to UL standard 508A, and shall attach a UL label on all new panels, or the panel builder shall build to an equal standard, shall be certified to an equal standard, and shall attach a label to all new panels with a label that is acceptable to the City of Bethel (COB).

   c. The CSPDF shall make all wiring changes to new and existing control panels. The changes shall be made to UL standard 508, or equal standard that is acceptable to the COB. The CSPDF shall provide a UL engineer, or equal testing lab engineer that is acceptable to the COB, to inspect the changes and certify that the panel meets the standard, or provide a list of deficiencies.

3. The CSPDF shall be experienced with building PLC based control systems. Acceptable OEM Manufacturers include:

   a. TecPRO, Anchorage, Alaska

   b. Dowland-Bach, Anchorage, Alaska

1.02 CONTRACTOR SUBMITTALS

A. Furnish submittals in accordance with Division 01 and the following:

1. The CONTRACTOR shall coordinate the instrumentation work so that the complete instrumentation and control system will be provided and will be supported by accurate Shop Drawings and record drawings.

2. Exchange of Technical Information: During the period of preparation of these submittals, the CONTRACTOR shall authorize a direct, informal liaison with the ENGINEER for exchange of technical information. As a result of this liaison, certain minor refinements and revisions in the systems as indicated may be authorized informally by the ENGINEER, but will not alter the scope of work or cause increase or decrease in the Contract Price. During this informal exchange, no oral statement by the ENGINEER shall be construed to give approval of any component or method, nor shall any statement be construed to grant exception to or variation from these Contract Documents.

3. Symbology and Nomenclature: In these Contract Documents, all systems, all meters, all instruments, and all other elements are represented schematically, and are designated by symbology as derived from Instrument Society of America Standard ANSI/ISA S5.1 – Instrumentation Symbols and Identification. The nomenclature and numbers designated herein and on the Contract Drawings shall be employed exclusively throughout Shop Drawings, and similar materials. No other symbols, designations, or nomenclature unique to the manufacturer's standard methods shall replace those prescribed above, used herein, or on the Contract Drawings.

B. Shop Drawings

1. General

a. Shop Drawings shall include the letterhead or title block of the Instrumentation Supplier. The title block shall include, as a minimum, the Instrumentation Supplier's registered business name and address, project name, drawing name, revision level, and personnel responsible for the content of the drawing. The quantity of submittal sets shall be as indicated in Division 01.

b. Organization of the Shop Drawing submittals shall be compatible with eventual submittals for later inclusion in the Technical Manual.

c. Shop Drawing information shall be bound in standard size, three-ring, loose-leaf, vinyl plastic, hard cover binders suitable for bookshelf storage. One set of drawings for each facility is to be hung inside the SCADA panel. The drawings are to be enclosed in PVC pockets suitable for hanging from a 3-ring binder, two drawings per pocket. The ring binder is to be attached to the inside of the front panel door.

d. Interfaces between instruments, motor starters, control valves, variable speed drives, flow meters, chemical feeders and other equipment related to the PCIS shall be included in the Shop Drawing submittal.

2. Analog Hardware Submittal: The CONTRACTOR shall submit an analog hardware submittal as a complete bound package at one time within 60 calendar days after the commencement date stated in the Notice to Proceed, including:

a. A complete index which lists each device by tag number, type, and manufacturer. A separate technical brochure or bulletin shall be included with each instrument data sheet (original documents only – photocopies are not acceptable and will be rejected). The data sheets shall be indexed in the submittal by systems or loops, as a separate group for each system or loop. If, within a single system or loop, a single instrument is employed more than once, one data sheet with one brochure or bulletin may cover all identical uses of that instrument in that system. Each brochure or bulletin shall include a list of tag numbers for which it applies. System groups shall be separated by labeled tags.

b. Fully executed data sheets according to ISA-S20 – Specification Forms for Process Measurement and Control Instruments, Primary Elements and Control Valves, for each component, together with a technical product brochure or bulletin. The technical product brochures shall be complete enough to verify conformance to all Contract Document requirements. The data sheets, as a minimum, shall show:

1) Component functional description used in the Contract Documents
2) Manufacturer's model number or other product designation
3) Project tag number used in the Contract Documents
4) Project system or loop of which the component is a part
5) Project location or assembly at which the component is to be installed
6) Input and output characteristics
7) Scale, range, units, and multiplier (if any)
8) Requirements for electric supply (if any)
9) Requirements for air supply (if any)
10) Materials of component parts to be in contact with or otherwise exposed to process media and corrosive ambient air
11) Special requirements or features

c. Priced list of all spare parts for all devices.

d. Instrument installation, mounting, and anchoring details shall be submitted in an electronic hard copy format. Each instrument shall have a dedicated 8-1/2-inch by 11-inch detail which only pertains to the specific instrument by tag number. Each detail shall be certified by the instrument manufacturer that the proposed installation is in accordance with the instrument manufacturer's recommendations and is fully warrantable. These certifications shall be embedded in the CAD files and also appear as a stamp on the hard copies. As a minimum, each detail shall have the following contents:

1) Show all necessary sections and elevation views required to define instrument location by referencing tank, building or equipment names and numbers, and geographical qualities such as north, south, east, west, basement, first floor.
2) Process line pipe or tank size, service and material.
3) Process tap elevation and location.

4) Upstream and downstream straight pipe lengths between instrument installation and pipe fittings and valves.
5) Routing of tubing and identification of supports.
6) Mounting brackets, stands, and anchoring devices.
7) Conduit entry size, number, location, and delineation between power and signal.
8) NEMA ratings of enclosures and all components.
9) Clearances required for instrument servicing.
10) List itemizing all manufacturer makes, model numbers, quantities, lengths required, and materials of each item required to support the implementation of the detail.

3. Test Procedure Submittals

a. The CONTRACTOR shall submit the proposed procedures to be followed during tests of the PCIS and its components.

b. Preliminary Submittal: Outlines of the specific proposed tests and examples of proposed forms and checklists.

4. The CONTRACTOR shall provide a submittal of the CSPDF's certifications, P.E. licenses, and project history before submitting any Shop Drawings or commencing any work on the control panels.

C. Technical Manual

1. General: Information in the Technical Manual shall be based upon the approved Shop Drawing submittals as modified for conditions encountered in the field during the WORK.

2. The Technical Manual shall have the following organization for each process:

a. Section C – Edited As-Built Drawings

b. Section D – Instrument Summary

c. Section E – Instrument Data Sheets

d. Section G – Instrument Installation Details

e. Section H – Test Results

3. Signed results from Loop Testing and FAT test.

4. Initially, two sets of draft Technical Manuals shall be submitted for review after return of favorably reviewed Shop Drawings and data required herein. Following the ENGINEER's review, one set will be returned to the CONTRACTOR with comments. The Manuals shall be revised and amended as required and the final Manuals shall be submitted 15 days prior to start-up of systems.

5. The CONTRACTOR shall provide Instrument Equipment Summary Forms for all instruments, PLC hardware, devices, control hardware, and miscellaneous equipment. The data shall be provided in electronic format, **Microsoft Excel**, or approved equal. Forms shall be from ISA S20 and/or other ISA standards as applicable.

D. Record Drawings

1. The CONTRACTOR shall keep current a set of complete loop and schematic diagrams which shall include all field and panel wiring, piping and tubing runs, routing, mounting details, point to point diagrams with cable, wire, tube and termination numbers. These drawings shall include all instruments and instrument elements. Two sets of drawings electronically formatted in AUTOCAD on CD-ROM and two hard copies shall be submitted after completion of all commissioning tasks. All such drawings shall be submitted for review prior to acceptance of the completed work by the OWNER.

1.03 WARRANTY

A. The warranty shall start from the date of final acceptance of the completed project, and shall extend for 1 year.

PART 2 - PRODUCTS

2.07 GENERAL

A. Code and Regulatory Compliance: PCIS WORK shall conform to or exceed the applicable requirements of the National Electrical Code and local building codes.

B. Current Technology: Meters, instruments, and other components shall be the most recent field-proven models marketed by their manufacturers at the time of submittal of the Shop Drawings, unless otherwise required to match existing equipment.

C. Hardware Commonality: Instruments which utilize a common measurement principle (for example, d/p cells, pressure transmitters, level transmitters which monitor hydrostatic head) shall be furnished by a single manufacturer. Panel-mounted instruments shall have matching style and general appearance. Instruments performing similar functions shall be of the same type, model, or class, and shall be from a single manufacturer.

D. Loop Accuracy: The accuracy of each instrumentation system or loop shall be determined as a probable maximum error; this shall be the square root of the sum of the squares of certified "accuracies" of the designated components in each system, expressed as a percentage of the actual span or value of the measured variable. Each individual instrument shall have a minimum accuracy of plus and minus 2 percent of full scale and a minimum repeatability of plus and minus 1 percent of full scale when

installed in the field, unless otherwise indicated. Instruments that do not conform to or improve upon these criteria are not acceptable.

E. Instrument and Loop Power: Power requirements and input/output connections for all components shall be verified. Power for transmitted signals shall, in general, originate in and be supplied by the control panel devices. The use of "2-wire" transmitters is preferred, and use of "4-wire" transmitters shall be minimized. Individual loop or redundant power supplies shall be provided as required by the manufacturer's instrument load characteristics to ensure sufficient power to each loop component. Power supplies shall be mounted within control panels or in the field at the point of application.

F. Loop Isolators and Converters: Signal isolators shall be provided as required to ensure adjacent component impedance match where feedback paths may be generated, or to maintain loop integrity during the removal of a loop component. Dropping precision wirewound resistors shall be installed at all field side terminations in the control panels to ensure loop integrity. Signal conditioners and converters shall be provided where required to resolve any signal level incompatibilities or provide required functions.

G. Environmental Suitability: Indoor and outdoor control panels and instrument enclosures shall be suitable for operation in the ambient conditions associated with the locations designated in the Contract Documents. Heating, cooling, and dehumidifying devices shall be provided in order to maintain all instrumentation devices 20 percent within the minimums and maximums of their rated environmental operating ranges. The CONTRACTOR shall provide power wiring for these devices. Enclosures suitable for the environment shall be furnished. All instrumentation in hazardous areas shall be suitable for use in the particular hazardous or classified location in which it is to be installed.

H. Signal Levels: Analog measurements and control signals shall be as indicated herein, and unless otherwise indicated, shall vary in direct linear proportion to the measured variable. Electrical signals outside control panels shall be 4 to 20 mA DC, except as indicated. Signals within enclosures may be 1 5 VDC. Electric signals shall be electrically or optically isolated from other signals. Pneumatic signals shall be 3 to 15 psig, with 3 psig equal to 0 percent, and 15 psig equal to 100 percent.

I. Alternative Equipment and Methods: Equipment or methods requiring redesign of any project details are not acceptable without prior written approval of the ENGINEER through the "or equal" process. Any proposal for approval of alternative equipment or methods shall include evidence of improved performance, operational advantage and maintenance enhancement over the equipment or method indicated, or shall include evidence that an indicated component is not available. To match existing equipment and future equipment being installed under other contracts, equipment substitutions for equipment specified as no equal will not be accepted.

J. Instrument Brackets and Mounting Hardware: All instrument brackets and mounting hardware shall be stainless steel.

2.08 OPERATING CONDITIONS

A. The PCIS shall be designed and constructed for satisfactory operation and long, low maintenance service under the following conditions:

1. Environment - water treatment/supply facility

2. Indoor Temperature Range - 32 through 84 degrees F

3. Relative Humidity - 20 through 90 percent, non-condensing

4. Seismic Zone 4

2.09 SPARE PARTS AND SPECIAL TOOLS

A. The CONTRACTOR shall provide the following:

1. Spare parts as listed in equipment specifications in Division 40.

B. The CONTRACTOR shall furnish a priced list of all special tools required to calibrate and maintain the instrumentation provided under the Contract Documents. After approval, the CONTRACTOR shall furnish tools on that list.

C. Special tools and spare parts shall be submitted before startup commences, suitably wrapped and identified.

PART 3 - EXECUTION

3.07 PRODUCT HANDLING

A. Shipping Precautions: After completion of shop assembly, factory test, and approval, equipment, cabinets, panels, and consoles shall be packed in protective crates and enclosed in heavy-duty polyethylene envelopes or secured sheeting to provide complete protection from damage, dust, and moisture. Dehumidifiers shall be placed inside the polyethylene coverings. The equipment shall then be skid-mounted for final transport. Lifting rings shall be provided for moving without removing protective covering. Boxed weight shall be shown on shipping tags together with instructions for unloading, transporting, storing, and handling at the Site.

B. Special Instructions: Special instructions for proper field handling, storage, and installation required by the manufacturer shall be securely attached to each piece of equipment prior to packaging and shipment.

C. Tagging: Each component shall be tagged to identify its location, instrument tag number, and function in the system. A permanent stainless steel tag firmly attached and stamped with the instrument tag number, as given in the tabulation, shall be provided on each piece of equipment in the PCIS. Identification shall be prominently displayed on the outside of the package. Each HART device shall have the PID number programmed

into smart HART protocol memory. The complete tag shall be the instrument drawing tag shown on the contract drawings.

D. Storage: Equipment shall not be stored outdoors. Equipment shall be stored in dry, permanent shelters, including in-line equipment, and shall be adequately protected against mechanical injury. If any apparatus has been damaged, such damage shall be repaired by the CONTRACTOR. If any apparatus has been subject to possible injury by water, it shall be thoroughly dried out and put through tests as directed by the ENGINEER. If such tests reveal defects, the equipment shall be replaced.

3.08 INSTALLATION

A. General

1. Instrumentation, including instrumentation furnished under other Divisions, shall be installed under Division 40 and the manufacturers' instructions.

2. Equipment Locations: The monitoring and control system configurations indicated are diagrammatic. The locations of equipment are approximate. The exact locations and routing of wiring and cables shall be governed by structural conditions and physical interferences and by the location of electrical terminations on equipment. Equipment shall be located and installed so that it will be readily accessible for operation and maintenance. Where job conditions require reasonable changes in approximated locations and arrangements, or when the OWNER exercises the right to require changes in location of equipment which do not impact material quantities or cause material rework, the CONTRACTOR shall make such changes without additional cost to the OWNER.

B. Conduit, Cables, and Field Wiring

1. Conduit shall be provided under Division 26.

2. Process equipment control wiring, 4-20 mA signal circuits, signal wiring to field instruments, PLC input and output wiring and other field wiring and cables shall be provided under Division 26.

3. PLC equipment cables, Control Area Networks shall be provided under Division 40.

4. Terminations and wire identification at PCIS equipment furnished under this or any other Division shall be provided under Division 40.

C. Instrumentation Tie-Downs: Instruments, control panels, and equipment shall be anchored by methods that comply with seismic requirements applicable to the Site.

D. Existing Instrumentation: Each existing instrument to be removed and reinstalled shall be cleaned, reconditioned, and recalibrated by an authorized service facility of the

instrument manufacturer. The CONTRACTOR shall provide certification of this work prior to reinstallation of each instrument.

E. Ancillary Devices: The Contract Documents show all necessary conduit and instruments required to make a complete instrumentation system. The CONTRACTOR shall be responsible for providing any additional or different type connections as required by the instruments and specific installation requirements. Such additions and such changes, including the proposed method of installation, shall be submitted to the ENGINEER for approval prior to commencing the WORK. Such changes shall not be a basis of claims for extra work or delay.

F. Installation Criteria and Validation: Field-mounted components and assemblies shall be installed and connected according to the requirements below:

1. Installation personnel have been instructed on installation requirements of the Contract Documents.

2. Technical assistance is available to installation personnel at least by telephone.

3. Installation personnel have at least one copy of the approved Shop Drawings and data.

4. Instrument process sensing lines shall be installed under Section 22 11 19 – Piping and Tubing Systems.

5. Flexible cables and capillary tubing shall be installed in flexible conduits. The lengths shall be sufficient to withdraw the element for periodic maintenance.

6. Power and signal wires shall be terminated with crimped type lugs.

7. Connectors shall be, as a minimum, watertight.

8. Wires shall be mounted clearly with an identification tag that is of a permanent and reusable nature.

9. Wire and cable shall be arranged in a neat manner and securely supported in cable groups and connected from terminal to terminal without splices, unless specifically approved by the ENGINEER. Wiring shall be protected from sharp edges and corners.

10. Fasteners using adhesives are not permitted.

11. Mounting stands and bracket materials and workmanship shall comply with requirements of the Contract Documents.

12. Verify the correctness of each installation, including polarity of electric power and signal connections, and make sure process connections are free of leaks. The

CONTRACTOR shall certify in writing that discrepancies have been corrected for each loop or system checked out.

13. The OWNER will not be responsible for any additional cost of rework attributable to actions of the CONTRACTOR or the Instrumentation Supplier.

3.09 CALIBRATION

A. General: Devices provided under Division 40 shall be calibrated according to the manufacturer's recommended procedures to verify operational readiness and ability to meet the indicated functional and tolerance requirements.

B. Calibration Points: Each instrument shall be calibrated at 20, 60, and 100 percent of span using test instruments to simulate inputs. The test instruments shall have accuracies traceable to National Institute of Testing Standards.

C. Bench Calibration: Instruments that have been bench-calibrated shall be examined in the field to determine whether any of the calibrations are in need of adjustment. Such adjustments, if required, shall be made only after consultation with the ENGINEER.

D. Field Calibration: Instruments that were not bench-calibrated shall be calibrated in the field to insure proper operation in accordance with the instrument loop diagrams or specification data sheets.

E. Analyzer Calibration: Each analyzer system shall be calibrated and tested as a workable system after installation. Testing procedures shall be directed by the manufacturers' technical representatives. Samples and sample gases shall be furnished by the manufacturers.

F. Calibration Sheets: Each instrument calibration sheet shall provide the following information and a space for sign-off on individual items and on the completed unit:

1. Project name

2. Loop number

3. Tag number

4. Manufacturer

5. Model number

6. Serial number

7. Calibration range

8. Calibration data: Input, output, and error at 20 percent, 60 percent and 100 percent of span

9. Switch setting, contact action, and deadband for discrete elements

10. Space for comments

11. Space for sign-off by Instrumentation Supplier and date

12. Test equipment used and associated serial numbers

G. Calibration Tags: A calibration and testing tag shall be attached to each piece of equipment or system at a location determined by the ENGINEER. The CONTRACTOR shall have the Instrumentation Supplier sign the tag when calibration is complete. The ENGINEER will sign the tag when the calibration and testing has been accepted.

3.10 LOOP TESTING

A. General: Individual instrument loop diagrams per ISA Standard S5.4 - Instrument Loop Diagrams, expanded format, shall be submitted to the ENGINEER for review prior to the loop tests. The CONTRACTOR shall notify the ENGINEER of scheduled tests a minimum of 30 days prior to the estimated completion date of installation and wiring of the PCIS. After the ENGINEER's review of the submitted loop diagrams for correctness and compliance with the Specifications, loop testing shall proceed. The loop check shall be witnessed by the ENGINEER.

B. Control Valve Tests: Control valves, cylinders, drives and connecting linkages shall be stroked from the operator interface units as well as local control devices and adjusted to verify proper control action, hand switch action, limit switch settings, torque settings, remote control actions, and remote feedback of valve status and position. Control valve actions and positioner settings shall be checked with the valves in place to ensure that no changes have occurred since the bench calibration.

C. Instrument and Instrument Component Validation: Each instrument shall be field-tested, inspected, and adjusted to its indicated performance requirement in accordance with manufacturer's specifications and instructions. Any instrument which fails to meet any Contract requirement, or, in the absence of a Contract requirement, any published manufacturer performance specification for functional and operational parameters, shall be repaired or replaced, at the discretion of the ENGINEER and at the CONTRACTOR’s expense.

D. Loop Validation: Controllers and electronic function modules shall be field-tested and exercised to demonstrate correct operation of the hardware and wiring. Control loops shall be checked under simulated operating conditions by impressing input signals at the primary control elements and observing appropriate responses at register in the PLC processor. Actual signals shall be used wherever available. Following any necessary corrections, the loops shall be retested.

E. Loop Validation Sheets: The CONTRACTOR shall prepare loop confirmation sheets for each loop covering each active instrumentation and control device including simple hand switches and lights. Loop confirmation sheets shall form the basis for operational tests and documentation. Each loop confirmation sheet shall cite the following information and shall provide spaces for sign-off on individual items and on the complete loop by the Instrumentation Supplier:

1. Project name

2. Loop number

3. Tag number, description, manufacturer and model number for each element

4. Installation bulletin number

5. Specification sheet number

6. Adjustment check

7. Space for comments

8. Space for loop sign-off by Instrumentation Supplier and date

9. Space for ENGINEER witness signature and date

F. Loop Certifications: When installation tests have been successfully completed for all individual instruments and all separate analog control networks, a certified copy of each test form signed by the ENGINEER or the ENGINEER's representative as a witness, with test data entered, shall be submitted to the ENGINEER together with a clear and unequivocal statement that the instrumentation has been successfully calibrated, inspected, and tested.

3.11 PERFORMANCE TEST

A. The entire PCIS hardware, field instruments, power supplies, and wiring shall operate for 30 days without failure.

B. The CONTRACTOR shall furnish support staff as required to satisfy the repair or replacement requirements.

C. If any component, other than field instruments, fails during the performance test, it shall be repaired or replaced and the PCIS shall be restarted for another 30-day period.

3.12 REQUIREMENTS FOR SUBSTANTIAL COMPLETION

A. For the purpose of this Section, the following conditions shall be fulfilled before the WORK is considered substantially complete:

1. Submittals have been completed and approved.

2. The PCIS has been installed, calibrated, and loop tested.

3. Spare parts and expendable supplies and test equipment have been delivered to the ENGINEER.

4. The performance test has been successfully completed.

5. Punch-list items have been corrected.

6. Record drawings in both hard copy and electronic format have been submitted.

7. Revisions to the Technical Manuals that may have resulted from the field tests have been made and reviewed.

8. Debris associated with installation of instrumentation has been removed.

9. Probes, elements, sample lines, transmitters, tubing, and enclosures have been cleaned and are in like-new condition.

10. Instrument Equipment Summary Forms have been accepted by the OWNER.

END OF SECTION 40 90 00

SECTION 40 95 00
PAC-BASED CONTROL SYSTEMS HARDWARE

PART 1 - GENERAL

1.01 THE REQUIREMENT

A. The CONTRACTOR, through the use of the Instrumentation Supplier and qualified electrical installers, shall provide and install the Programmable Automation Controller-based control system (PACS) hardware complete and operable, in accordance with the Contract Documents.

B. Instrumentation Supplier: It is the intent of these Specifications to have the Instrumentation Supplier be singularly responsible for selecting and verifying correct operation of compatible hardware to provide a functional PACS, and to provide future support of all PACS hardware.

C. Minimum Instrumentation Supplier Scope: The exact contractual relationship and scope definition shall be established exclusively between the CONTRACTOR and the Instrumentation Supplier. It is the intent of these Specifications that the Instrumentation Supplier, under the direction of the CONTRACTOR, shall assume full responsibility for the following, as a minimum:

1. Procurement of all hardware required to conform to these Specifications.

2. Design and submit PACS hardware, and spare parts submittals.

3. Perform all required PACS hardware tests, adjustments, and calibrations.

4. Furnish all required PACS tools, test equipment, spare parts, supplies, operations and maintenance manuals, and reproducible record drawings as specified herein.

1.02 SUBMITTALS

A. Shop Drawings: PACS hardware submittals shall be in accordance with the applicable requirements of Section 40 90 00 – Process Control and Instrumentation Systems. PACS submittals shall, however, be made separately from other process control and instrumentation system submittals.

B. Hardware Submittals: The PACS hardware submittal shall be a single submittal which includes at least the following:

1. A complete index appearing in the front of each bound submittal volume. System groups shall be separated by labeled tags.

2. Complete grounding requirements for the entire PACS, including any requirements for PACS communication networks and control room equipment.

3. Data sheets shall be included for each PACS component together with a technical product brochure or bulletin. These data sheets shall show the component name as used within the Contract Documents, the manufacturer's model number or other identifying product designation, the project tag number, the project system of which it is a part, the Site to which it applies, the input and output characteristics, the requirements for electric power, the ambient operating condition requirements, and details on materials of construction.

4. Complete and detailed bills of materials: A bill of material list, including quantity, description, manufacturer, and part number, shall be submitted for each component of the PACS. Bills of material shall include all items within an enclosure.

C. Owner’s Manuals: General requirements for Owner’s Manuals are as described in Section 40 90 00 – Process Control and Instrumentation Systems. The following items shall also be included in the PACS manual:

1. Operation and maintenance manuals for both the PACS, and all other PACS hardware.

D. Factory Test Procedure: The Instrumentation Supplier shall prepare and submit a factory test procedure which incorporates test sequences, test forms, samples of database lists, a PACS testing block diagram, and an estimated test duration which comply with the requirements of the factory test specified herein.

1.03 SERVICES OF MANUFACTURER'S REPRESENTATIVE

A. The CONTRACTOR/Instrumentation Supplier shall arrange for visits by, and services of, technical field representatives of the PAC manufacturer for installation certification, system testing and start-up. These services shall be part of the WORK.

1.04 STORAGE AND HANDLING

A. All equipment and materials delivered to the Site shall be stored in a location that shall not interfere with the operations of the OWNER's personnel or interfere with construction. Storage and handling shall be performed in a manner that shall afford maximum protection to the equipment and materials. It is the CONTRACTOR’s responsibility to assure proper handling and on-site storage.

1.05 SPECIAL WARRANTY REQUIREMENTS

A. Equipment and materials selected by the CONTRACTOR that do not achieve design requirements after installation shall be replaced or modified by the Instrumentation Supplier to attain compliance. The cost for doing so shall be the CONTRACTOR’s responsibility. Following replacement or modification, the CONTRACTOR shall retest

the system and perform any additional procedures needed to place the complete PACS in satisfactory operation and attain design compliance approval from the ENGINEER.

B. The CONTRACTOR warrants/guarantees the satisfactory performance of the equipment and materials under operating conditions for a period of 1 year after the date of final acceptance of the entire PACS. In the event that tests and inspections disclose latent defects or failure to meet the specified requirements, the Instrumentation Supplier, upon notification by the OWNER, shall proceed at once to correct or repair any such defects or non-conformance or to furnish, at the delivery point named in the Contract Documents, such new equipment or parts as may be necessary for conformity to the requirements, and shall receive no additional compensation therefore. In case of any required repairs or other corrective or remedial work covered under warranty, the warranties on all such corrections, repairs, new equipment, or parts shall be extended for an additional 24 months from the date of final acceptance, or 12 months from the date of completion of any such corrections, repairs, new equipment, or parts, whichever date is later. If the OWNER performs repair, the CONTRACTOR shall reimburse the OWNER for all costs incurred in the removal of the defective material and installation of the replacement.

PART 2 - PRODUCTS

2.01 GENERAL

A. The requirements of Section 40 90 00 – Process Control and Instrumentation Systems apply to this Section.

B. All materials and all PACS equipment furnished under this Contract shall be new, free from defects, of first quality, and produced by manufacturers regularly engaged in the manufacture of these products.

C. Hardware Commonality: Where there is more than one item of similar equipment being furnished all such similar equipment shall be the product of a singular manufacturer.

2.02 PACS ENCLOSURES

A. Each PAC and its corresponding I/O modules, power supply module(s), communication interface device(s) and peripheral equipment shall be mounted inside suitable enclosures. All I/O wiring from the field to the I/O modules shall be terminated on terminal blocks in the enclosure.

2.03 UNINTERRUPTIBLE DC POWER SUPPLY

A. Provide and install battery supported DC power supplies for backup of the PACS. DC Power Supply shall match the PACS voltage shown on the drawings.

B. The DC power supply shall provide backup power to the PACS for a minimum of 10 hours. The Contractor shall submit power consumption calculations of the PACS and the DC Power Supply shall reference these calculations.

2.04 PROGRAMMABLE AUTOMATION CONTROLLER (PAC)

A. General: Each PAC shall be of solid-state design. All central processor (CPU) operating logic shall be contained on plug-in modules for quick replacement. Chassis-wired logic is not acceptable. The controller shall be capable of operating in a hostile industrial environment and designed to provide high reliability specifically in this process application. The internal wiring of the controller is to be fixed, with the logic functions it must perform in a given application to be programmed into its memory. The controller shall be supplied with the CPU, input/output scanner, inputs, outputs, memory, power supply, and all power and interface cables necessary to function as a complete and operable PACS.

B. Design: Each PAC shall have all of the facilities required to implement the control schemes and database indicated. PACS shall have the following functions and features:

1. Modular, field-expandable design allowing the system to be tailored to this process control application. The capability shall exist to allow for expansion of the system by the addition of hardware and/or user software.

2. The processor plus input and output circuitry shall be of a modular design with interchangeability provided for all similar modules. Modules are defined herein as devices that plug together to form an interlocking modular chassis. The design must prohibit upside-down insertion of the modules.

3. The PAC shall have downward compatibility whereby all new module designs can be interchanged with all similar modules in an effort to reduce obsolescence.

4. All hardware shall operate at an ambient temperature of 0 to 60 degrees C (32 to 140 degrees F), with an ambient temperature rating for storage of - 40 to + 85 degrees C (- 40 to + 185 degrees F), and shall function continuously in the relative humidity range of 5 percent to 95 percent with no condensation. The PAC system shall be designed and tested to operate in the high electrical noise environment of an industrial plant.

5. The PAC shall provide a means for mounting the chassis in a standard cabinet.

C. Central Processors: The CPU shall contain all the relays, timers, counters, number storage registers, shift registers, sequencer, arithmetic capability, and comparators necessary to perform the indicated control functions. It shall be capable of interfacing sufficient discrete inputs, and discrete outputs as shown on the drawings. The Processor shall be an **Allen Bradley 1769 CompactLogix 5370 Controller,** as shown on the drawings or an approved equal.. The CPU shall be supplied with a 1GB **SecureDigital card Allen-Bradley 1784-SD1**, or equal. The PACS shall have the following features and capabilities:

1. All PACS shall be provided to support and implement closed loop floating and PID control which is directly integrated into the PAC's control program.

2. The CPU shall be a self-contained unit, and shall provide control program execution and support remote or local programming. This device shall also supply I/O scanning and inter-processor and peripheral communication functions.

3. The operating system shall be contained in removable programmable devices which allow for easy field replacement.

4. The CPU within the system shall perform internal diagnostic checking and give visual indication to the user by illuminating a "green" indicator when no fault is detected and a "red" indicator when a fault is detected.

5. Non-volatile memory shall store the operating system information to protect against loss in the case of power loss or system shut-down. Only at the time of a hardware change shall this configuration status be altered or re-entered.

6. The PAC shall have the ability to fit into Rockwell’s Factory Talk Directory’s Security Application and participate in the Rockwell Asset Center Disaster Recovery Program.

D. Program Creation and Storage (Memory)

1. The program storage medium shall be of a static RAM type.

2. The PACS shall be capable of addressing up to 2MB, where each word is comprised of 8 data bits.

3. Memory capacity shall be configurable to allow for the most economical match to the intended application. It shall be possible to upgrade to a processor with a larger memory size simply by saving a program, replacing the processor, and downloading the program to the new system without having to make any program changes.

4. Memory shall be capable of retaining all stored program data through a continuous power outage for 4 months under worst case conditions. A low battery condition must be detectable in ladder logic, but shall not automatically generate a major fault.

5. All user memory in the processor not used for program storage shall be allocatable from main memory for the purpose of data storage. The PACS shall be capable of storing the following data types:

   a. External Output Status
   b. External Input Status
   c. Timer Values
   d. Counter Values
   e. Signed Integer Numbers (16-bit)

f. Floating Point Numbers
g. Decimal Numbers
h. Binary Numbers
i. BCD Numbers
j. Direct and Indexed Addressing
k. Internal Processor Status Information
l. ASCII Character Data
m. ASCII String Data
n. Block Transfer Control Structures
o. Floating Point PID Control Structures
p. File Instruction Control Structures
q. Message Control Structures

6. Control logic programs shall have immediate access to the sub-elements of control structures by address and sub-element mnemonic, such as timer accumulator value, timer done bit, or PID Process Variable value.

7. Each unit shall be supplied with memory to implement the indicated control functions. The memory shall be programmed in a multi-mode configuration with multiple series or parallel contacts, counters, timers, and arithmetic functions.

E. Programming Techniques: The Contractor, through the use of an Instrumentation Supplier, shall program the PACS.

F. Ethernet Interface and Network

1. The PAC system shall offer industry standard Ethernet TCP/IP communication capabilities. The controller shall be able to connect to industry standard 100baseT media types by implementing a standard RJ-45 transceiver port that can connect to different transceivers. There shall be a CIP protocol layer that uses TCP/IP as the transport mechanism to deliver packets of data to other PACS that use the same protocol. This protocol handles the addressing and transfer of all the specific data file types in the PAC to allow for peer-to-peer messaging.

a. Token passing system.
b. Peer-to-peer communication.
c. Message error checking.
d. Retries of unacknowledged messages.
e. Diagnostic checks on other stations.
f. Interface to more than one network.
g. A user-oriented command language for manipulation of data structures of variable size and organization, such as setting or resetting bits, word and file transfers in a peer processor.
h. The ability to perform PAC memory uploads and downloads.
i. The ability to communicate with all other models of PAC manufactured by said manufacturer.

j. The ability to monitor the status of any processor remotely via the network.

k. The ability to automatically broadcast data to (and receive data from) all compatible stations on the link. Once configured, this operation shall be continuous without operator intervention.

l. A gateway interface to the Ethernet TCP/IP network for connectivity to host computers as well as other PACS that have direct Ethernet connectivity

2. The PACS shall allow industry standard repeaters, bridges, routers, and gateways on the network in order to access other PACS and host computers. The controller shall be able to name a specific gateway/router IP address in order to direct data to other networks.

3. On-line programming and upload/downloads of control programs shall be able to occur over an Ethernet network.

G. PAC Power Supply

1. The PAC shall operate in compliance with an electrical service of 24 VDC. The power supply shall be mounted in the PAC housing and be sized to power all modules mounted in that housing and an "average module load" for any empty housing slots plus 25 percent above that total. Power supply shall be by the same manufacturer as the PAC and shall be of the same product line. A single main power supply shall have the capability of supplying power to the CPU and local input/output modules. Auxiliary power supplies shall provide power to remotely located racks.

2. The power supply shall be **Allen-Bradley 1769-PB4**, no exceptions to the model shown on the Drawings.

H. PAC Input/Output (I/O) Modules

1. The PAC shall accept bulletin 1734 Point I/O modules.

I. PAC Rack Configuration: The PAC and power supply shall be mounted in the Rack configurations show on the drawings. Space is to be provided for future expansion of the racks in keeping with Allen-Bradley guidelines.

2.05 SPARE PARTS

A. Provide one card and power supply of each type as required to be installed in the SCADA panel.

PART 3 - EXECUTION

3.01 INSTALLATION

A. The CONTRACTOR shall utilize qualified personnel to accomplish, or supervise the physical installation of all elements, components, accessories, or assemblies that it provides. The CONTRACTOR shall employ installers who are skilled and experienced in the installation and connection of all elements, components, accessories, and assemblies it provides.

B. All components of the PACS, including all communication cabling, shall be the installation responsibility of the CONTRACTOR unless specifically noted otherwise. The installation of the communication network shall be the complete installation responsibility of the CONTRACTOR, including all cables, connectors, transceivers, antennas, and any required electrical grounds. Grounding shall be shown on submittal drawings. After installation of the PACS is completed, the installation shall be inspected jointly by the CONTRACTOR and the Equipment Manufacturer's representatives. Any problems shall be corrected, and when both are satisfied with the installation, a written certification of the installation shall be delivered to the ENGINEER. The certification shall state that all PAC communication and I/O modules, modems, system grounds, communication network, and all other components of the PACS have been inspected and are installed in accordance with the Manufacturer's guidelines.

3.02 FACTORY TEST

A. General: Prior to shipment of the PACS from the factory, but after the procurement, assembly, and configuration of all components, the CONTRACTOR shall conduct a factory test on the panel fabricator shop floor. This test shall be witnessed by a representative of the OWNER and the ENGINEER of record, at the place of fabrication. No PACS shall be shipped without the ENGINEER’s written approval of the factory test. The factory test is intended to be a complete PACS. The factory test shall demonstrate the functionality and performance of specified features of the PAC. The test shall include verification of all radios, PACS, and remote I/O system I/O points. Each point shall be checked from the terminal strip to register in the PAC processor. A complete system checklist shall be available during the test for recording results of selected points. **A minimum of ten (10) working days** notification shall be provided to the ENGINEER prior to testing.

B. Test Setup: The complete PACS as shown on the drawings shall be assembled and interconnected on the CONTRACTOR's factory floor. The PACS and communication devices shall be loaded with their applicable software packages. PAC input and output modules shall be installed in their assigned housings and wired to field termination points in the enclosures. The CONTRACTOR shall have a complete, up-to-date set of wiring drawings and a PAC register list for the test point, for review throughout the test.

C. The CONTRACTOR shall schedule the factory test after receiving approval of the factory test procedures submittal. One test shall be conducted for the complete system. A minimum of five 8-hour days will be budgeted for the test. The CONTRACTOR shall provide a qualified technician to assist with testing for the entire duration of the factory test.

D. Test Procedure: The factory test shall be conducted in accordance with the previously submitted and approved test procedures. The test procedures shall include written descriptions of how individual tests shall be performed and shall incorporate testing the following features as a minimum. All testing shall be completed in one continuous factory test which shall extend over 5 continuous days.

1. Power Failure: External power to enclosures and/or workstations shall be turned off and back on in order to test the operation of the DC battery back-up system.

2. The panel fabricator shall provide one technician for the 5 days of the test to assist the ENGINEER in testing the panel.

E. Test Report: The CONTRACTOR shall record the results of all factory testing on preapproved test forms which the OWNER's and ENGINEER's representatives shall sign. A copy of the completed test forms and a report certifying the results shall be provided to the ENGINEER within 10 days of completing the test.

F. Rework and Retest: If the PACS does not operate as required, the CONTRACTOR shall make whatever corrections are necessary, and the failed part of the tests shall be repeated. If, in the opinion of ENGINEER's representative, the changes made by the CONTRACTOR for such a correction are sufficient in kind or scope to effect parts of system operation already tested, then the effected parts shall be retested also. If a reliable determination of the effect of changes made by the CONTRACTOR cannot be made, then the ENGINEER's representative may require that all operations be retested. The CONTRACTOR shall bear all of its own costs for the factory test, including any required retesting.

G. All of the travel and per diem costs for factory testing and retesting shall be borne by the CONTRACTOR.

1. For factories within a 50-mile radius of the project site, no travel or per diem costs will be charged by the OWNER’s representative and ENGINEER of record.

2. For factories outside of a 50-mile radius of the project site, the CONTRACTOR shall pay air travel costs, vehicle rental costs, lodging, and meals, for two people for the duration of each visit required to witness the factory tests. The vehicle rental, lodging, and meal allowance shall be $225 per person per day.

3.03 CALIBRATION, TESTING, AND INSTALLATION

A. Calibration: All analog inputs and outputs of the PAC shall have their calibration checked at a minimum of two points to verify consistency with the balance of the analog

loop. This calibration check shall be done in conjunction with the analog loop tests in Section 40 90 00 – Process Control and Instrumentation Systems. Operator Interfaces and PAC registers shall both be verified for correctness.

B. The CONTRACTOR shall submit to the ENGINEER a system testing completion report when each process system and all aspects of the configuration software have been successfully tested as described herein. The report shall note any problems encountered and what action was required to correct them. It shall include a clear and unequivocal statement that the process systems have been thoroughly tested and are complete and functional in accordance with all Specification requirements.

END OF SECTION 40 95 00

SECTION 40 95 13

CONTROL PANELS

PART 1 - GENERAL

1.01 THE REQUIREMENT

A. General: The CONTRACTOR shall provide control panels, complete and operable, in accordance with the Contract Documents.

B. The requirements of Section 40 90 00 – Process Control and Instrumentation Systems and 40 95 00 – PAC-Based Control Systems Hardware apply to this Section.

C. The provisions of this Section apply to local panels provided in equipment systems specified in other sections, unless indicated otherwise in those sections.

D. Control and SCADA panels shall be built to UL 508, or an independent testing laboratory acceptable to the local code enforcement agency having jurisdiction. The panels shall have UL labels attached to them by the panel builder. The panel builder shall provide with each panel a certification from the independent testing lab inspector that the panel is built to their standards.

E. Panels equipped with Intrinsically Safe controls shall also bear UL 913 label in addition to the UL 508.

F. SCADA enclosures and power panel enclosures shall be built to NEC standards for enclosures.

1.02 REFERENCE DOCUMENTS

A. UL 508A – 2001 Standard for Industrial Control Panels

B. UL 913 -2000 Standard for Safety of Intrinsically Safe Apparatus and Associated Apparatus for use in Class I, II and III, Division 1 Hazardous Locations.

C. NFPA 79 – Electrical Standard for Industrial Machinery

D. NFPA 70 – Article 409

1.03 SUBMITTALS

A. General: Submittals shall be furnished in accordance with MASS Section 10.05 Article 5.6.

B. Control Panel Engineering Submittal: The CONTRACTOR shall submit a control panel engineering submittal (CPES) for each control panel and enclosure provided under Division 40. The CPES shall completely define and document the construction, finish, fuses, circuit breakers, internally-mounted hardware, communications hardware, and PLC system components. All panel drawings shall, as a minimum, be "B" size with all data sheets and manufacturer specification sheets being "A" size. The submittal shall be in conformance with ISA-S20 – Standard Forms for Process Measurement and Control Instruments, Primary Elements and Control Valves, shall be submitted as a singular complete bound volume or multi volume package within 60 calendar days after Notice to Proceed, and shall have the following contents:

1. A complete index shall appear in the front of each bound volume. All drawings and data sheets associated with a panel shall be grouped together with the panels being indexed by systems or process areas. All panel tagging and nameplate nomenclature shall be consistent with the requirements of the Contract Documents.

2. Scale construction drawings which define and quantify the type and gauge of steel to be used for panel fabrication, the ASTM grade to be used for structural shapes and straps, panel door locks and hinge mechanisms, type of bolts and bolt locations for section joining and anchoring, details and proposed locations for "UNISTRUT" members, stiffener materials and locations, electrical terminal box and outlet locations, electrical access locations, print pocket locations, writing board locations, and lifting lug material and locations.

3. Cutout locations with nameplate identifications shall be shown.

4. The Contract Drawing wiring diagrams shall be edited to identify electrical devices, terminals, and interconnecting wiring. These diagrams shall show interconnecting wiring by lines, designate terminal assignments, and show the physical location of all electrical and control devices.

5. Completed ISA S20 data sheets for all instrumentation devices associated with each control panel supplemented with manufacturer specification sheets which verify conformance to the requirements of the Contract Documents.

6. A bill of material which enumerates all devices associated with the control panel.

PART 2 - PRODUCTS

2.01 GENERAL

A. Environmental Suitability: All indoor and outdoor control panels and instrument enclosures shall be suitable for operation in the ambient conditions associated with the locations designated in the Contract Documents. Heating, cooling, and dehumidifying devices shall be provided as shown on the Drawings in order to maintain all instrumentation devices 20 percent within the minimums and maximums of their rated

environmental operating ranges. The CONTRACTOR shall provide all power wiring for these devices. Enclosures suitable for the environment shall be provided. All instrumentation in hazardous areas shall be suitable for use in the particular hazardous or classified location in which it is to be installed.

B. Panel construction shall conform to NFPA 70 (NEC) Article 409 and NFPA 79.

C. The control panel controls shall be 24 VDC. Control conductors shall be provided in accordance with the indicated requirements.

D. The control panel shall be the source of power for any 120 VAC solenoid valves interconnected with the control panel. All equipment associated with the control panel shall be ready for service after connection of conductors to equipment, controls, and control panel.

E. Unless indicated otherwise, control panels shall be housed in NEMA-rated enclosures as shown on the Drawings. Control panels shall be either wall-mounted, pedestal-mounted or equipment skid-mounted, as indicated. Internal control components shall be mounted on an internal back-panel or side-panel as required.

1. All interior control or relay panels mounted above ground level shall be NEMA 12.

2. All control or relay panels mounted below ground level, unless noted otherwise on the Drawings, shall be NEMA 4X.

3. All exterior control panels and enclosures mounted above ground level, unless noted otherwise on the Drawings, shall be NEMA 4 with rain shield across top of doors.

F. Each source of ‘external’ voltage shall be isolated by providing disconnecting fused terminal blocks or DIN rail mounted relays. Each control panel shall be provided with identified terminal strips for the connection of all external conductors. The CONTRACTOR shall provide sufficient terminal blocks for future expansion, whether or not shown on the Drawings.

G. Motor starters, where required, shall be in accordance with Section 26 24 19 – Low Voltage Motor Control Centers. Each motor starter shall be provided with PLC interface circuits as indicated on the drawings. Electrical components shall be of standard American manufacture.

H. Discrete outputs from the control panels shall be provided by electrically isolated contacts rated for 2 amps at 24 VDC or 5 amps at 120 VAC.

I. All control panel mounted devices shall be provided as shown on the Drawings.

J. Painting: Steel control panels shall be thoroughly cleaned and sand blasted per Steel Structures Painting Council Specification SSPC SP 6 (Commercial Blast) after which surfaces shall receive a prime coat of **Amercoat 185**, or equal, 3 mils DFT, for a total thickness of the prime plus finish system of 6 mils. The finished color of the outside surfaces shall be ANSI 61 gray paint. Interior of the control panel, back-panel, and side-panels shall have a white finish coat.

2.02 CONTROL PANELS

A. NEMA 4X

1. Enclosure shall be 16-gauge or 14-gauge thickness, unless otherwise indicated on the Drawings, Type 304 or 316L stainless steel.

2. Enclosures shall have stainless steel hinges, hinge pins, and door clamps.

3. Finish shall be unpainted, smooth #4 brushed finish, as specified for steel control panels.

4. Enclosures and Panels shall be as manufactured by **Hoffman**, or equal.

B. NEMA 12

1. Steel panel section faces shall be No. 14 gauge minimum thickness, unless otherwise indicated on the Drawings. All materials shall be selected for levelness and smoothness.

2. Structural shapes and strap steel shall comply with ASTM A 283 – Low and Intermediate Tensile Strength Carbon Steel Plates, Grade C.

   a. Bolting Material: Commercial quality carbon steel bolts, nuts, and washers shall be 1/2-inch diameter with UNC threads. Carriage bolts shall be used for attaching end plates. All other bolts shall be hex end machine bolts. Nuts shall be hot pressed hex, American Standard, heavy. Standard wrought washers shall be used for foundation bolts and attachments to building structures. All other bolted joints shall have SAE standard lock washers.

3. Enclosures and Panels shall be as manufactured by **Hoffman**, or equal.

C. Fabrication

1. End plates, top plates, and top closure panels (to hung ceiling) shall be provided when required by the material requisition. End plates, top plates, and top closure panels shall be removable with countersunk bolts to match panels. Top closure panels shall be furnished in lengths that match the widths of standard panels, except that one top closure panel may extend across two 4 feet 6 inches wide or five 2 feet wide standard panels. The vertical joints of these panels shall align with the vertical joints of the standard panels.

2. Doors shall be flush-fitting, gasketed, and be of the hinged type with door handles. Screwdriver 1/4 turn or Dzus type fasteners are not acceptable.

   a. The flanged edges of all panels shall be straight and smooth. Corners shall be welded and ground smooth.
   b. The face of the panel shall be true and level after flanging.
   c. All panel cut outs and holes may be cut or drilled by any standard method that does not cause deformation. Burrs shall be ground smooth.
   d. Adjacent panels shall assemble with faces flush. Gaps or cracks shall not be visible from the front of the assembled instrument board.
   e. Stiffeners shall be welded to the back of panels, as required to prevent panel deformation due to the weight of face-mounted instruments.
   f. Panels shall be self-supporting as defined below.

D. Framework and Supports

1. The rear of each panel section shall have a steel framework assembled to it for supporting conduit, wireways, switches, piping, and all instrument accessory items such as relay or terminal enclosures, transducers, pressure switches, valves, and air relays. The main framework shall be constructed of standard structural shapes. Special shapes such as "Unistrut" may be used for secondary supports. Framework must neither interfere with instrument connections nor interfere with access needed for maintenance or adjustments.

2. Steel framework shall extend 2 feet 4 inches back from the panel face, or as indicated in the material requisition. Where indicated, individual adjustable leg supports shall be provided at the back of the framework so that the entire panel is self-supporting.

E. Preparation of Panel Surface

1. The following requirements apply to the front and rear face of the panel, both sides and the edges of all flanges, and the periphery of all holes or cut outs.

   a. All high spots, burrs, and rough spots shall be ground smooth.
   b. The surfaces shall be sanded or sandblasted to a smooth, clean, bright finish.
   c. All traces of oil shall be removed with a solvent.
   d. The first coat of primer shall be applied immediately after oil removal.

F. Instrument Finishing: The final coats applied to painted surface of instrument cases, doors, or bezels that are visible from the front of panels shall be manufacturer's standard, unless otherwise indicated. Black japan or "crinkle" finishes on instrument cases are not acceptable.

G. Mounting of Instruments

1. The panel vendor shall provide cut outs, and shall mount all instrument items indicated to be panel-mounted, including any instruments indicated to be furnished by other vendors but installed in the panel.

2. The panel vendor shall also mount behind the panels other instrument accessory items as required for functionality or as indicated.

3. Equipment mounted at the rear of panel shall be installed to allow for commissioning adjustments, servicing requirements, and cover removal.

4. Spare space shall be kept clear of wiring, etc., to give maximum space for future additions.

H. Electrical Requirements

1. The CONTRACTOR shall provide conduit, wireways, switches, wire, and electrical fittings for all 24 VDC and 120 VAC circuits to instruments and other electrical devices as required for a complete and operable installation.

2. Conduit, wireways, junction boxes and fittings shall include those required between sensors and transmitters and between the junction boxes and instruments.

3. Each terminal connection shall have a plastic plate with a terminal and instrument tag number. Wiring shall be identified with stamped tubular wire end markers. Terminals shall be DIN rail mounted, rated at 400 VAC, manufactured by **Entrelec**, or equal.

4. Each panel shall be provided with a switched 60 watt incandescent T-10 style light fixture, as shown on the Drawings. The fixture shall include a 120-volt receptacle and door switch. The fixture shall be **Hoffman model A-LTDB1**, or equal.

5. Wiring Methods: Wiring methods and materials for all panels shall be in accordance with the NEC requirements for General Purpose (no open wiring) unless otherwise indicated.

6. Signal and Control Circuit Wiring

   a. Wire type and sizes: Conductor shall be flexible stranded copper wire, UL. Wires for instrument signal circuits and alarm input circuits shall be No. 16 AWG Type MTW rated for 300 volts. The analog cables between the PLC I/O card and terminal strips shall be (8) conductor No. 18 AWG cable rated 300 volts for loop powered devices and 8-pair shielded No. 18 AWG cable rated 300 volts for 4-wire loops. DeviceNet cable shall be as per Allen-Bradley requirements, and terminated per Allen-Bradley requirements.

   b. Wire Insulation Colors:

      1) 120 VAC Power - Black 14 AWG minimum

2) 120 VAC Neutral - White 14 AWG minimum
3) 120 VAC Ground - Green 14 AWG minimum
4) 120 VAC Control - Red 14 AWG minimum
5) 120 VAC Foreign Power - Yellow 16 AWG minimum
6) 120 VAC Foreign Neutral - Yellow 16 AWG minimum
7) DC Positive - Blue 16 AWG minimum
8) DC Negative - White/Blue 16 AWG minimum

All 120 VAC power wiring protected by the main circuit breaker and incoming power service shall be No. 12 AWG.

c. Wire Marking: Wire numbers shall be marked using white numbered wire markers made from heat shrink plastic. Wires shall be marked as shown on the Drawings. Numbers shall read from left to right.

d. Flexible conduit is only to be used where specified.

e. Conduit fittings shall be **Crouse Hinds cast fittings**, or equal.

f. For equipment grounding, panels shall be provided with a 1/4 inch by 1 inch copper ground bus complete with solder-less connector for one No. 4 AWG bare stranded copper cable. The copper cable shall be provided by the CONTRACTOR and be connected to the electrical equipment ground of the 120-volt panel supplying power.

7. Power Supply Wiring

a. Unless otherwise indicated, all instruments, alarm systems, and motor controls shall operate on 24 VDC circuits.

b. The panel fabricator shall provide terminal box connections for the main power supply entry as shown on the Drawings.

c. When instruments do not come equipped with integral fuses, provide fuses as required for the protection of individual instruments against fault currents. Fuses shall be mounted on the back of the panel in a fuse holder, and each fuse shall be identified by a service name tag. Fuses shall be as manufactured by **Bussmann Manufacturing Division, Type KAW TRON**, or equal. Circuit breakers shall be provided as shown on the Drawings.

I. Relays:

1. DIN rail mounted relays shall have contacts rated at 8 amps, 230 volts, at 20,000 operations. The coils shall be 24 VDC at 0.03 amps. Relays shall be **Entrelec model RB121A**, or equal, for single pole, and **RB122** for 5-amp double pole.

2. Battery system test relays shall have contacts rated at 15 amps, 120 VAC, at 150,000 operations. The coils shall be 24 VDC at 0.8 watts. Relays shall be **Siemens 3TX7110-5JC03** with **3TX7144-1E7** socket.

3. Intrinsic Safety Relay: The intrinsic safety relay shall provide isolation of 2-wire 24 VDC circuits in a hazardous location. The safety relays for 4-20 ma

analog circuits shall be capable of driving up to a 500-ohm load and pass HART protocol signals to the field devices. The relays shall be **Turk model MK33**, or equal.

J. Terminals: Fused Terminals for analog input and output points shall be a 3-wire terminal with a fused circuit, a feed through circuit and a ground terminal. Fused Terminals for the discrete input points shall be 2-wire terminal with a fused circuit and a feed through circuit. Provide a one-tenth of an ampere rapid blow 250-volt fuse for all analog circuits and all discrete input circuits. The analog terminals shall be **Weidmuller model KDKS 1 part 953245**, and the discrete input terminal shall be **Weidmuller model KDKS 1 PE part 953245**.

K. Spare Fuses: For each panel, provide the following spare fuses:

1. A minimum of two spare fuses of each size

2. One spare fuse for every ten fused circuits

Provide the fuses in a spare fuse box mounted on the interior wall of the panel. Fuse box shall be **Plano Tackle Systems 1061 Accessory Box, Plano, IL**, **www.planomolding.com**, or equal.

L. Power Supply 24 VDC: Each panel shall be supplied from a battery-backed 24 VDC power supply. Each power supply module shall include a DC-OK relay contact that shall be wired to a discrete input. The power supply shall meet the requirements of Section 40 95 00.

M. The DC power supply shall be a **SENS model Q 024-025-T-L-511-C**, or equal. The batteries shall be 24 V sealed lead acid rated at 103Ah at the 10 hour rate. Batteries are to be (2) units of the **Powersonic Battery model PS-121100**, or equal.

N. DC-DC Converters: Where 0-5 VDC is required a DC to DC converter shall be provided. The converter is to be provided with an overload protection function that protects the load and the power supply from possible damage by over current. When the output current rises above 105% of the rated output current, the protection function is to be triggered decreasing the output voltage. When the output current falls within the rated range, the overload protection function is to be automatically cleared. The DC-DC converter shall be **Omron model S82S-7305**, or equal.

O. 120 VAC Surge Arrestor: A 120 VAC three-stage surge protector shall be provided on the main leads of each panel. The surge protector shall include a first stage inline inductor, a second stage MOV to ground with a thermal fuse, and a third stage array of MOVs to provide a small amount of capacitance. The unit shall be DIN rail-mounted. The MOV shall include green LED to indicate the status of the second stage MOV. Provide two (2) spare units for each panel. The unit shall be rated for 120 VAC and shall be either **Allen Bradley Bulletin 4983 model 1769-D120-20**, **Advance Surge**

Supressor model TSP-WG6-120VAC-10A-01, Control Concepts 'Islatrol IE Series' model IE-110, or equal.

P. Intrinsic Safety Relay: The intrinsic safety relay shall provide isolation of 2-wire 24 VDC circuits in a hazardous location. The safety relays for 4-20 ma analog circuits shall be capable of driving up to a 500-ohm load and pass HART protocol signals to the field devices. The relays shall be Turk model MK33, or equal.

Q. Miscellaneous Parts:

1. Each panel shall be provided with a large steel folding shelf, 12 inches deep by 18 inches wide, **Hoffman model A-ASHLF1218**, or equal, installed on the panel door as shown on the Drawings..

2. Each panel shall be provided with a data pocket holder 1 inch deep by 12 inches wide by 12 inches high, **Hoffman model A-DP2**, or equal, installed on the panel door as shown on the Drawings.

3. Incandescent lighting package with integral door switch and convenience receptacle. Provide mounting spacers as required.

R. Labor and Workmanship: Panels shall be fabricated, piped, and wired by fully qualified workmen who are properly trained, experienced, and supervised.

2.03 MARKING

A. Control panels shall be marked with the following information that is plainly visible after installation:

1. Manufacturer's name

2. Supply voltage

3. Short-circuit rating of the main breaker

4. Name of the project and site

5. Enclosure rating

PART 3 - EXECUTION

3.01 INSTALLATION

A. Preparation for Shipment and Shipping

1. Panels shall be crated for shipment using a heavy framework and skids. Panel sections shall be cushioned to protect the finish of the instruments and panel during shipment. Instruments that are shipped with the panel shall further have

suitable shipping stops and cushioning material installed to protect parts that could be damaged due to mechanical shock. Each separate panel unit shall be provided with removable lifting lugs to facilitate handling.

2. All control panel factory testing and inspection shall be performed prior to shipping.

3. Control panels shall be installed in accordance with Section 40 90 00 – Process Control and Instrumentation Systems.

3.02 PENETRATIONS

A. All penetrations in underground vaults or NEMA 4X areas shall be bottom entry.

3.03 CONTROL PANEL SIGNAL AND CONTROL CIRCUIT WIRING

A. Wiring Installation: All wires shall be run in plastic wireways except (1) field wiring, (2) wiring between mating blocks in adjacent sections, (3) wiring from components on a swing out panel to components on a part of the fixed structure, and (4) wiring to panel mounted components. Wiring run from components on a swing out panel to other components on a fixed panel shall be made up in tied bundles. These bundles shall be tied with nylon wire ties and shall be secured to panels at both sides of the "hinge loop" so that conductors are not strained at the terminals.

B. Wiring run to control devices on the front panels shall be tied together at short intervals with nylon wire ties and be secured to the inside face of the panel using adhesive mounts.

C. Enclosures Wiring: All wiring shall be run in liquidtight flexible conduit (LFMC), unless otherwise noted on the Drawings. All enclosure wiring and raceways shall be installed by the panel builder in the shop.

D. Wiring to rear terminals on panel mount instruments shall be in plastic wireways secured to horizontal brackets above or below the instruments in about the same plane as the rear of the instruments.

E. Shop Drawings shall show conformance to the above wiring installation requirements.

F. Wire Marking: Each signal, control, alarm, and indicating circuit conductor connected to a given electrical point shall be designated by a single unique number as shown on the Contract Drawings. These numbers shall be marked on all conductors at every terminal.

3.04 CALIBRATION, TESTING, AND INSTRUCTION

A. General: Calibration, testing, and instruction shall be performed in accordance with Section 40 90 00 – Process Control and Instrumentation Systems.

B. Inspection and Approval

1. Panel fabricator shall conduct the following tests prior to arrival of the ENGINEER or before shipment, if the ENGINEER chooses not to witness factory testing.

   a. All status, control, analog and alarm circuits rung out to determine their operability.

   b. All electrical power circuits checked for continuity and where applicable, operability.

   c. Any other test required to place the panel in an operating condition.

2. It shall be the responsibility of the CONTRACTOR to furnish all necessary testing devices and sufficient manpower to perform the tests required by the ENGINEER.

3. Field Testing: Each control panel shall be tested again for functional operation in the field after the connection of external conductors and prior to equipment startup.

END OF SECTION 40 95 13

SECTION 40 95 15
SCADA SOFTWARE AND PROGRAMMING

PART - 1 GENERAL

1.01 THE REQUIREMENT

A. The CONTRACTOR shall provide all Process Control and Instrumentation Systems (PCIS) programming and software, complete and operable, in accordance with the Contract Documents.

B. The requirements of this Section apply to all components of the PCIS, unless indicated otherwise.

C. Responsibilities:

1. The CONTRACTOR shall design, code and test the Process Sequences specified for the PCIS.

2. As a minimum, the Programmer shall perform the following work:

a. Implementation of the PCIS

1) Prepare program and documentation submittals

2) Prepare the test and training plan

3) Procure software

4) Generate, test and verify PLC code

5) Create HMI graphics screens

6) Prepare software documentation for insertion into Technical Manuals

b. Install programming in the PLC(s) and verify proper operation

3. Any programming responsibilities in addition to the list above are the responsibility of the CONTRACTOR to prepare a complete and operational system.

1.02 CONTRACTOR SUBMITTALS

A. Furnish submittals in accordance with Division 01.

1. Exchange of Technical Information: During the period of preparation of these submittals, the CONTRACTOR shall authorize a direct, informal liaison with the ENGINEER for exchange of technical information. As a result of this liaison,

certain minor refinements and revisions in the systems as indicated may be authorized informally by the ENGINEER, but will not alter the scope of work or cause increase or decrease in the Contract Price. During this informal exchange, no oral statement by the ENGINEER shall be construed to give approval of any component or method, nor shall any statement be construed to grant exception to or variation from these Contract Documents.

2. Symbology and Nomenclature: In these Contract Documents, all systems, all meters, all instruments, and all other elements are represented schematically, and are designated by symbology as derived from Instrument Society of America Standard ANSI/ISA S5.1 – Instrumentation Symbols and Identification. The nomenclature and numbers designated herein and on the Drawings shall be employed exclusively throughout Shop Drawings and similar materials. No other symbols, designations, or nomenclature unique to the manufacturer's standard methods shall replace those prescribed above, used herein, or on the Drawings.

B. Software:

1. General

a. Submit a list of all programming and accessory software used for programming the PLC and HMI or needed for communication or HMI production.

b. Provide version numbers for all submitted software.

2. Licenses and Security Keys and Proprietary Programming

a. Upon completion and acceptance of the programming, the transfer of all licensing and security keys to the OWNER shall be provided.

b. Programming will be provided with documentation, and upon acceptance will become the property of the OWNER.

3. Test Procedure Submittals

a. The CONTRACTOR shall submit the proposed procedures to be followed during test of the PCIS and its components.

b. Preliminary Submittal: Outlines of the specific proposed tests and examples of proposed forms and checklists.

4. Software and Programming Submittals

a. Documentation shall include:

1) Annotated ladder diagrams

2) “Plain language” variable and I/O names

3) Lookup, setpoint and constant tables identified

b. Format to be A size printable and submitted electronically in PDF or MS Word files that do not require programming software to review.

5. The CONTRACTOR shall provide a submittal of certification and project history before submitting any Shop Drawings or commencing any work on the control panels.

C. Technical Manual

1. General: Information in the Technical Manual shall be based upon the approved Shop Drawing submittals as modified for conditions encountered in the field during the WORK.

2. The Technical Manual shall have the following organization for each PLC/process:

a. Section A – Functional Narrative

b. Section B – Documented Programming

c. Section C – Instrument Tags used

d. Section D – Software Versions used for preparation

3. Initially, two sets of draft Technical Manuals shall be submitted for review after return of favorably reviewed Shop Drawings and data required herein. Following the ENGINEER's review, one set will be returned to the CONTRACTOR with comments. The Manuals shall be revised and amended as required and the final Manuals shall be submitted 15 days prior to start-up of systems.

1.03 WARRANTY REQUIREMENTS

A. Equipment and materials selected by the CONTRACTOR that do not achieve design requirements after installation shall be replaced or modified by the Instrumentation Supplier to attain compliance. The cost for doing so shall be the CONTRACTOR’s responsibility. Following replacement or modification, the CONTRACTOR shall retest the system and perform any additional procedures needed to place the complete PLCS in satisfactory operation and attain design compliance approval from the ENGINEER.

B. The CONTRACTOR warrants/guarantees the satisfactory performance of the equipment and materials under operating conditions for a period of 2 years after the date of final acceptance of the entire PLCS. In the event that tests and inspections disclose latent defects or failure to meet the specified requirements, the Instrumentation Supplier, upon notification by the OWNER, shall proceed at once to correct or repair any such defects or non-conformance or to furnish, at the delivery point named in the Contract Documents, such new equipment or parts as may be necessary for conformity to the requirements, and shall receive no additional compensation therefore. In case of any required repairs or other corrective or remedial work covered under warranty, the warranties on all such

corrections, repairs, new equipment, or parts shall be extended for an additional 24 months from the date of final acceptance, or 12 months from the date of completion of any such corrections, repairs, new equipment, or parts, whichever date is later. If the OWNER performs repair, the CONTRACTOR shall reimburse the OWNER for all costs incurred in the removal of the defective material and installation of the replacement.

C. Programming:

1. The intent is for the CONTRACTOR to provide all of the initial programming and software in accordance with the contract documents. After the factory testing is completed and the project is accepted, the OWNER at their discretion, may request further assistance as needed on-site. An RFQ may be issued to contract these services as-needed basis.

2. Warranty for the programming shall extend until such time as the original programming is modified by individuals other than the CONTRACTOR or representative.

PART - 2 PRODUCTS

2.04 PROGRAMMING/SOFTWARE

A. PLC Programming – RSLogix 5000V20

B. Communications – RSLinx Classic (Offered as part of RSLogix but must be specified at time of order).

2.05 HARDWARE

A. See Section 40 95 14 – PAC Based Control System Hardware

PART - 3 EXECUTION

3.06 INTENT

A. The intent is for the CONTRACTOR to provide all the initial programming and software in accordance with the contract documents. After the factory testing phase is completed and accepted, the OWNER will take over responsibility for the maintenance and modification of the programming.

The OWNER may request further assistance as needed assistance on-site for the maintenance and modification of the programming. At the OWNER’s discretion, an RFQ may be issued to contract these services on an as-needed basis.

3.07 REQUIREMENTS FOR COMPLETION

A. For the purpose of this Section, the following conditions shall be fulfilled before the WORK is considered complete:

1. Submittals have been completed and approved.

2. Factory testing has been completed and approved.

3. PCIS is installed and functioning properly per contract requirements.

END OF SECTION

SECTION 31 20 00
EARTH MOVING

PART 1 - GENERAL

1.01 SUMMARY

A. This section covers the furnishing of materials, labor, equipment, and supervision required to complete the site earthwork construction including roadway, walkway, parking lot, and building excavation, fill, backfill, site grading, and drainage as shown in the construction drawings.

1.02 TESTING

A. Where compaction requirements are specified, the maximum soil density shall be determined by one of the laboratory procedures listed below. The particle size distribution of the soil dictates which laboratory procedure should be used.

1. Soils meeting the following gradation requirement and having cohesionless, free-draining characteristics should be tested in accordance with ASTM D 4253 "Maximum Index Density and Unit Weight of Soils Using a Vibratory Table."

Sieve Size	Percent Passing by Weight
3"	100*
1-1/2"	70-100
No. 200	0-15

2. Soils which do not meet the gradation requirement presented in Item 1 above and which do meet the following gradation requirement should be tested in accordance with ASTM D 1557 "Laboratory Compaction Characteristics of Soil Using Modified Effort [56,000 ft-lb/ft3 (2,700 kN-m/m3)]."

3. The oversize fraction (retained on the No. 4, three-eighth inch or three-fourth inch sieve, as appropriate) should not be used in performing the D 1557 compaction test. The modified maximum dry unit weight of soils that contain more than five percent oversize should be corrected in accordance with ASTM D 4718, "Correction of Unit Weight and Water Content for Soils Containing Oversize Particles."

Sieve Size	Percent Passing by Weight
3"	100*
3/4"	70-100

4. Soils that do not meet the gradation requirements presented in Items 1 and 2 above should be tested in accordance with one of the methods listed above that have been modified with the concurrence of the project geotechnical engineer.

A. The in-place soil density shall be determined in accordance with:

* The field sample may contain up to 10% cobbles, which should be discarded prior to testing.

ASTM D 6938 In-place Density and Water Content of Soil and Soil Aggregate by Nuclear Methods (Shallow Depth).

B. In-place density tests shall be taken on each lift of fill or backfill at the rate of one test per 5,000 square feet of compacted work area. Failing test areas shall be recompacted and retested until the compaction requirements are met.

1.03 SUBMITTALS

A. Contractor shall submit a gradation test in accordance with ASTM D 422 on each type and source of material used in fills and backfills. If material is to be non-frost susceptible (NFS), hydrometer tests shall be performed in accordance with ASTM D 422.

1.04 DEFINITIONS

B. NFS Material: NFS material is sand, gravel, crushed stone, or mixtures thereof, which contains no more than three percent particles finer than 0.02 mm by weight.

C. Classified Material

1. NFS, unfrozen, inorganic soils meeting the following gradation requirements for the minus three-inch fraction.

Sieve Size	Percent Passing by Weight
3"	100*
1-1/2"	70-100
3/4"	30-100
1/2"	25-100
No. 4	20-49
No. 40	0-25
No. 200	0-6
0.02 mm	0-3

* The fill may contain up to 10% cobbles.

D. Unclassified Material: Inorganic soils free of trash, peat, volcanic ash, debris, or frozen clods, which are capable of being satisfactorily compacted as required by the plans and these specifications.

E. Unsuitable Material: Soil materials that do not qualify as “classified” or “unclassified” materials.

F. General Excavation: Any excavation of any type of material, including rock and frozen material, within the limits of excavation as shown on the Drawings or called for in the specifications.

G. Over-Excavation: Any excavation beyond limits of the contract that has been done without the written authorization of the Owner’s Representative.

H. Subgrade: The surface upon which classified or unclassified material is placed.

I. Area Grading: Area grading consists of the excavation and fill work along the perimeter of the site necessary for a smooth transition from the design site grades to the grade(s) of the adjacent properties. This work is also commonly called “site grading” or “overlot grading.”

* The field sample may contain up to 10% cobbles, which should be discarded prior to testing.

J. Work Area: For purposes of determining the number of required in-place density tests, work area is defined as the location where fill is being actively placed at any one time. The work area could be the entire site or a small fraction of the site depending on how the earthwork is performed.

PART 2 - PRODUCTS

2.01 MATERIAL SOURCE AND HANDLING

A. When the quantity of classified and unclassified soils required for the work exceeds that available from excavated materials, the additional material shall be from Contractor-furnished borrow areas. The Contractor shall locate, obtain, develop, and process classified and unclassified materials to complete the requirements of work.

1. No soils materials that have ever been contaminated with petroleum or hazardous substances shall be incorporated into the work without prior written approval of the Owner.

B. When the soils into which the excavation will penetrate and/or when the backfill soils are sensitive to erosion, sloughing under seepage forces, softening during soaking, and/or repeated loading of heavy equipment, the Contractor shall take all necessary steps to protect the work at no expense to the Owner. This may include, but is not limited to:

1. Sloping the excavation to drain and/or dewatering from inside the excavation with sumps and/or pumps or from outside the excavation with well-points or other means;
2. Limiting construction traffic to designated and maintained construction roads and placing additional temporary fill as necessary to support the traffic loads;
3. Developing alternate access routes; and,
4. Excavating with a backhoe with a smooth blade from outside the excavation.

C. If the subgrade or backfill soils are disturbed by surface runoff, ponding, seepage, and/or construction traffic, the disturbed soils shall be regraded and densified to the density requirements specified herein or completely removed and replaced with classified materials compacted to the density requirements specified herein. The Contractor shall perform corrective work at no expense to the Owner.

PART 3 - EXECUTION

3.01 CONSTRUCTION STAKING

A. The Contractor shall furnish the surveys for construction. Contractor is to maintain and record field adjustments and redlines on a set of plans. Record drawings are to be submitted to the Engineer at the end of the project.

3.02 EXCAVATION

A. General

1. Excavation consists of the removal and reuse or disposal of all materials encountered to obtain the required subgrade elevations and to remove organics.
2. Classified and unclassified excavated materials shall not be removed from the site unless they are surplus to the requirements of the work and then only with the written

approval of the Owner's Representative. Excess material not incorporated in the work and unsuitable material shall be transported to the Contractor's off-site disposal area. The Drawings indicate the extent of the excavation required.

3. The Contractor shall conform to the elevations and dimensions shown on the Drawings, within a tolerance of 0.10 feet for roads, parking areas, walkways, and 0.05 for building areas. Over excavation for the purpose of obtaining materials for use elsewhere in the work is not permitted without written approval.
4. The excavation shall be shaped to drain and shall be maintained in a dry condition, free of puddles or holes where water may accumulate. The Contractor shall plan his operation in a sequence that will provide drainage at all times. Any areas that cannot be so drained shall be kept free of standing water by pumping, if necessary.
5. Excavation shall be performed in a manner that will not endanger adjacent structures or improvements.
6. If hazardous materials of any kind are encountered in the excavation, Contractor shall immediately notify the Owner's Representative and stop excavation until the Owner has determined how to deal with it.
7. When permanently frozen soils are encountered, place fill or backfill materials in a timely manner, as directed, to minimize degradation of the foundation material. Do not place fill or backfill over seasonally frozen ground unless authorized in writing.
8. Thaw and drain frozen material deemed acceptable for fill before placing in the embankment. Frozen cuts may require stage excavation: remove thawed material and allow the cut to thaw while work continues on some other portions of the project. After the material in the cut has thawed to a sufficient depth, remove the thawed material and dewater. Dewatering is incidental. Repeat this operation until all frozen material is removed or the cut is excavated to grade.

B. Roadways, Parking Areas, Walkways

1. Excavation shall be carried to the subgrade elevations required for the placement of classified material as determined by drawings. If unsuitable material is found, the Contractor shall contact the Engineer.

C. Over Excavation

1. Over excavation shall be restored by the Contractor by backfilling with classified material and compacting to 95 percent of the maximum density at no cost to the Owner.

D. Stability of Sides

1. The Contractor shall slope the sides of excavations to the angle required for safety or shore and brace where sloping is not possible either because of space restrictions or stability of material excavated. Maintain sides and slopes of excavations in a safe condition until completion of backfilling by scaling, benching, shelving, or bracing. Take precautions to prevent slides or cave-ins when excavations are made in locations adjacent to backfilled excavations and when sides of excavations are subjected to vibrations from vehicular traffic or the operation of machinery or any other source. In all cases the sides of all excavations shall be constructed to satisfy the requirements set forth in the local, state, and federal safety regulations regarding shoring and slope angle.

E. Cold Weather Protection

1. Material must be kept from freezing from the time earthwork begins until final acceptance of the work, unless specified otherwise in writing by the Owner's Representative.
2. All material that is allowed to freeze shall be thawed and redensified to 95 percent of the maximum density by the Contractor at no expense to the Owner, unless specified otherwise in writing by the Owner's Representative.

3.03 FILL AND BACKFILL

A. General

1. Fill and backfill consists of the placement of classified and/or unclassified material in layers to the required elevations.
2. All excavated materials meeting the requirements for classified and unclassified materials shall be incorporated into the work unless they are surplus to the requirements of the work and the Owner's Representative has given written approval not to use the material.
3. The Contractor shall keep all fills and backfill well shaped, drained, and maintained.

B. Roads, Parking Areas, Walkways, Building Pad

1. Fills and backfills shall be constructed of classified materials.
2. The top six inches shall have a maximum particle size of 3 inches.
3. Fills and backfills shall be constructed in lifts of 12-inch maximum thickness, [six- inch maximum thickness if hand-operated compactors are used] and compacted to not less than 95 percent of maximum density. The finished surface of fills and backfills shall be smooth with no soft or yielding areas and shall be graded to not more than 0.1 feet above or below the design grade.
4. The Contractor shall backfill excavations as promptly as the work permits, but not until completion of the following:

   a. Owner's acceptance of construction below finish grade such as culverts, subdrains, and other utilities.

   b. Inspection, testing, approval, and recording locations of underground utilities.

   c. Removal of shoring and bracing and backfilling of any resulting voids with satisfactory materials. Cut off temporary sheet piling driven below the bottom of structures and remove in a manner to prevent settlement of the structure or utilities; or leave in-place if required.

   d. Removal of trash and debris.

   e. Placement of permanent or temporary horizontal bracing on earth retaining walls.

   f. Dewatering is incidental to the project.

C. Cold Weather Protection

1. The fill and backfill must be kept from freezing from the time earthwork begins until final acceptance of the work, unless specified otherwise in writing by the Owner's Representative.
2. All fill and backfill which is allowed to freeze shall be thawed and redensified to 95 percent of the maximum density by the Contractor at no expense to the Owner, unless specified otherwise in writing by the Owner's Representative.

END OF SECTION 31 20 00

SECTION 31 25 00
EROSION AND SEDIMENT CONTROL

PART 1 - GENERAL

1.01 DESCRIPTION

A. This section covers all labor, material, equipment, and supervision for installing and maintaining soil stabilization. At Contractor's request and with written approval, at no additional cost to the Owner, Contractor may utilize appropriate erosion control methods in areas not specifically called out or shown on the Drawings to aid in accomplishing topsoil and/or seeding and planting requirements.

1.02 SUBMITTALS

A. The Contractor shall prepare and submit an Erosion and Sediment Control Plan. Engineer shall review and approve Erosion and Sediment Control Plan.

PART 2 - PRODUCTS

2.01 PEAT MOSS

A. Natural, shredded or granulated peat of fine texture, with pH of four to six and a water absorbing capacity of 1,000 to 2,000 percent.

2.02 STRAW

A. Clean, seed free, threshed straw of wheat, barley, or rye.

2.03 JUTE MESH FABRIC

A. Cloth of uniform, open, plain weave, made with undyed and unbleached single jute yarn of loosely twisted construction. Furnish in 48-inch wide rolls, 78 warp-ends per width of cloth, 41 weft-ends per yard, and weighing approximately 1.22 pounds per lineal yard.

2.04 STAPLES

A. U-shaped, approximately six-inches long and one-inch wide made of No. 11 gauge steel wire.

PART 3 - EXECUTION

3.01 CONSTRUCTION

A. General

1. Type and extent of erosion control is shown on Drawings. Approval to use slope protection in areas subject to significant erosion from normal weather conditions will be given. Erosion control in all other areas shall be done only with written approval. Contractor is responsible for maintenance of all graded and/or seeded areas for the duration of the project, whether protected or not.

2. Required erosion control shall be accomplished within 48 hours after finish grading of topsoil or within 24 hours after seeding. Finish grade shall be free of ruts and displacement of topsoil.

B. Slope Protection

1. Slope protection against water erosion shall be done with jute mesh fabric and wire staples. It shall be used on topsoil and/or seeded areas with slope of 10 percent or greater.

2. The Contractor shall place mesh along direction of slope, bury top and bottom ends in soil, and anchor with staples at three feet down the slope and two feet across the slope. The staples shall be inserted to a minimum of two inches below the surface. Edges of jute mesh shall be overlapped three inches.

C. Protection of Flat Areas

1. Protection of gentle slopes (less than 10 percent) seeded with lawn grass to prevent drying and wind erosion shall be with peat moss. Protection of gentle slopes seeded with field grass shall be with peat moss or straw. Erosion control of drainage swales shall be with straw.

2. Peat moss shall be presoaked and scattered evenly to a depth of from one-eighth inch to one-fourth inch thick and rolled to a smooth surface. Do not mound.

3. Straw shall be spread uniformly to form a continuous blanket not less than one and one-half inch loose thickness. Immediately following spreading, straw shall be anchored to soil with V-type wheel land packer, dish harrow or other suitable equipment to form a soil-binding mulch and prevent loss or bunching by wind.

END OF SECTION 31 25 00

SECTION 31 62 16
HELICAL ANCHORS

PART 1 - GENERAL

1.01 SCOPE OF WORK

A. Helical piers shall be screw anchors manufactured from steel pipe specifically for foundation applications, with helical bearing plates welded to them, installed by being advanced into the soil using a screwing motion, and are used to resist applied axial (compression or tension), lateral loading and overturning moments from structures, within designed settlement, uplift, or deformation tolerances. All materials, labor equipment and tools necessary to furnish and install the helical piers shall be provided by the Contractor.

B. Contractor shall be prepared to handle on-site soil conditions, including but not limited to organic silt, silt, and sand, in all of which permafrost can be present throughout the Project area. Contractor shall perform such work as necessary to accommodate soil conditions. No additional payment shall be allowed for such work.

1.02 SUBMITTALS

A. Contractor shall submit a helical pier installation plan detailing equipment and methodology for installation of the helical piers.

B. Pier installation torque measurement and calibration records shall be submitted to Engineer within 24 hours of each completed piers.

PART 2 - PRODUCTS

2.01 ROUND PIPE SHAFT HELICAL ANCHOR ASSEMBLIES

A. Anchor Length:

1. The minimum installed length of the pier from the helix to top of helical pier shall be such that the required installation depth is achieved and such that the tops of the installed helical piers extend to the height above the ground surface as shown in the Plans for the specific application.

2. Helical piers leads shall be a minimum 7 feet long from the pointed to the end of the upper coupling with the upper helix a minimum of 3.5 feet from the upper coupling.

3. Helical extensions shall be a minimum of 7 feet long.

B. Piling Capacity: Helical piers shall provide a minimum axial load-carrying capacity of 30,000 pounds each.

C. Helical Pier Shaft:

1. Cold formed, welded, or seamless steel pipe conforming to ASTM A500 Grade B.

2. Minimum installation torque capacity: 1,500 ft-lb.

3. Minimum Yield Strength: 50 ksi

4. Shaft shall be 2.5” nominal diameter (2.875” O.D.) with 0.2” wall thickness (Standard Weight/ Schedule 40)

5. Shaft end connections between sections shall be via square shaped coupling weld to each end.

D. Helices:

1. Uppermost helix shall have 12-inches outer diameter and lead helix shall have 10-12 inch outer diameter. Upper helix should be spaced approximately three helix diameters from the lead helix.

2. Helices shall have a minimum thickness of 3/8-inch and provide a 3-inch pinch.

3. Steel shall conform to ASTM A1018 with 55 ksi minimum yield strength.

4. Helices shall be welded to pipe sections using a continuous fillet weld on both sides of the helix-to-pipe connection. Leading edge of helices shall be sharpened to minimize soil disturbance during installation.

E. Connection Hardware:

1. Bolts: ASTM A325 Grade L-7 or approved equal.

2. Nuts: ASTM A563

F. Finish

1. All helical pier anchor surfaces (exterior, interior of pipe, etc.), adaptors, extensions, couplings, fittings, bolts, attachment assemblies and all other appurtenances shall be hot-dipped galvanized in accordance with ASTM A123, and ASTM A153.

2. No substitutions of protective coating shall be considered.

PART 3 - EXECUTION

3.01 INSTALLATION

A. Installation Damage: Helical pier that are damaged as a result of exceeding the maximum allowable torque rating during installation or helical pile that is suspected of being damaged as a result of poor workmanship or improper installation techniques shall be removed and replaced at Contractor’s expense. Contractor shall repair damage to ground surfaces and vegetation caused as a result of construction activities.

B. Equipment:

1. Helical pier installation equipment shall be of a rotary type, either truck or track mounted, with forward and reverse capability, electric or hydraulic powered and equipped with a torque monitoring device able to provide installation torque reading on a continuous basis.

2. The equipment shall be capable of positioning and maintaining the helical pier at the designed angle, with minimum drive equipment rating to equal or exceed the maximum torque rating of the specified helical pile.

3. All the required equipment shall be supplied by Contractor.

C. Measure installation torque using torque monitoring instrumentation as part of the installation unit or as a separate in-line device. Calibrated torque monitoring data shall be submitted for review by Engineer. Torque shall be monitored and logged during the entire installation for each helical pier at increments outlined below in "Pier Installation Records." Engineer will not be on-site for all installations, and will require installation records.

D. Position helical piers as indicated in the Plans. Establish the proper alignment at station of installation.

E. Helical pier shall be constructed and installed round, plumb, and true to the required location. Helical piers shall be installed in a manner that does not destroy the soil strength characteristics as they are installed. The helices shall be advanced so that the helix screws or threads into the soil matrix rather than augering through the soil matrix, which would result in heavily damaged auger cuttings around the helix.

F. Helical piers shall be held securely and accurately in position while installing to ensure they are within specified tolerances. Safe and secure connections shall be provided to helical piles and extensions at all times.

G. Sufficient downward pressure shall be applied as to advance helical piers. Under no circumstances shall the helical pier be pushed directly into the soil.

H. Installation shall be executed in a smooth, continuous threading manner, at the rate of advancement equal to one pitch per revolution as to minimize disturbance to the soil during installation. The maximum rate of rotation shall not exceed 20 revolutions per minute.

I. Engineer shall be notified in the event that any obstructions are encountered during installation. The encountered obstructions shall be removed, or the helical and adjacent helical piers relocated as directed by the Engineer.

J. Installation Tolerances of Helical Piers:

1. Maximum Variation from True Location at Ground Surface: ½-inch after installation is completed, non-cumulative.

2. Maximum Variation from Plumb: ½-inch per 10 feet, non-cumulative.

3. Pier caps shall be installed level.

4. In final position, helical piling joints and any other protruding features of the pier assembly shall not be located within the seasonal active layer of the ground.

5. Required Installation Depth: The horizontal centerline of the lower helix of each pier shall be embedded to the minimum depths below the existing ground surface as shown in the Plans.

6. Contractor may need to pilot drill prior to pile installation if permafrost is encountered before required embedment is reached. Hole cut by pilot drill shall not exceed the shaft diameter of the helical pile.

7. Based on torque readings provided by Contractor, Engineer will provide direction to Contractor in the event that sufficient installation torque is not attained at the design embedment depth. Engineer may request field load testing or deeper helical pile installation on any helical pile which, if required, will be negotiated as separate cost items with the Contractor.

K. At no additional cost to Owner, Contractor shall withdraw damaged or defective piles and piles driven outside of the specified tolerances, install new piles within driving tolerances and fill holes left by withdrawn piles as directed by Engineer. Engineer reserves the right to accept or reject questionable installation of helical piles.

L. Pier Installation Records: Maintain accurate installation records of each pier, compiled and attested to by a qualified professional engineer. Include the following data:

1. Project name and number.

2. Name of Contractor.

3. Pier dimensions.

4. Pier identification number.

5. Date and time of installation.

6. Weather conditions and ambient air temperature.

7. Final pier embedment depth.

8. Installation torque measurements shall be recorded for each 3 feet of each helical pier embedment from the ground surface. At deepest 3-feet of embedment, torque measurements shall be recorded for every 1-foot of embedment depth.

M. Helical piers installed with a separation greater than ½-inch but less than 1-inch between the riser shaft and the soil require backfilling and densification with a sand and potable water slurry. The slurry shall be a thawed mineral sand mixed with potable water to a fully saturated state. The slurry shall be placed in fully thawed state in the annular space in nominal 12 inch lifts and hand densified. Hand densification shall be conducted until the slurry no longer settles within the annular space and the slurry is dense and firm. Hand densification may include rod tamping, vibrating the helical anchor riser shaft, ground surface vibration adjacent to the helical pier riser or other means developed by the Contractor. The Engineer shall approve the slurry, slurry placement, and densification methods proposed by the Contractor prior to use.

3.02 QUALITY ASSURANCE

A. All helical pier installations are subject to the Approval of the Engineer. Contractor shall use a Saximater or another Approved device for measuring torque. RPR will not be on-site for all installations, and shall Approve reports based on Saximeter reports.

B. Contractor shall prepare a form for each installation which shows depth and torque. Spreadsheet shall show each installation meets the specifications and details. Each installation will be reviewed and Approved by the Engineer. At the request of the Contractor, the Engineer may furnish a pre-approved form.

3.03 CLEAN UP

A. The construction site shall be restored to its original condition. All underbrush or trees damaged during the drilling operation shall be completely removed and properly disposed of. All drill tailings shall be removed from the site or buried and the surface profile shall be restored to its original grade.

END OF SECTION 31 62 16

SECTION 33 07 00
INSULATED PIPE AND FITTINGS

PART 1 - GENERAL

1.01 SUMMARY

A. Related Sections:

1. Section 33 07 01: Public Water Utility Distribution Piping.

B. Water Mains shall be supplied as insulated pipe and fittings with heat trace channels for use in pressure pipe applications. The minimum service temperature range of all individual components and final products shall be -60 to 100°F unless otherwise specified. All pipe and fittings shall be capable of withstanding the cyclic freezing of water under its rated service pressure without breaks, leaks, gross deformities or impaired service characteristics. The core pipe and fittings shall be in accordance with Section 330701 – Public Water Utility Distribution Piping, as appropriate. The core pipe shall be factory insulated with polyurethane insulation and protected with an outer jacket of 16-gauge aluminum pipe.

1.02 REFERENCES

A. The following specifications are referenced in this document and shall be considered integral to this specification:

1.	ASTM C177	Thermal transmission (guarded hot-plate apparatus)
2.	ASTM C273	Shear properties of sandwich-core materials
3.	ASTM C518	Thermal transmission (heat flow meter apparatus)
4.	ASTM D1248	Polyethylene (PE) extrusion materials – wire and cable
5.	ASTM D1621	Compressive properties of rigid cellular plastics
6.	ASTM D1622	Apparent density of rigid cellular plastics
7.	ASTM D2126	Response of rigid cellular plastics to thermal humid aging (thermal dimensional stability)
8.	ASTM D2657	Heat Joining Polyolefin Pipe and Fittings
9.	ASTM D2837	Obtaining pressure design basis for thermoplastic pipe products
10.	ASTM D2842	Water absorption of rigid cellular plastics
11.	ASTM D3350	Specification for Polyethylene Plastic Pipe and Fittings Materials
12.	ASTM E96	Water vapor transmission of rigid cellular plastics

13.	ASTM E398	Water vapor transmission rate of sheet materials (dynamic relative humidity measurement)
14.	ASTM F714	Polyethylene (PE) plastic pipe (SDR-PR) – based on outside diameter
15.	AWWA C651	Disinfecting Water Mains
16.	AWWA C901	Service Polyethylene Pressure Pipe and Tubing, 1/2-inch through 3-inch for Water
17.	AWWA C906	Polyethylene Pressure Pipe and Fittings, 4-inch through 63-inch for Water Distribution and Transmission
18.	NSF/ANSI-61	Drinking Water System Components-Health Effects
19.	PPI TR-33	Generic Butt Fusion Joining Procedure for Polyethylene Gas Pipe

B. Unless otherwise noted herein or on the drawings, all fittings shall be constructed utilizing core pipe of the same material, resin, and dimensions as that used for the core pipe of the straight lengths.

1.03 SUBMITTALS

A. The Contractor shall furnish to the Engineer for approval one (1) copy of the submittals indicated below. No work shall commence on any item until the required shop drawing submittals have been approved. The submittals shall include:

1. Product Data: Submit manufacturer's standard printed information and literature for all materials to be incorporated in the work.

2. Shop Drawings: Submit dimensionally correct (scaled) shop drawings for all items to be fabricated prior to beginning fabrication.

3. Fabrication Procedures: Submit a written description of the methods/procedures to be used in fabricating the pipe and fitting.

4. Inspections and Testing of Pipe and Fittings:

   a) Submit proposed hydrostatic testing procedure for review and approval before any testing is undertaken.

   b) Submit results of foam density tests on daily basis for all specified inspections and testing of pipe and fittings.

5. Quality Assurance program in accordance with 1.3.

6. Laboratory Testing Results:

   a) K-factor testing of insulation.

b) Core pipe/insulation bond

c) Density of insulation

d) Testing frequency shall be a minimum of one set of tests per 400 linear feet of pipe.

1.04 QUALITY ASSURANCE

A. The manufacturer shall be experienced and regularly engaged in the production of pre-insulated piping systems. The manufacturer shall understand the system design and its intent and shall produce components suitable to accomplish that intent. Any deficiencies in the Drawings or these Specifications which may jeopardize the performance of the system shall be brought to the immediate attention of the Engineer, prior to submittal of product description and information for acceptance, whenever possible.

B. Engineer shall have open access to the fabrication facility and any sub-tier suppliers to assure conformance with the Specifications and quality of workmanship.

C. The Contractor shall submit to the Engineer for approval a Quality Assurance program which incorporates as a minimum the following:

D. A description of the method of manufacture.

E. A description of the methodology for the quality assurance program.

F. The Contractor shall implement the Quality Assurance program to assure compliance with all requirements of this Specification.

G. A record of all tests which were performed shall be provided to the Engineer as required. (As a minimum, all test reports shall be submitted to the Engineer upon completion of work).

H. Where a method of testing has not been specified, the Contractor shall submit detailed test procedures for approval by the Engineer.

I. Any deficiency found in a stick of pipe shall be cause for rejection of the entire stick of pipe. All rejected pipe shall be replaced by the Contractor at no additional cost to the Owner.

J. All insulated pipe and fittings supplied under this specification shall utilize the same manufacturer of core pipe. Contractor shall identify the core pipe manufacturer with his submittal. Additionally, since the City of Bethel procured pipe materials ahead of the construction project, the pipe material purchased by the Contractor must be compatible with the already acquired pipes.

PART 2 PRODUCTS

2.01 CORE PIPE

1. All core pipe shall be made of high-density polyethylene (HDPE) that conforms to all applicable provisions and requirements of the latest revision of AWWA C901 and AWWA C906 and, by inclusion, all appropriate standards referenced therein.

2. Core pipe shall be in accordance with Section 33 07 01 – Public Utility Distribution Piping as applicable.

2.02 INSULATION

A. Insulation between core pipe and outer jacket of all pipe and fittings shall be low-density rigid closed-cell urethane insulation with a nominal thickness as shown on the drawings. It shall be applied and cured in strict accordance with the manufacturer's recommendations and good commercial practices such that the resulting insulation completely fills the annular space between core pipe and outer jacket and is free of defects affecting its intended purpose.

B. Urethane insulation shall exhibit the following properties and characteristics specified by the referenced ASTM tests below.

1.	ASTM C518 or C177	Maximum K-factor, as produced	0.15 btu-in/hr-ft2-°F
2.	ASTM D1622	Core Density Range	2.0 to 4.0 lbs/ft3
3.	ASTM D1621	Minimum Compressive Strength	35 psi
		(parallel and perpendicular to pipe axis)	
4.	ASTM D2842	Maximum Water Absorption	0.05 lb/ft3
5.	ASTM D2126	Dimensional Stability	1% at -20°F
		(Maximum Linear Change)	3% at +100°F

C. Exposed urethane insulation faces at pipe and fitting ends shall be coated to protect against physical abuse, UV exposure during shipping and storage, and against water intrusion in service. The coating shall be suitable for direct application over urethane insulation with no deleterious effects to the insulation or coating. The coating shall be formulated for long-term service and retained flexibility over extended periods of exposure to sunlight, harsh weather, and saltwater spray. The strength of the adhesive bond of the coating to the insulation shall be greater than the tensile strength of the coating. In the event the coating is nicked or an edge is rolled up in handling, the coating that has been dislodged shall tear free from the coating still adhering to the insulation rather than pull the balance of the coating off as a sheet.

D. The coating shall be applied and cured in strict accordance with the manufacturer's recommendations and good commercial practice such that the finished product is free of defects affecting its intended purpose.

E. The coating material shall exhibit the following properties and characteristics:

1.	ASTM E398 or E96	Maximum Water Vapor Permeance	1.0 perm
		Dry Film Thickness Range:	15 to 63 mils

2.03 METAL OUTER JACKET

A. Metal outer jackets for pipe and fittings shall be constructed of 16-gauge internal helical lock-seam corrugated aluminum pipe with a nominal diameter as shown on the drawings. Aluminum alloy material shall be 3004-H34 with a 7072 coating on the outside of the jacket or 5052-H32. All helical seams shall be continuous, tightly locked and folded. The outer jacket of all pipe and fittings shall be watertight under a five-foot head of water and the outside of the jacket shall present a relatively smooth, flat overall appearance. Standard corrugated culvert pipe is not acceptable.

B. The outer jacket corrugations shall be between 3/16-inch and 3/8-inch deep as measured from the flat area between corrugations to the bottom of the corrugation on the outside of the jacket and shall be spaced no more than 2 2/3-inches apart and formed diagonally around the pipe, resulting in not less than 2 nor more than 10 complete corrugations crossing the pipe's circumference at a given cross-section.

C. The nominal diameter shall be the inside diameter as measured between the innermost portion of the corrugations, with a dimensional tolerance of +1/2".

D. All joints in the aluminum outer jacket fabricated around fittings shall be welded with a continuous bead, resulting in a finished jacket that is watertight per the requirements of section 2.3A.

E. The Contractor shall provide company name and production date (month and year) on the outer jacket of each pipe and fitting. Information shall be stamped onto an aluminum plate with 1/8-inch to 1/4-inch high lettering, and the plate shall be riveted onto the jacket with a minimum of 4 aluminum rivets. The plate shall be secured to the jacket within 8" of one end of the jacket.

F. All surfaces of the outer jacket, including end-cuts and welds, shall be finished such that no jagged edges exist that could cause personal injury.

G. The interior of the jacket shall be free of oils, grease, or other residue that could interfere with the adhesion of insulation to the outer jacket.

2.04 HEAT TRACE CHANNEL

A. Heat trace channels shall be fully enclosed, in direct contact with the core pipe for its entire length, and there shall be no intrusion of insulation between the heat trace channel and the core pipe unless otherwise specified.

B. Heat trace channels for all straight lengths of pipe shall be made of PE or ABS material and shall be half-moon shaped with inside dimensions of 1 1/2-inches to 1 3/4-inches wide by 3/4-inch to 1-inch high and installed as shown on the drawings. The heat trace channel shall extend 2-inches past the insulation face of the pipe, with ends cleanly cut, square, smooth, and free from burrs or other protrusions that could interfere with installing the heat trace in the field, as shown in the drawings.

C. Heat trace channels installed along angular bends of fittings shall be constructed with 1-1/2-inch diameter flexible, liquid-tight PVC non-metallic conduit. Conduit material shall be nonconductive and non-corrosive, with a smooth interior surface that will maintain the internal diameter in tight radius bends. Conduit material shall be UL listed for outdoor use. A transition

fitting shall be installed on all ends of heat trace channel that results in a half-moon channel protruding from the insulation face as specified for straight pipe channel. All transition fittings shall be constructed with smooth interiors, free from burrs or other protrusions that could interfere with installing the heat trace in the field, as shown in the drawings.

D. Pieces of half-moon heat trace channel to fit within the joint area (jumpers) shall be provided with each piece of pipe and with each fitting. The jumpers must be sized to slip snugly over the outside of the specified straight pipe heat trace channel with an overlap of not less than 1 ½-inches on each side after a typical field fusion of individual lengths of pipe.

2.05 GLYCOL TRACE CHANNEL

A. Glycol trace channels shall be fully enclosed and constructed of PE or ABS material with a minimum thickness of 0.10-inch. The channel shall be in direct contact with the core pipe for its entire length and there shall be no intrusion of insulation between the channel and the core pipe unless otherwise specified.

B. The glycol trace channel shall be oval-shaped and sized 6-5/8 inch by 3-1/4 inch to allow adequate interior space to conveniently pull two each 2-inch SDR-11 HDPE pipes within the channel. Channels used in fittings shall be mitered and fused together to create a channel that follows the curvature of the fitting.

2.06 MANUFACTURING AND DIMENSIONAL TOLERANCES

A. Allowable offset of the centerline of the outer jacket and core pipe shall be not more than 1/4-inch at the pipe ends. Elsewhere along pipe lengths the centerline offset shall not be greater than 3/8-inch. Allowable offset of the centerline of the glycol trace channel and core pipe shall be not more than 3/8-inches.

B. The minimum temperature of all components used to manufacture pipe and fittings shall be 50 °F at the start of fabrication. The fabricated pipe shall be placed in a facility maintained at a temperature of 50 °F or greater for a minimum of 12 hours after fabrication.

C. All elbows shall have a bend radius as specified in the drawings with a tolerance of + 2 degrees without reversion. All elbows must maintain normal outside diameters along their entire length without tolerance as per ASTM-F714.

D. All branches of fabricated fittings must lie in a single plane with a maximum deviation of + 2 degrees.

E. The length of core pipe protruding from the insulation on the ends shall be 12 inches + 1/4 -inch. The core pipe ends shall be smooth and oriented perpendicularly to the core pipe longitudinal axis + 1/8-inch.

F. The outer jacket shall be cut in one pass perpendicular to the length of the jacket + 1 degree. The coupling on bell ends shall be perpendicular to the length of the jacket + 1 degree and flush with the jacket end with a tolerance of -1/8-inch. No part of the coupling shall protrude beyond the end of the jacket as determined by placing a straight-edge across the jacket at any two points. The bell end of the coupling shall be flush with the insulation and outer jacket. Before coating, the plane of the exposed insulation face at bell and spigot ends shall be perpendicular

to the centerline axis of the outer jacket + 1/8-inch. The insulation profile of the coated ends shall not exceed a relief deviance of + 1/4-inch across the face.

2.07 FABRICATED FITTINGS

A. All fusion joints used in fabricated fittings shall be documented by a computer that records pressure and temperature applied at each fused joint. Computer printouts and electronic data for each fitting shall be made available to the owner upon request. The contractor shall ensure that each joint is fused at the temperature and pressure recommended by the pipe manufacturer in order to achieve the maximum pressure rating for that joint.

B. All fittings for each project shall be labeled with a unique identifier that corresponds with the fusion computer printouts for each fitting.

2.08 INSULATING

A. All Federal and State regulations applicable to the type of insulation and its use shall be strictly adhered to.

B. Insulation shall be placed into the pipe by a single injection application. Fittings may be manufactured using one insulation injection for each open end of the fitting. In no case shall the jacket be drilled to perform, monitor, or inspect the injection.

C. The City procured pipe may have damage to the insulation at the ends of the pipe. Contractor is to spray foam the damaged ends to make insulation seamless when joint kits are installed.

D. The maximum allowable void size is 0.05 cubic inches (for reference, a 3/8-inch cube is .05 cubic inches).

E. Insulation and chemicals shall be prevented from coming in contact with the end or inside of the exposed core pipe.

F. The heat trace channel shall be secured to the outside of the core pipe, parallel to the pipe axis, prior to insulating. The channel shall protrude 2-inches past the insulation faces at each end of the pipe or fitting, be free of insulation residue and foreign substances, and open to the minimum cross section specified throughout.

G. The glycol trace channel shall be secured to the outside of the core pipe, parallel to the pipe axis, prior to insulating. The channel shall be flush with the insulation faces at each end of the pipe or fitting, be free of insulation residue and foreign substances, and open to the minimum cross section specified.

2.09 CORE PIPE/INSULATION BOND

A. Core pipe and fittings shall be bonded to the insulation with a minimum shear bond strength of 15 psi, or in such a manner as to produce insulation-to-insulation separation when a sample is tested in shear.

B. The core pipe surface preparation will be performed in a manner that does not leave foreign material imbedded in the plastic. Gouges or scratches in the pipe surface that exceed the tolerance specified by the pipe manufacturer for the pipe pressure rating shall be cause for

rejection.

2.10 PRODUCTION TESTING AND INSPECTION

A. Only finished pipe lengths and fittings that meet the requirements of these specifications and drawings shall be used for destructive testing. Should any product fail to meet the visual quality control specifications listed below, that product shall be either re-built to meet the specifications or rejected. Only those products that meet all visual quality control specifications shall be considered final products suitable for receipt by the Owner or for laboratory or other destructive testing.

1. VISUAL QUALITY CONTROL:

a. DIMENSIONAL TOLERANCE: Each length of pipe and each fitting will be examined by the Contractor for off-set tolerances, insulation cut-back distances, exposed insulation face alignment and relief profile, and alignment and smoothness of core pipe ends.

b. INSULATION INTEGRITY: Completed pipe and fitting ends shall be inspected for voids in excess of 0.05 in3 or discontinuities by the Contractor prior to coating. Any glazing left on the uncoated pipe end from the forms used during the insulating operation shall be removed before coating.

2. LABORATORY TESTING

a. The density and K-factor shall be measured on insulation specimens of the appropriate size and under the specified conditions as set forth in the applicable ASTM test. Insulation specimens shall be retrieved by cutting a 12-inch section of insulated pipe from a production sample. The remaining length shall be trimmed to the dimensional tolerances of this specification to allow Owner use of that pipe section.

b. Should the Contractor choose to test the "K" factor as outlined in ASTM C518, the testing apparatus shall be calibrated within 24 hours of the test using a calibration standard certified accurate by the National Bureau of Standards (NBS). The "K" factor test sample shall be removed from the insulated pipe, prepared for testing, and left open to the atmosphere at 70°F for a minimum of 24 hours prior to testing.

c. In addition to the testing identified above, the following tests shall be performed to verify the quality of the finished product:

1) Core pipe/insulation bond:

a) Two 6-inch lengths of cured insulated pipe shall be cut from one uncoated insulation face end of completed pipe length. The remaining length shall be trimmed according to the dimensional tolerances of this specification and coated to allow Owner use of that pipe section.

b) One specimen shall be tested at +70°F. The other specimen shall be brought to -60°F in 4 hours or less, and remain there for at least 24 hours before testing. Acceptance will be indicated by a minimum shear bond

strength of 15 psi and insulation-to-insulation (or insulation-to-insulation pipe surface film) separation or tearing.

c) Testing shall be conducted as indicated on the attached drawing labeled "Core pipe/insulation bond test setup."

2.11 PACKING

A. The core pipe spigot ends of all pipe and fittings shall be capped with PE pipe caps (Caplugs, or approved equal) and the plugs taped to the pipe with black electrical tape (such as 3M #33+) or other approved tape after final inspection and prior to shipment. Duct tape shall not be used to secure the PE pipe caps to the pipe spigot ends.

B. Pre-insulated pipe shall be packed in bundles with a maximum gross weight of 4,000 pounds per bundle unless otherwise specified by the Owner. The end geometry of each bundle shall be rectangular. Each layer of pipe within the bundle including the bottom layer shall rest upon a minimum of 3 each 4-inch x 4-inch cross cleats banded to that individual layer using 1 1/4-inch steel strapping. All cleats shall feature a 45-degree stop block at least nominal 4-inches high by 4- inches long fastened securely to both ends of the cleats to prevent the pipe from rolling off the cleat when the banding is cut. The outer cross cleats shall be installed between 1 to 2-feet from the insulation face of the pipe ends with the middle cleat centered on the bundle. In addition, 1 1/4-inch steel straps shall securely fasten all the layers together to form a complete bundle.

Bundles 5 pipes wide by 5 pipes high are recommended.

C. All fittings and couplings shall be packaged in crates sheathed with minimum 1/2-inch sheathing not to exceed 4 ft x 4 ft x 8 ft. Minimum nominal 2-inch x 3-inch framing members shall be installed in all corners of the crate and fastened securely to the sheathing. On crates longer than 6- feet, framing members shall be installed along the shorter centerline of all the 4 long panels. The framing members shall be securely fastened to each other and to the sheathing. For crates 4-feet long or less, 2 each 4-inch x 4-inch cleats shall be installed on the bottom edges of the crate to provide for forklift handling. For crates longer than 4-feet, 3 cleats shall be installed, with the middle cleat centered on the crate. These cleats shall be fastened through the bottom sheathing and also banded to the crate with 1 1/4-inch wide steel bands that wrap around the entire crate. The crates shall be designed to stack 3 crates high, provide protection to the contents during rough ocean, air freight transport, and on-site handling without damage.

2.12 FINAL INSPECTION

A. After completion of the quantity of pipe and fittings contracted for, the Owner may perform a final inspection at the fabrication point. The certified results of all required laboratory tests made during production by the Contractor shall be made available in report form at this time. During the final inspection, the product packing will be inspected to see that all specifications listed in section 3.6 have been met. Should any of the packing fail to meet the specifications, the Contractor shall re-pack the pipe to meet the specifications.

2.13 JOINT INSULATION KIT

A. Joints between segments of insulated pipe and fittings shall be installed using a two-part field poured polyurethane foam.

1. Two-part foam mixing chemicals shall be shipped to the site in separate containers of 50 gallons or less each.

2. Contractor shall provide two-part form mixing chemicals in sufficient quantity to fill all required joints.

3. Chemicals shall be applied to the joint using a foam dispensing gun which mixes the chemical immediately prior to injection into the joint.

4. Joint kit foam shall only be installed by a qualified individual who has taken part in a training program offered by the foam supplier. Proof of qualification shall be submitted to Engineer prior to foaming of any joints.

5. Foam shall be installed using an aluminum coupling band form to be removed after foam is cured. Minimum two holes are required in the coupling band. One hole for injection and the other to vent air.

B. After curing, foam shall be covered by a protective heat shrinkable sleeve specifically designed for pipes made of HDPE, Canusa Superseal or approved equal.

C. Joint kits shall include foam insulation, heat shrink, and coupling band form complete with bolts, nuts and washers to field fabricate the pipe joint.

D. Joint kits shall be sized for 24-inch cut back (12 inches for each pipe) and 12-inch jacket overlap (6 inches for each pipe) for a total heat shrink sleeve length of 36 inches.

E. Manufacture to fit the fitting or the pipe joint.

PART 3 - EXECUTION

3.01 CORE PIPE FUSION

A. Install core HDPE piping in accordance with Section 330701 – Public Utility Distribution Piping as applicable.

3.02 JOINT INSULATION KITS

A. Construct all piping, heat trace channels, glycol heat trace piping and electrical heat trace before installing joint insulation kits.

B. Joint insulation kits shall only be installed on piping that has passed hydrostatic pressure test as described in Section 330701 – Public Utility Distribution Piping ..

C. Apply release agent to inside of removable coupling bands prior to application of foam.

D. Inject 2-part foam insulation in liquid form through one hole in top of aluminum coupling band.

E. Remove band and inspect foam insulation at joint for void space.

1. Fill small voids (less than 2-inches in diameter) with spray foam insulation, DOW Great Stuff, or equal.

2. Fill large voids (greater than 2-inches in diameter) by re-installing aluminum joint kit band and injecting additional foam insulation. Cut out cured foam as necessary to apply new foam to void area.

3. Remove aluminum band and re-inspect foam. Repeat above steps if required.

F. Install heat shrink sleeve over joint kit, Canusa Wrap or equal. Follow Manufacturer's installation instructions.

END OF SPECIFICATION 33 07 00

SECTION 33 07 01
PUBLIC WATER UTILITY DISTRIBUTION PIPING

PUBLIC WATER UTILITY DISTRIBUTION PIPING

PART 1 - GENERAL

1.01 GENERAL

A. The work includes construction of new public water utility distribution piping or/and rehabilitation of existing public water utility distribution piping. Work also includes construction of water utility service piping and connections of services to water mains. Work also includes testing, disinfection, and connecting to existing mains. Locations for existing and new water piping are shown in the Plans. Work will include testing, disinfection, and connection to an existing water main and water treatment plant.

B. All piping is above grade supported on either treated timber sleepers or helical pile supported steel framing unless it is in a casing pipe. Locations where each type of support is used is shown in the Plans.

C. All new public water utility distribution piping will consist of insulated High Density Polyethylene (HDPE) piping with corrugated aluminum jacketing as shown in the Plans and described in this Specification and elsewhere in the Project Documents.

D. Beyond owner procured materials, all additional HDPE pipe and fittings shall be from a single manufacturer, who is fully experienced, reputable and qualified in the manufacture of the HDPE pipe to be furnished. The pipe shall be designed, constructed and installed in accordance with the best practices and methods and shall be in accordance with these specifications.

E. The existing City Subdivision Water Treatment Plant Loop “A” will have its flow reversed. Before the flows is reversed, all existing circulation pumps impacted within Loop “A” will have their supply and return lines switched by the Contractor. Contractor will submit a plan for adjusting the existing circulation pumps for review and approval by the Engineer. The service line will be out of service for a short period of time and notice to the homeowner’s needs to occur 48 hours prior to the work.

F. Connecting to existing City Subdivision Water Treatment Plant Loop “A” may require depressurization of the main. All impacted residences shall be notified of any shut-downs 48 hours prior to the shut-down. If the shut-down is longer than 6 hours, temporary water shall be provided to impacted owners.

1.02 REFERENCES

A. ASTM International:

1. ASTM D3035 – Standard Specification for PE Pipe (DR-PR) Based on Controlled Outside Diameter

2. ASTM D3261 – Butt Heat Fusion PE Fittings for PE Pipe and Tubing

3. ASTM D3350 – Standard Specification for PE Pipe & Fittings Materials

4. ASTM D1238 – Melt Flow Index

5. ASTM D1505 – Density of Plastics

6. ASTM D2837 – Hydrostatic Design Basis

7. ASTM F1055 – Standard Specification for Electrofusion Type Polyethylene Fittings for OD Controlled PE Pipe and Fittings

B. American Water Works Association

1. AWWA C651-05 Disinfecting Water Mains

2. AWWA C901 - Polyethylene (PE) pressure Pipe & Tubing, ½ inch through 3-inch for water.

3. AWWA C906 - Polyethylene (PE) pressure Pipe & Fittings, 4-inch through 63-inch for water.

C. National Sanitation Foundation

1. NSF Standard #14 – Plastic Piping Components and Related Materials

D. Plastic Pipe Institute

1. TR-33/2012 – Generic Butt Fusion Joining Procedure for Field Joining of Polyethylene Pipe

1.03 WATER SUPPLY PIPING

A. See plans for proposed water main and water service lines improvements.

B. A portion of existing Loop "A" flows will be reversed. Before this loops flows a different direction, all the circulation pumps return and supply lines must be switched. This may require obtaining access from the homeowner and completing this task in a timely matter. A notice of when the flow is reversed and flushing time for dislodge sediments should also be provided to the homeowner.

C. Contractor shall not inhibit the Owner's efforts to operate and maintain any part of the existing utility. Owner shall have full access to the existing system at all times.

D. The Owner reserves the right to make use of any portion of the proposed work prior to completion of the entire Contract without invalidating the Contract and without constituting acceptance of any of the work.

1.04 SUBMITTALS

A. Section 01 33 00 - Submittal Procedures: Requirements for submittals.

B. Product Data: Submit data on pipe materials, pipe fittings, valves and accessories.

C. Shop Drawings: Submit dimensionally correct (scaled) shop drawings for all items to be

fabricated prior to beginning fabrication.

D. HDPE Fusion Procedure Certifications (Butt Fusion and Electrofusion) for all personnel performing butt fusion and/or installing electrofusion couplings in the field on HDPE pipe. Contractor shall also submit evidence of experience for the installers of Fusions and Electrofusion Couplings.

E. The Contractor shall submit his plan for testing to the Engineer for review and approval at least 10 days before starting testing.

F. The Contractor shall submit his plan for flushing to the Engineer for review and approval at least 10 days before starting testing.

G. The Contractor shall submit his plan for disinfection to the Engineer for review and approval at least 10 days before starting testing.

H. The Contractor shall submit a plan for any water main shut-downs and provide copies of notices for approval to Engineer.

I. The Contractor shall submit a plan for circulation pump reversal along existing loop "A".

1.05 CLOSEOUT SUBMITTALS

A. Project Record Documents: Record location of pipe runs, connections, valves, cleanouts and invert elevations.

B. HDPE butt fusion and electro fusion joint records.

PART 2 - PRODUCTS

2.01 NO LEAD RULE

A. All pipe, fittings, and brass components in contact with potable water are to comply with Public Law 111-380 (No Lead Rule).

2.02 MATERIALS FOR PIPE (ALL SIZES)

A. Materials used for the manufacture of polyethylene pipe and fittings shall be made from a PE 3408 high density polyethylene resin compound meeting cell classifications 34534C per ASTM D3350; and meeting Type 111, Class C, Category 5, Grade P34 per ASTM D1238.

B. High Density Polyethylene (HDPE) pipe shall comply with AWWA Specifications C906 or C901 as appropriate for size.

C. If rework compounds are required, only those generated in the Manufacturer's own plant from resin compounds of the same class and type from the same raw material supplier shall be used.

D. Dimensions and workmanship shall be as specified by ASTM F714. HDPE fittings and transitions shall meet ASTM D3261. HDPE pipe shall have a minimum density of 0.955 grams per cubic centimeter. All HDPE pipe and fittings shall have a Hydrostatic Design Basis (HDB) of 1,600 psi.

E. HDPE pipe and accessories 1-inch diameter and larger, shall have a Standard Dimension Ration (SDR) of 11 and be pressure rated to a minimum of 160 psi.

2.03 FITTINGS

A. All molded fittings and fabricated fittings shall be fully pressure rated to match the pipe SDR pressure rating to which they are made. All fittings shall be molded or fabricated by the manufacturer. No Contractor fabricated fittings shall be used unless approved by the Engineer.

B. The manufacturer of the HDPE pipe shall supply all HDPE fittings and accessories as well as any adapters and/or specials required to perform the work as shown on the Drawings and specified herein.

C. All fittings shall be installed using butt-fused fittings or flanged adapters and must be approved by the Engineer.

D. All fittings and nuts and bolts shall be Type 316 stainless steel.

E. All transitions from HDPE pipe to other pipe materials and valves shall be made per the HDPE pipe manufacturer's recommendations and specifications. A molded flange connector adapter with 316 stainless steel back-up ring assembly shall be used for pipe type transitions. Back-up rings shall mate with cast iron flanges per ANSI B16.1. No solid sleeves shall be allowed between material transitions. Flanges shall be ANSI Class 125.

2.04 VALVES

A. Valves for HDPE water mains shall be polyethylene ball valves suitable for use with piping complying with AWWA C901 and AWWA C906 as applicable.

1. Valves 2-inches and smaller shall have an integral stainless steel valve stem. Valves larger than 2-inches shall have polyethylene valve stem.

2. Valve body shall be fully fused with no metal internal parts.

3. Valve shall provide full port through opening, with no flow obstructions, when in open position.

4. Valves shall be rated for full pressure rating of connecting pipe, 160 psi minimum.

5. Install valves shall using butt-fusion.

B. Valves shall be NSF certified for use with potable water.

C. Manufacturer: Polyvalve, Poly-Water Valves or approved equal.

2.05 PIPE IDENTIFICATION

A. The following shall be continuously indent printed on the pipe or spaced at intervals not exceeding 5-feet.

1. Name and/or trademark of the pipe manufacturer.

2. Nominal pipe size.

3. Dimension ratio.

4. The letters PE followed by the polyethylene grade in accordance with ASTM D1248 followed by the hydrostatic design basis of the piping.

5. A production code from which the date and place of manufacture can be determined.

2.06 ELECTROFUSION COUPLINGS

A. Electrofusion couplings should be avoided for fusion of HDPE pipe. Where required, couplings shall be installed by a certified technician. Electrofusion couplings shall be approved by pipe manufacturer of owner procured pipe.

B. One-piece construction, tubular, and same material as the adjacent HDPE pipe.

C. Couplings shall have attached around the circumference at each end a fusion wire which when energized shall provide a complete watertight fusion weld.

D. Fusion weld wires are factory attached and with sufficient lead for connection to factory supplied power converter.

E. Couplings shall be capable of sustaining test pressure without damage. Contractor shall supply one extra coupling per four installed for future use by Owner.

F. Electrofusion couplings shall not be used for outer jacket sleeves or to repair damaged piping.

G. Installation of coupling shall be in accordance with manufacturer's written instructions and using manufacturer's recommended tools and materials.

2.07 HYDRANTS

A. Fire hydrants shall be as shown on Construction Drawings or Approved Equal and shall conform to AWWA Specification C-502-94, "Dry Barrel Fire Hydrants." All connections shall be mechanical joint unless otherwise approved by Owner's Representative.

B. All "single pumper" hydrants shall have two, two and one-half inch hose connections and one four and on-half inch pumper connections. All "double pumper" hydrants shall have one two and one-half inch hose connection and two four and one-half inch pumper connections. All hose threads shall be National Standard threads. The working parts of all fire hydrants shall be bronze or non-corrodible metal.

C. Painting and coating shall be in accordance with the cited AWWA specifications for dry barrel fire hydrants Section 4, Article 4.2 (Paint). Color of paint shall be red.

D. The adjustment of hydrant barrel and valve box to the required finish grade will be at the expense of the Contractor.

E. All hydrants shall have drain outlets at the base of the barrel. Plugs shall be removed prior to installation.

F. Fittings for hydrants shall be Ebba Iron Megalug or Engineer Approved Equal. Fittings shall be

fully restrained.

G. Handwheels shall be provided for all gate valves.

2.08 EXTERIOR INSULATION BOARD

A. The insulation board shall be "Styrofoam HI-35" extruded polystyrene insulation as manufactured by the Dow Chemical Company, "Certiform" as manufactured by Minnesota Diversified Products, Inc., 1901 13th Street, N.E., New Brighton, Minnesota, 55112 or approved equal that shall conform to the following requirements.

1. Density: 2 p.c.f minimum
2. Compressive strength psi at yield or 5% deflection: 35 minimum
3. Water absorption, % by volume (ASTM C272-53): 0.25 maximum
4. Conductance per inch, BTU-inch/or per (hr)(Ft^2)(^oF)(ASTM C177-63): 023 minimum

PART 3 - EXECUTION

3.01 EXAMINATION

A. Section 01 00 00 – General Requirement: Verification of existing conditions before starting work.

3.02 CONSTRUCTION STAKING

A. The Contractor shall furnish the construction stakings.

B. Horizontal distances are from center to center of fitting or appurtenances unless otherwise noted. Elevations are to pipe invert.

C. Contractor furnished survey shall be done by a qualified and registered surveyor. The Contractor shall provide a competent surveryor to maintain line and grade during all pipe-laying operations with a transit and engineer's level at noaddtional cost to the Owner. Accurate survey notes shall be kept in accordance with accepted survey practice. A copy of these notes shall be give to the Owner's Representative as part of the record drawing submittal.

D. A maximum deflection of 0.2 foot deviation from design elevation and alignment will be allowed. The pipe shall be straight to the eye unless otherwise call for on the Drawings.

3.03 WATER REMOVAL

A. During excavation and pipe installation, the Contractor shall remove by pumping or other approved means all water above the bottom of the trench. Contractor shall obtain all permits necessary for dewatering.

3.04 WATER MAINS & SERVICES

A. Install water mains on helical pile supported steel foundations or proposed timber foundation supports unless in casing pipe or direct bury.

B. For casing pipes and in direct bury applications, minimum cover shall be as shown on the plans to the outside diameter of the pipe. The excavation and backfill as specified in Section 31 20 00 Earth Moving.

1. Backfill Material shall be two inches maximum size within one foot surrounding the pipe. The Contractor shall carefully place and thoroughly compact backfill around and above pipe to minimum 95 percent density.

2. After the lines have been inspected, the trenches shall be backfilled. Backfill may be accomplished prior to testing at the Contractor's risk.

3. Restore surface to its original elevation or finished grade as shown on the Plans.

4. Marking tape 12” above main shall be installed in direct bury installation.

C. Contractor shall work around, support and protect existing water and sewer mains and services as required to complete the Work.

D. Contamination Prevention:

1. Contractor shall take particular care to keep potential sources of contamination from collecting around water mains and services.

2. Adequate provisions shall be made to direct surface flows and other sources of potential contamination away from the work area during construction.

E. Water Services shall be installed in accordance with Section 33 12 13 Water Service Connections.

3.05 JOINING METHOD (BUTT FUSION)

A. HDPE pipe shall be joined with butt, heat fusion joints as outlined in ASTM D2657 and conform to the Generic Butt Fusion Joining Procedure for Field Joining of Polyethylene Pipe, Technical Report TR-33/2012, published by the Plastic Pipe Institute (PPI) unless otherwise authorized by Engineer. All Joints shall be made in strict compliance with the manufacturer’s recommendations. Personnel performing butt fusion of HDPE pipe shall be certified in the procedure by a representative of the fusion machine manufacturer. Contractor is to submit evidence of the installer’s certification. Butt Fusions will be made by an installer who has previous experience on at least three projects.

B. Lengths of pipe shall be assembled into suitable installation lengths by the butt-fusion process. All pipes so joined shall be made from the same class and type of raw material made by the same raw material supplier. Pipe shall be furnished in standard laying lengths not to exceed 50-feet.

C. The first fusion shall be a trial fusion in the presence of the Resident Project Representative. The following shall apply:

1. Heating plate surfaces shall be inspected for cuts and scrapes and shall be free of dirt and residue. Heater surfaces should be between 400°F (minimum) and 450°F (maximum). Measure the temperature at 12:00, 3:00, 6:00, and 9:00 o’clock positions using a pyrometer or infrared thermometer at locations where the heating plate will contact the pipe/fitting ends. The maximum temperature difference between any two points on a

single heating surface must not exceed 24°F. If this temperature is exceeded, the heating plate shall be cleaned per the manufacturer's recommendations.

2. The fusion or test section shall be cut out after cooling completely for inspection.

3. The test section shall be 12" or 30 times (minimum) the wall thickness in length and 1" or

   1.5 times the wall thickness in width (minimum)

4. The joint shall be visually inspected as to continuity of "beads" from the melted material, and for assurance of "cold joint" prevention (i.e. – joint shall have visible molded material between walls of pipe). Joint spacing between the walls of the two ends shall be a minimum of 1/16" to a maximum of 3/16".

D. The polyethylene flange adapters at pipe material transitions shall be backed up by stainless steel flanges conforming to ANSI B16.1 and shaped as necessary suit the outside dimensions of the pipe. The flange adapter assemblies shall be connected with corrosion resistant bolts and nuts of Type 316 Stainless Steel as specified in ASTM A726 and ASTM A307. All bolts shall be tightened to the manufacturer's specified torques. Bolts shall be tightened alternatively and evenly.

3.06 JOINT METHOD (ELECTROFUSION COUPLINGS)

A. Perform installation of electrofusion couplings in accordance the coupling manufacturer's instructions. At all times, protect the fusion site from inclement weather (rain, wind or snow). At all times, provide recommended ambient temperatures for proper electro-fusion.

B. Check pipe ovality. If out-of-round conditions exist and exceed the manufacturer's requirements, re-rounding clamps shall be used to bring the pipe back into a round condition.

C. Cut both pipe ends square with a pipe cutter and then clean both ends to removed dirt, mud and other debris. Clean water may be used for initial cleaning prior to scraping. Check pipe surface for any embedded debris that may cause damage to the scraping tools.

D. Measure the total length of the coupler to be installed and make a mark on one pipe a distance the full coupling length from the pipe end. Make a mark on the other pipe end a distance equal to the ½ the length of the coupling.

E. Completely scrape the first pipe end the full coupling length and the second pipe end half coupling length to remove oxidation and other contaminates. The first pipe end shall be scraped the full coupling length to prevent contamination of the coupler by sliding over un-scraped pipe.

   1. Use only appropriate scraping tools as recommended by the coupling manufacturer and follow the manufacturer's recommended scraping procedures.

   2. Scrape the pipe surface until the outer layer or "skin" of the pipe has been removed to expose a clean, virgin pipe material.

   3. Inspect the entire circumference of the scraped area to ensure total scraping coverage.

   4. Do not use abrasives, grinding wheels or other inappropriate tools that do not cleanly

remove the contaminated material.

5. If after the first scrape the fitting does not slide onto the pipe easily, pipe may be scraped again to achieve the proper pipe fit. Always assure uniformity in the pipe scrape.

F. Avoid touching the scraped pipe surface or the inside of the coupler as body oils and other contaminates can affect fusion joint performance.

1. If the surfaces become contaminated, clean thoroughly with a clean lint free towel and isopropyl alcohol (consult coupling manufacturer for appropriate minimum percentage) and allow to dry before assembling.

2. Additional scraping can be performed if the pipe section becomes contaminated before fusion, as long as the total amount of the material removed from the surface does not exceed 10% of the original pipe wall thickness. Do not scrape more than two times under any circumstances.

G. Using and indelible, greaseless marker, mark both pipe sections exactly one-half the coupling length. Open one end of the couplings protective packaging and slide the coupling over the pipe end which has been scraped the full coupling length until the pipe end is flush with the opposite side of the coupling.

1. Leave plastic bag over coupler to prevent contamination and debris from entering the open end.

2. If center stops are present, pop or press the coupling fully onto the pipe with a quick motion in order to knock the stops out or fold them over inside the fitting.

3. Be careful not to slide the coupling past the scraped portion of the pipe.

H. Position second pipe end so that it is against the first and a maximum gap of 1/8-inch exists between pipes and slide electrofusion coupling onto second pipe to one half the length of the coupling.

I. At the expense of the Contractor a fusion control box which can scan the barcode provided on the electrofusion coupling shall be used to ensure proper installation.

1. Contractor shall observe the manufacturer’s procedure for pre-heating or temperature specific fusion times.

2. Do not leave the fusion process unattended.

3. If multiple barcodes corresponding to ambient temperature or a separate pre-heat barcode are present, consult manufacturer’s recommend procedure for scanning the proper barcode.

J. Fusion Cycle:

1. Verify that fusion cycle is complete. Check melt indicators if equipped.

2. After fusion cycle is complete, not the cooling time and mark the time when the clamping time has elapsed on the pipe.

3. For couplers with dual fusion zones, repeat fusion cycle for both ends of coupler.

K. Do not allow any individual to install electrofusion couplings unless they are adequately trained and certified in the technique involved. Contractor is to submit evidence of installer's experience installing electrofusion coupling on at least three previous projects.

3.07 INSTALLATION

A. High Density Polyethylene (HDPE) Pipe shall be installed in accordance with the manufacturer's instructions, as shown on the Plans and as specified herein. A certified joining technician shall perform all heat fusion joints.

B. Care shall be taken in loading, transporting and unloading to prevent damage to the pipe. Pipe or fittings shall not be dropped. All pipe and fittings shall be examined before installation and no pieces shall be installed if found to be defective. Any damage to the pipe shall be repaired as directed by the Engineer. If any defective pipe is discovered after it has been installed, it shall be removed and replaced with a sound pipe in a satisfactory manner by the Contractor at his own expense.

C. Care shall be taken during transportation of the pipe such that it will not be cut, kinked, or otherwise damaged.

D. Ropes, fabric or rubber protected slings and straps shall be used when handling pipes. Chains, cables or hooks inserted into the pipe ends shall not be used. Two slings spread apart shall be used for lifting each length of pipe.

E. Pipes shall be stored on level ground, preferably turf or sand, free of sharp objects, which could damage the pipe. Stacking of the polyethylene pipe shall be limited to a height that will not cause excessive deformation of the bottom layers of pipes under anticipated temperature conditions. Where necessary due to ground conditions, the pipe shall be stored on wooden sleepers, spaced suitably and of such width as not to allow deformation of the pipe at the point of contact with the sleeper or between supports.

F. Pipe shall be stored on clean level ground to prevent undue scratching or gouging. The handling of the pipe shall be in such a manner that the pipe is not damaged by dragging it over sharp and cutting objects. The maximum allowable depth of cuts, scratches or gouges on the exterior of the pipe is 5 percent of wall thickness. The interior pipe surface shall be free of cuts, gouges or scratches.

G. Pipe shall be laid to lines and grade shown on the Drawings.

H. When laying is not in progress, including lunchtime, the open ends of the pipe shall be closed by fabricated plugs, or by other approved means.

I. Sections of pipe with cuts, scratches or gouges exceeding 5 percent of the pipe wall thickness shall be removed completely and the ends of the pipeline rejoined at the expense of the Contractor.

J. The pipe shall be joined by the method of thermal butt fusion, as outlined in PART 3 – Execution, Section 3.2 Joining Method. All joints shall be made in strict compliance with the manufacturer's recommendations.

K. Mechanical connections of the polyethylene pipe to auxiliary equipment such as valves,

pumps and tanks shall be through flanged connections which shall consists of the following:

1. A polyethylene flange shall be thermally butt-fused to the stub end of the pipe.

2. A 316 stainless steel back up ring shall mate with a 316 stainless steel flange.

3. 316 stainless steel bolts and nuts shall be used.

L. Flange connections shall be provided with a full-face neoprene gasket.

M. If a defective pipe is discovered after it has been installed, it shall be removed and replaced with a sound pipe in a satisfactory manner at no additional cost to the Owner. All pipe and fittings shall be thoroughly cleaned before installation, shall be kept clean until they are used in the work and when laid, shall conform to the lines and grades required.

3.08 HYDRANTS

A. Fire hydrants shall be America Darling B-62-B or approved equal and shall conform to AWWA Specification C-502-94, “Dry Barrel Fire Hydrants.” All connections shall be mechanical joint unless otherwise approved by Owner’s Representative.

B. All “single pumper” hydrants shall have two, two and one-half inch hose connections and one four and one-half inch pumper connection. All “double pumper” hydrants shall have one two and one-half inch hose connection and two four and one-half inch pumper connections. All hose threads shall be National Standard threads. The working parts of all fire hydrants shall be bronze or non-corrodible metal.

C. Painting and coating shall be in accordance with the cited AWWA Specifications for dry barrel fire hydrant Section 4, Article 4.2(Paint). Color of paint shall be red.

D. The adjustment of hydrant barrel and valve box to the required finish grade wil be at the expense of the Contractor.

E. All hydrants shall have drain outlets at the base of the barrel. Plugs shall be removed prior to installation.

3.09 FLUSHING

A. The Contractor shall submit his plan for flushing to the Engineer for review and approval at least 10 days before starting flushing.

B. The Contractor shall notify the Engineer a minimum of 48 hours before actually beginning the field flushing.

C. A representative of the Owner and Contractor shall be present for all flushing and testing.

1. Before the pressure or leakage tests are performed and before the system is sterilized, all newly laid mains shall be thoroughly flushed to remove all foreign materials. The Contractor shall provide for "open bore" flushing at each end of the system so that all parts will be cleaned. Flushing times shall be at the discretion of the Owner and utility. The Contractor will use the method in AWWA C651-14 “Disinfecting Water Mains”.

2. In the event repeated flushing is necessary to approve and certify the system, such flushing

shall be done at the expense of the Contractor.

3.10 TESTING

A. Pressure testing shall be conducted per Manufacturer's recommendations and as approved by the Engineer.

B. The Contractor shall submit his plan for testing to the Engineer for review and approval at least 10 days before starting testing.

C. The Contractor shall notify the Engineer a minimum of 48 hours before actually beginning field testing.

D. All HDPE mains shall be field-tested. Contractor shall supply all labor, equipment, material, gages, pumps, meters, and incidentals required for testing.

E. All mains (existing and new) shall be tested to 120 psi unless otherwise approved by the Engineer.

1. Should a leak be found in a section of existing piping that was not modified during Contractor's operations, coordinate with Engineer to determine method for repairing the damaged piping. Owner will pay for cost of repairs.

2. Should a leak be found in a section of new piping or at a new joint in a section of existing piping the damaged piping shall be repaired at the Contractor's expense.

F. Pressure testing procedure shall be as follows:

1. Restrain pipeline against movement in event of catastrophic failure. Leave joints exposed for leakage examination.

2. Isolate section of piping to be tested.

3. Fill line slowly with water. Maintain flow velocity less than 2 feet per second.

4. Expel air completely from the line during filling and again before applying test pressure. Air should be expelled by air release valves.

5. Pressurize pipeline to test pressure and add make-up test water as required to maintain maximum test pressure of 120 psi for four hours.

6. After four hour expansion phase, reduce pressure by 10 psi to target test pressure of 110 psi.

7. The final test pressure shall be within 5% of the target pressure at the end of one hour. .

8. Upon completion of the test, the pressure shall be bled off from a location other than the point where the pressure is monitored. The pressure drop shall be witnessed by the Engineer at the point where the pressure is being monitored.

G. If the final test pressure is within 5% of the target test pressure at the end of the test period and there are no visual leaks the installed pipe shall be considered to have passed.

H. All visible leaks are to be repaired regardless of the amount of leakage.

3.11 DISINFECTION

A. The Contractor shall submit his plan for disinfection to the Engineer for review and approval at least 10 days before starting disinfection.

B. The Contractor shall notify the Engineer a minimum of 48 hours before actually beginning the disinfection.

C. General

1. After pressure and leakage tests and before being placed into service, all newly laid water mains shall be thoroughly disinfected by the Contractor. The Contractor will use the method in AWWA C651-14 "Disinfecting Water Mains" and it includes disinfection, flushing and sampling procedures that must be completed before the water mains are placed into service.

D. Method of Disinfection

1. Chlorine shall be supplied by Contractor for sterilization. Chlorine may be applied by any of the following methods,

   a) Liquid chlorine gas-water mixture,

   b) Direct chlorine gas feed or

   c) Calcium hypochlorite and water mixture.

2. The chlorinating agent shall be applied at the beginning of the section adjacent to the feeder connection and shall be injected through a corporation cock, hydrant or other connection ensuring treatment to the entire line. Water shall be fed slowly into the new line with chlorine applied in amounts to produce a dosage of 40 ppm to 50 ppm through the entire extent of the new system. The disinfecting agent shall be allowed to stand in the mains for at least 24 hours.

3. A residual of not less than 5 ppm chlorine shall remain in all parts of the line after 24 hours of detention time. During the chlorination process, all intermediate valves and accessories shall be operated. Valves shall be manipulated so that the strong chlorine solution in the line being treated will not flow back into the line supplying the water. After chlorination, all water with a higher chlorine content than that at the permanent source of supply shall be thoroughly flushed from all parts of the new system. Contractors disinfection plan shall also include details of how Contractor will dispose of chlorinated water in a permittable manner.

3.12 EXISTING UTILITIES

A. Contractor is responsible for the protection of all existing underground, surface and overhead utilities, and for the protection of adjacent structures. Plan locations of existing underground facilities are to be considered approximate only and shall be verified with the owning utility by the Contractor. The methods used to protect existing utilities, appurtenances, structures, etc. shall be subject to the approval of the Owner. Any damage to existing utilities should result in a stop-work and immediate repair completed to the satisfaction of the Owner and the

Utility, at the expense of the Contractor.

3.13 AS-BUILTS

B. Contractor shall provide staking notes and a redlined drawing prior to final payment showing as- built information on the following:

1. Horizontal location and elevation at least every 50 feet along the pipe and of all tees, bends, changes in grade, and end of the dead-end runs.

2. Horizontal location for all valves and change in pipe size or class. In addition to stationing, location of valves shall also be shown by three swing ties from each valve to appropriate prominent features. Swing ties shall not exceed 100 feet in length without the written consent of the Owner's Representative.

3. Horizontal and vertical location of electrofusion couplings, air releases, repairs to leaks during testing or damaged section of pipe, and hydrants.

4. Horizontal and vertical location of any other utilities intercepted in a trench.

5. Type and depth of bedding used, if any.

6. Accurate detail and location of any unique tie-ins, special combination of fittings, etc.

7. On service pit orifices, show station on mainline for corporation stop, length and size of service line, location of pit orifices by two and more swing ties and station and offset to terminus. Swing ties to be as close to 90 degrees to one another as possible and shall not exceed 100 feet in length. Swing Ties will be made to prominent permanent features such as building corners.

8. If adequate as-built data is not provided as defined above, the Owner may perform an as-built survey and deduct the cost from monies due the Contractor.

3.14 PROTECTION OF FINISHED WORK

A. Section 01 70 00 - Execution and Closeout Requirements: Requirements for protecting finished Work.

B. Protect pipe from damage or displacement until Final completion of the project.

END OF SECTION 33 07 01

SECTION 33 07 03
GUIDED PILOT TUBE AUGER JACK & BORING FOR 24-INCH DIAMETER CASING INSTALLATION UNDER CHIEF EDDIE HOFFMAN HWY

PART 1 - GENERAL

1.01 WORK DESCRIPTION

A. This specification covers the installation of of 24-inch diameter steel casing pipe under the Chief Eddie Hoffman Highway in Bethel, AK. The installation will be accomplished using guided pilot tube jacking and boring technologies.

B. The equipment to be utilized shall be BohrTec BM400 4S or approved equal, with a minimum thrust capacity of 150 tons, as described herein. The method of guidance shall be by electronic theodolite with camera and electronic (LED) target inside a 5-inch diameter pilot tube that can continuously monitor line and grade to insure accuracy is maintained within the tolerances specified by the equipment manufacturer. Pipe insertion methods using pilot tube jacking and boring equipment shall be employed to directly install the new casing in a three phase operation ([1]- 5-inch diameter pilot tube, [2]-16-inch diameter sacrificial casings with augers, [3] – 24-inch diameter steel product pipe), at the location indicated on the Appendix drawing.

C. The work specified includes requirements for excavation and support of excavations for jacking and receiving pits. The Contractor shall design, furnish, install, and maintain a system of trench supports, including all bracing and associated items, to retain excavations in a safe manner and to control ground movements. Upon completion of the pilot tube jack and boring operation, all shoring and installation equipment shall be removed and the jacking and receiving pits and construction staging areas restored to original condition as defined the Owner’s Representative.

D. The work shall include installation of safety fencing and signing; design and construction of pit excavations and excavation support systems; material disposal; control and disposal of surface water, groundwater, and construction water; and site restoration.

E. The Contractor shall have sole responsibility for sizing the excavations required for jacking and receiving pits, within the work area limits delineated on the Drawings or shown otherwise. The size of the excavations shall provide adequate space for the Contractor's selected methods of construction.

F. The Geotechnical Report refers to the report titled Chief Eddie Hoffman Rehabilitation and Separated Pathway Project Number 53927 prepared by AKDOT in January 2005, that shows typical soils near the project area. The report is appended to this bid package in Attachment C.

1.02 AUGER JACK AND BORE GENERAL SPECIFICATIONS

A. The depths and locations of starting and receiving pits shall be established by the Contractor in accordance with the horizontal alignment and grade as shown on the project construction plans. Pits are expected to be less than 5 ft deep.

B. All work performed under this contract shall be done in accordance with applicable City of Bethel safety procedures and State of Alaska and federal Occupational Safety And Hygiene (OSHA) safety standards. Barricades and signage shall be furnished around working pits to safeguard traffic and pedestrians.

C. All discharge from dewatering of the working pits shall be directed into approved receiving catch basins in accordance with all applicable regulatory requirements.

D. The working pits shall be in locations that in no way interfere with the operation of the highway, streets, driveways, railroads or other public or private facilities. Working pits shall not weaken or damage any embankment, utility or structure. The Resident Project Representative will prior to construction shall approve access pit locations.

E. The use of water or other fluids in connection with the boring operation will be permitted only to the extent of lubrication for the cuttings. Water jetting will not be permitted.

1.03 SUBMITTALS

F. Contractor shall submit a detailed installation plan for installation of crossing. Installation plan shall be reviewed and approved by Engineer and Alaska Department of Transportation one month prior to installation.

1.04 PERMITS

A. All work within the State highway right-of-way shall conform to the specifications and requirements of the Alaska Department of Transportation. All work within City of Bethel right-of-way shall conform to the specifications and requirements of the City of Bethel Public Works Department. The Contractor shall keep a copy of all required permits at the job site and comply with all the terms and conditions of said permits.

1.05 FITTINGS STORAGE AND HANDLING

A. Casing pipe shall be properly stored and handled to prevent damage in accordance with the manufacturer's recommendations and as approved by the Owner's Representative. Damage is described as, but is not limited to, abrasion, flattening, deformation and dents, especially to the machined ends. Thorough inspection of the casing pipe materials shall be performed prior to installation.

PART 2 - PRODUCTS

2.01 MATERIALS

A. 24-inch diameter x ½-inch wall ASTM A-36 steel pipe shall be used for the casing. Pipe will be delivered to the project site in 10-foot long segments fitted with Permaloc joints for rapid assembly.

PART 3 - EXECUTION OF WORK

3.01 CONSTRUCTION

A. It is expected that the jacking and receiving pits will be less than 5 ft deep to accommodate all of installation equipment.

B. A thrusting surface shall be installed inside the jacking pit perpendicular to the proposed pipe alignment and shall be designed to withstand the maximum jacking pressure to be used (150,000 lbs), with a factor of safety of at least 2.0, without excessive deflection or displacement. The thrusting surface may consist of a concrete block, backfilled and compacted sheet piles, inter-connected Jersey barriers or any combination suitable for purposes of the project.

C. A theodolite shall be set up to guide the 5-inch diameter pilot string along the desired grade line and alignment. This shall be accomplished by training a laser beam on an LED target within the drill head and adjusting angle of penetration of the drill head to maintain the beam on the target.

This will insure that the pilot string will follow a precise and straight path inside of a tight pilot tube tunnel.

D. A string of 16-inch diameter steel barrels each containing an auger shall then be jacked into the borehole, displacing the drill string forward and augering out spoils from inside the barrels back to the starting pit. The 16-inch diameter barrels shall be installed as the drill string is disassembled at the receiving pit. The 16-inch diameter pipe string shall create a tight and precise tunnel centered on the pilot hole string.

E. The final 24-inch diameter pipe casing shall be fitted with an auger head and jacked against the 16-inch diameter sacrificial string, which in turn shall be removed in sections as it exits the end pit. The product pipe shall follow a path that is concentric with the 16-inch diameter barrel. Spoils shall be augered forward to the receiving pit during pipe installation and removed via a container inside the receiving pit.

F. Excavated material shall be disposed per Owner's Representative's directions.

G. The casing pipe sections shall be purchased with matching male/female Permaloc friction joints for fast and weld-free installation (pipe ends do not need to be welded when using Permaloc joints.)

H. If the annulus between the casing pipe and the borehole is 2 inches or greater, the annulus shall be completely filled by pressure grouting the entire length of installation using cementitious grout. The wetting of said annulus with water is required prior to performing the pressure grout operation.

I. The Contractor shall clean the interior of the casing pipe and remove all excess excavated material.

J. After the completion of the borehole and the casing pipe installation, the Contractor shall check the two ends of the casing pipe that are located within the bore and receiving pits for horizontal alignment and grade in accordance with Section 3.02 of this specification. The results of the horizontal alignment and grade checks shall be presented to the Owner's Representative for review and approval.

3.02 TOLERANCES

A. The finished casing pipe shall be straight (end to end) and installed to a horizontal alignment and grade as shown on Appendix Dwg 1. By the very nature of the installation technology, the theodolite-guided pilot tube is expected to produce the desired precise alignment for the final casing to follow. There is always a possibility of hitting unexpected obstructions along the pathway. Such conditions will be addressed as provided in Section 3.03 of this document.

3.03 REJECTION OF BOREHOLE/CASING PIPE

A. The location indicated for the casing installation and shown on the Appendix Dwgs was selected based on area soil boring information obtained in a 2005 study by AKDOT along Chief Eddie Hoffman Hwy and general knowledge of soils in the City of Bethel, AK. The 5-inch guided pilot drill head, once installed along the desired casing pathway, will offer a high probability that there are no obstructions that would prevent installation of a 24-inch diameter casing. The pilot drill portion of the work can be repeated easily along a parallel path if obstructions are encountered during the first attempt. The Contractor will evaluate penetration conditions as they occur and recommend for approval remedies, as necessary, to the Owner's Representative. Remedies for unexpected change of conditions will be negotiated between the Contractor and the Owner's Representative.

3.04 WORK BY OTHERS

A. After completion of the casing pipe installation, the casing pipe shall be sliplined with an 8” x 20” HDPE water main, sealed at both ends in accordance with the details and the access pits shall be backfilled. The Contractor shall restore the surface and profile of the right-of-way to its original condition.

END OF SPECIFICATION 33 07 03

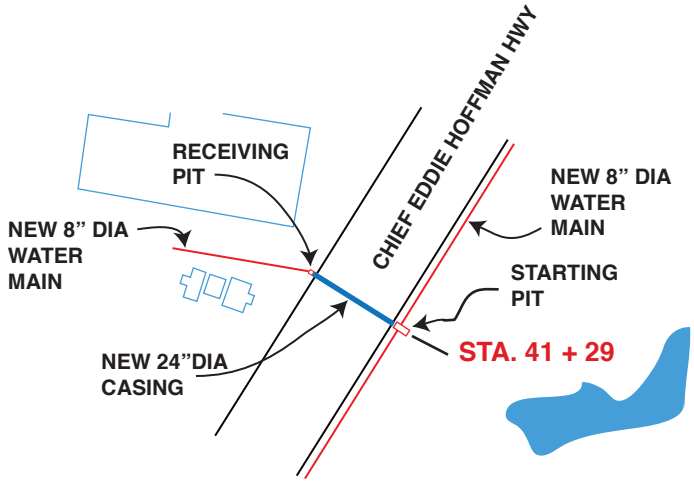

C09 - PREFERRED CROSSING (100')

NO SCALE

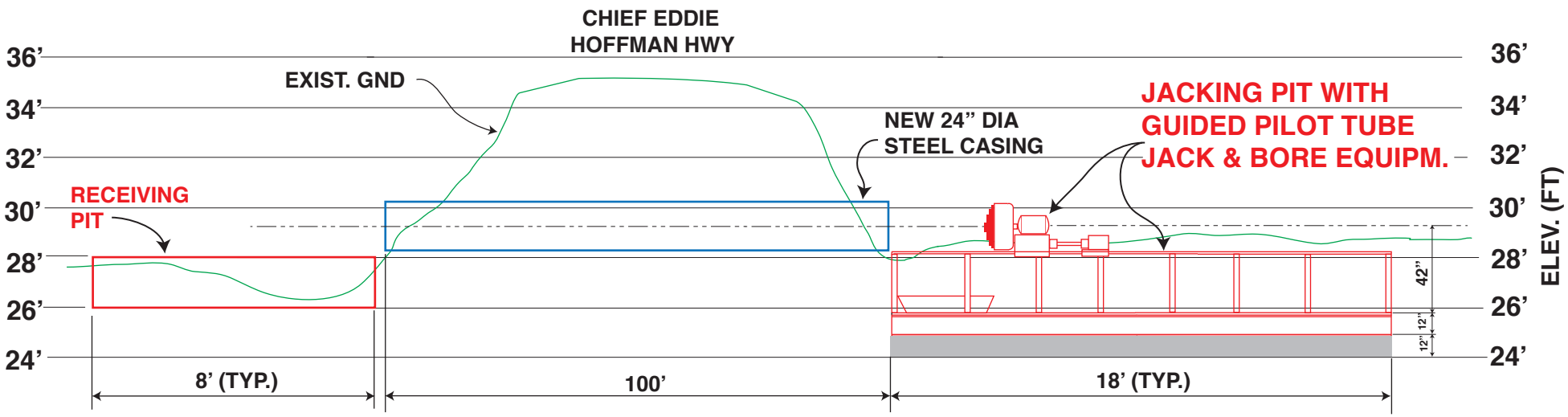

PROFILE - TYPICAL GPT JACK & BORE INSTALLATION

NO SCALE

18 OCT 16

ALASKA DEPT OF TRANSPORTATION BETHEL, AK	
24" DIA CASING UNDER EDDIE HOFFMAN HWY	
MILL CREEK MANAGEMENT TECHNOLOGIES, INC.	DWG 1

SECTION 33 10 01
STEEL PIPING, FITTINGS, AND VALVES

PART 1 - GENERAL

1.01 SUMMARY

A. This section covers steel piping, fittings, and valves used inside the treatment plant building in potable water and glycol service. In order to match existing piping systems and provide the Contractor with ease and flexibility of installation, Victaulic brand items have been specified throughout for potable water service. Equivalent items will be considered with Engineers approval.

B. All piping and fittings used in potable water service shall be designed for an operating pressure of 85 psig and a minimum design pressure of 125 psig at 75 °F. Victaulic grooved pipe in schedule 10 or 40 with Victaulic fittings are pre-approved for this service.

C. All piping and fittings used in glycol service shall be designed for an operating pressure of 120 psig and a minimum design pressure of 150 psig at 130 °F. Threaded schedule 40 black iron pipe or schedule 40 Victaulic grooved pipe is pre-approved for this service.

1.02 SECTION INCLUDES

1. General
2. Materials
   a. Pipe
   b. Victaulic Couplings
   c. Fittings
   d. Valves
   e. Victaulic Specialties
   f. Victaulic Tooling
3. Execution

1.03 REFERENCES

A. The following specifications are referenced in this document and shall be considered integral to this specification:

1. American Society for Testing Materials (ASTM)
   a. ASTM A-53 – Pipe, Steel, Black and Hot-Dipped Zinc Coated, Welded and Seamless.
   b. ASTM A-183 – Carbon Steel Track Bolts and Nuts
   c. ASTM A-234 – Standard Specification For Piping Fittings or Wrought Carbon Steel and Alloy Steel.
   d. ASTM A-449 – Quenched and Tempered Steel Bolts and Studs

e. ASTM A-536 – Ductile Iron Castings

f. ASTM F-1476 - Standard Specification for Performance of Gasketed Mechanical Couplings for Use in Piping Applications

2. American Society of Mechanical Engineers (ASME)

a. ASME B16.9 – Factory Made Wrought Butt Welded Fittings

b. ASME B31.1 – Chemical Plant and Petroleum Refining Piping

c. ASME B31.9 – Building Services Piping

3. American Water Works Association (AWWA)

a. AWWA C-606 – Grooved and Shouldered Joints

4. American National Standards Institute (ANSI)

a. ANSI / NSF 61 – Drinking Water System Components

1.04 SUBMITTALS

A. Victaulic products shall be shown in product submittals and shall be specifically identified with the applicable Victaulic style or series number.

B. Submittals indicating conformance with ANSI/NSF 61 are required for all parts having direct contact with potable water.

1.05 QUALITY ASSURANCE

A. To assure uniformity and compatibility of piping components in grooved end piping systems, all grooved products utilized shall be supplied by Victaulic or engineering approved equal. Grooving tools shall be supplied by the same manufacturer as the grooved components.

PART 2 - PRODUCTS

2.01 MATERIALS

A. Pipe

1. Grooved: Carbon Steel, A-53B/A-106B - Roll or cut grooved-ends as appropriate to pipe material, wall thickness, pressures, size and method of joining. Pipe ends to be grooved in accordance with Victaulic current listed standards conforming to ANSI/AWWA C-606.

2. Threaded Black Iron: Schedule 40, A53 Grade B black steel.

a. Pipe fittings, unions, nipples, and couplings: Malleable iron, cast iron, or steel with pressure rating to suit application.

b. Unions: Provide ground joint unions on piping 2 inches and smaller and gasketed, flanged joint unions on piping 2-1/2 inches and larger. Provide gaskets compatible with fluid carried.

c. Welded fittings and flanges: Fabricated from the same material as the pipe.

d. Sleeve couplings:

1) Gasketed sleeve type consisting of one steel middle ring, two steel followers, two gaskets, and the necessary steel bolts and nuts to compress the gasket. Dresser or equal.

2) Gasket material as recommended by the manufacturer for fluid carried.

3) Pressure rating not less than adjoining pipeline.

4) Constructed to permit pipe expansion, contraction, and angular deflection.

5) Pipe joint lubricant: Anti-seize Teflon tape or liquid Teflon thread lubricant, unless otherwise indicated.

B. Victaulic Mechanical Couplings for Joining Carbon Steel Pipe

1. Victaulic Standard Mechanical Couplings, 2 inch (DN50) through 12 inch (DN300): Manufactured in two segments of cast ductile iron, conforming to ASTM A-536, Grade 65-45-12. Gaskets shall be pressure-responsive synthetic rubber, grade to suit the intended service, conforming to ASTM D-2000. (Gaskets used for potable water applications shall be UL classified in accordance with ANSI/NSF-61 for potable water service.) Mechanical Coupling bolts shall be zinc plated (ASTM B-633) heat treated carbon steel track head conforming to ASTM A-449 and ASTM A-183, minimum tensile strength 110,000 psi (758450 kPa) as provided standard Victaulic.

a. Rigid Type: Coupling housings with offsetting, angle-pattern bolt pads shall be used to provide system rigidity and support and hanging in accordance with ANSI B31.1, B31.9, and NFPA 13.

1) 2” (DN50) through 8” (DN200): Victaulic Style 107H (Quick-Vic™). Installation ready rigid coupling for direct stab installation without field disassembly. Gasket shall be Grade “EHP” EPDM compound with red color code designed for operating temperatures from -30 deg F (-34 deg C) to +250 deg F (+120 deg C).

2) 10” (DN250) through 12” (DN300): Victaulic Style 07 (Zero-Flex®). Standard rigid coupling. Gasket shall be Grade “E” EPDM compound with green color code designed for operating temperatures from -30 deg F (-34 deg C) to +230 deg F (+110 deg C).

b. Flexible Type: Use in locations where vibration attenuation and stress relief are required. Flexible couplings may be used in lieu of flexible connectors at equipment connections. Three couplings, for each connector, shall be placed in close proximity to the vibration source.

1) 2” (DN50) through 8” (DN0200): Victaulic Style 177 (Quick-Vic™). Installation ready flexible coupling for direct stab installation without field disassembly. Gasket shall be Grade “EHP” EPDM compound with red color code designed for operating temperatures from -30 deg F (-34 deg C) to +250 deg F (+120 deg C).

2) 10” (DN250) through 12” (DN300): Victaulic Style 75 or 77 standard flexible couplings. Gasket shall be Grade “E” EPDM compound with green color code designed for operating temperatures from -30 deg F (-34 deg C) to +230 deg F (+110 deg C).

2. Flange Adapters: For use with grooved end pipe and fittings. For direct connection to flat faced ANSI Class 125 / 150 flanges, use Victaulic Style 741. For direct connection to raised

face ANSI Class 300 flanges use Victaulic Style 743. See Victaulic Publication 06.06 for selection of gaskets and other parts needed for complete installation of flange adapters. Follow installation instructions provided in this publication.

3. Grooved couplings shall meet the requirements of ASTM F-1476.

4. Gasket: Synthetic rubber conforming to steel pipe outside diameter and coupling housing, manufactured of elastomers as designated in ASTM D-2000.

   a. Reference shall always be made to the latest published Selection Guide for Victaulic Gaskets for proper gasket selection for the intended service.

C. Victaulic Grooved End Fittings:

1. Standard fittings shall be cast of ductile iron conforming to ASTM A-536, Grade 65-45-12, forged steel conforming to ASTM A-234, Grade WPB 0.375" wall (9,53 mm wall), or fabricated from Std. Wt. Carbon Steel pipe conforming to ASTM A-53, Type F, E or S, Grade B. Fittings provided with an alkyd enamel finish or hot dip galvanized to ASTM A-153. Zinc electroplated fittings and couplings conform to ASTM B633.

2. AGS Fittings shall be supplied with factory AGS grooved ends, for use with Victaulic W07 or W77 couplings and W741 flange adapter. Fittings shall be manufactured of ductile iron conforming to ASTM A-536, forged carbon steel conforming to ASTM A-234, or factory fabricated from carbon steel pipe conforming to ASTM A-53. Fittings shall be manufactured to the dimensional standards ASME B16.9. Orange enamel coated or galvanized.

3. Victaulic Hole-Cut Branch Outlets:

   a. Bolted Branch Outlet: Branch reductions on 2"(DN50) through 8"(DN200) header piping. Bolted branch outlets shall be manufactured from ductile iron conforming to ASTM A-536, Grade 65-45-12, with synthetic rubber gasket, and heat treated carbon steel zinc plated bolts and nuts conforming to physical properties of ASTM A-183. Victaulic Style 920 / 920N.

   b. Strapless Outlet: 1/2"(DN15) or 3/4"(DN20) NPT outlet on 4" (DN100) and larger header sizes rated for 300 PSI (2065 kPa). Victaulic Style 923.

   c. Strapless Thermometer Outlet: To accommodate industrial glass bulb thermometers with standard 1-1/4"-18 NEF 2B extra fine thread and 6" (152mm) nominal bulb length on 4" (DN100) and larger header sizes rated for 300 PSI (2065 kPa).

D. Victaulic Grooved End Valves

1. Butterfly Valves

   a. 2"(DN50) through 12"(DN300) Sizes: 300 psi CWP (2065 kPa) suitable for bidirectional and dead-end service at full rated pressure. Body shall be grooved end black enamel coated ductile iron conforming to ASTM A536. Disc shall be electroless nickel plated ductile iron with blowout proof 416 stainless steel stem. Disc shall be offset from the stem centerline to allow full 360 degree seating. Seat shall be pressure responsive EPDM. Valve bearings shall be TFE lined fiberglass, and stem seals shall be of the same grade elastomer as the valve seat. Valve shall be complete with ISO flange for actuation mounting. Valve operators shall be lever handle or gear operator, available with memory stop feature, locking device, chainwheel, or supplied bare. (Valve with EPDM seat is UL classified in accordance with ANSI/NSF-61.) Victaulic Vic®-300 MasterSeal™.

2. Check Valves:

   a. 2"(DN50) through 3"(DN80) Sizes Spring Assisted: Black enamel coated ductile iron body, ASTM A-536, Grade 65-45-12, stainless steel non-slam tilting disc, stainless steel spring and brass shaft, nickel-plated seat surface, 365 psi (2517 kPa). Victaulic Series 716H.

   b. 4”(DN100) through 12”(DN300) Sizes Spring Assisted: Black enamel coated ductile iron body, ASTM A-536, Grade 65-45-12, elastomer encapsulated ductile iron disc suitable for intended service, stainless steel spring and shaft, welded-in nickel seat, 300 psi (2065 kPa). Victaulic Series 716.

   c. 2”(DN50) through 4”(DN100) Sizes Horizontal Swing: Horizontal installation, ductile iron body, ASTM A-536, Grade 65-45-12, and Type 316 stainless steel clapper. Synthetic rubber bumper & bonnet seals suitable for intended service, stainless steel wetted parts, 300 psi (2065 kPa). Victaulic Series 712.

   d. 4”(DN100) through 12”(DN300) Sizes Venturi Check: Black enamel coated ductile iron body, ASTM A-536, Grade 65-45-12 with venturi-like taps, elastomer encapsulated ductile iron disc suitable for intended service, stainless steel spring and shaft, welded-in nickel seat, 300 psi (2065 kPa). Victaulic Series 779.

3. Tri-Service Valve Assembly: Combination shut-off, throttling and non-slam check valve.

   a. 2-1/2”(DN65) through 12”(DN300) Sizes: Vic®-300 MasterSeal™ butterfly valve with memory stop feature assembled with Series 716 (2-1/2” & 3”)(DN65 & DN75) or Style 779 Venturi Check (4” – 12”)(DN100-DN300). Series 779 check valve with venturi like taps for flow measurement. Working pressures to 300 psi (2065 kPa).

4. Ball Valves: 1-1/2”(DN40) through 6”(DN150) sizes, ASTM A-536, Grade 65-45-12, ductile iron body, chrome plated carbon steel ball and stem, TFE seats, with Fluoroelastomer seals. 800 psi (5515 kPa). Victaulic Series 726.

5. Plug Valves: 3"(DN75) through 12"(DN300) sizes, with memory stop for throttling, metering or balancing service. Unidirectional bubble-tight shut-off, bi-directional sealing optional. ductile iron body, bonnet, and plug, ASTM A-536, Grade 65-45-12. Plug encapsulated with synthetic rubber suitable for intended service. Welded-in nickel seat, stainless steel self-lubricating bearings. 175 PSI (1200 kPa). AWWA rigid groove dimensions may be adapted to IPS sized system through the use of Victaulic Style 307 transition couplings. Victaulic Series 377 eccentric plug balancing valves.

6. Circuit Balancing Valves:

   a. 2”(DN50) and Smaller Sizes: 300 psi (2065 kPa), y-pattern, globe type with soldered or threaded ends, non-ferrous Ametal® brass copper alloy body, EPDM o-ring seals. 4-turn digital readout handwheel for balancing, hidden memory feature with locking tamper-proof setting, and connections for portable differential meter. Victaulic / TA Hydronics Series 786 or 787 STAD.

      1) Install Series 78U union port fitting and Series 78Y strainer/ball valve combination to complete terminal hookup at coil outlet.

      2) Install Series 793 differential pressure controller to stabilize differential pressure and ensure stable and accurate modulating control. Ametal® brass copper alloy body, bonnet, cone and spindles, threaded ends only.

   b. 2-1/2”(DN65) and Larger Sizes: 300 psi (2065 kPa), y-pattern, globe type with flanged or grooved ends, ASTM A536 ductile iron body, all other metal parts of Ametal®

brass copper alloy, EPDM O-ring seals. 8, 12 or 16-turn digital readout handwheel for balancing, hidden memory feature with locking tamper-proof setting, and connections for portable differential meter. Victaulic / TA Hydronics Series 788 or 789 STAG.

E. Victaulic Grooved End Specialties

1. Expansion Joints:

   a. 2”(DN50) through 6”(DN150) Sizes: Packless, gasketed, type with grooved end telescoping body, suitable for axial end movement to 3”. 350 psi (2410 kPa). Victaulic Style 150 Mover®.

   b. 3/4"(DN20) and Larger Sizes: Expansion joint consisting of a series of grooved end nipples joined with flexible-type couplings. Joint movement and expansion capabilities determined by number of couplings / nipples used in the joint. Victaulic Style 155.

F. Victaulic Tooling:

1. Tools shall be manufactured and supplied by Victaulic. Use roll sets or cut groovers compatible with the pipe material and wall thickness per Victaulic installation instructions (I-100).

2. Common wedge shaped AGS groove for pipe sizes 14” (DN350) through 24”(DN600) requiring one (1) common AGS roll set per tool, for use with approved Victaulic grooving tools. (VE414MC, VE416 FSD, VE424 MC, or VE436.)

G. Valve Actuators:

1. Provide lever or wrench actuators for valves 6 inches and smaller. For larger valves, provide gear driven handwheels.

2. Provide handwheels or actuators for all valves as indicated on the plans or elsewhere in the specifications.

3. Design gear actuators assuming that the differential pressure across the plug or disc is equal to the test pressure of the connecting piping.

4. Gear actuators shall be enclosed, oil lubricated, with seals provided on shafts to prevent entry of dirt and water into the actuator. Gear actuators shall have handwheels. The actuators for valves in exposed service shall contain a dial indicating the position of the valve disc or plug.

5. Traveling nut and worm and gear actuators shall be of the totally enclosed design so proportioned as to permit operation of the valve under full differential pressure rating of the valve with a maximum pull of 80 pounds on the handwheel or crank. Provide stop limiting devices in the actuators in the open and closed positions. Actuators shall be of the self-locking type to prevent the disc or plug from creeping. Design actuator components between the input and the stop-limiting devices to withstand without damage a pull of 200 pounds for handwheel or chainwheel actuators and an input torque of 300 foot-pounds for operating nuts when operating against the stops.

6. Self-locking worm gear shall be a one-piece design of gear bronze material (ASTM B 427), accurately machine cut. The worm shall be hardened alloy steel (ASTM A 322, Grade G31400l; or ASTM A 148, Grade 105-85), with thread ground and polished. Support worm gear shaft at each end by ball or tapered roller bearings. The reduction gearing shall run in a proper lubricant. Worm gear actuators shall be Limitorque Model HBC, EIM Model MG, or equal.

7. Valve actuators, handwheels, or levers shall open by turning counterclockwise.

2.02 VALVE TAGGING AND IDENTIFICATION

A. Provide permanent plastic or metal identifying valve tags.

2.03 BOLTS AND NUTS FOR FLANGED VALVES

A. Bolts and nuts for flanged valve shall be as described in the piping specifications.

2.04 PAINTING AND COATING

A. Coat all piping per Section 33 10 04 and color to match existing piping in the same service. Coat metal valves the same as the adjacent piping. Apply the specified prime coat at the place of manufacture. Apply intermediate and finish coats in field. Finish coat shall match the color of the adjacent piping. Coat handwheels the same as the valves.

2.05 PACKING, O-RINGS, AND GASKETS

A. Unless otherwise stated in the detailed valve specifications, packing, O-rings, and gaskets shall be one of the following non-asbestos materials:

1. Teflon
2. Kevlar aramid fiber
3. Acrylic or aramid fiber bound by nitrile. products: Garlock "Bluegard", Klinger "Klingersil C4400", or equal
4. Buna-N (nitrile)

2.06 FLANGED OR THREADED VALVES

A. Gate Valves

1. Resilient Wedge Gate Valves 3 Inches through 12 Inches

   a. Valves shall comply with AWWA C509 and the following:

      1) The minimum rated working pressure shall be 200 psi. Valves shall have non-rising stems. Valve stems shall be cast integral with stem collar and furnished of cast, forged, or rolled bronze. Stem nuts shall be independent of the wedge and shall be made of solid bronze. Bronze for internal working parts, including stems, shall not contain more than 2% aluminum or more than 7% zinc. Bronze shall conform to ASTM B 62 or ASTM B 584 (Alloy C83600), except the stem bronze shall have a minimum tensile strength of 60,000 psi, a minimum yield strength of 30,000 psi, and a minimum of 10% elongation in 2 inches (ASTM B 584, Alloy C87600). All body bolts shall be 316 stainless steel. Cast iron wedge shall have sealing surfaces of the wedge permanently bonded with resilient material to meet ASTM tests for rubber to metal bond, ASTM D 429.

      2) Provide reduction thrust bearings both above and below the stem collar. Stuffing boxes shall be O-ring seal type with two rings located in stem above thrust collar. Each valve shall have a smooth unobstructed waterway free from any sediment pockets.

      3) Valves in the raw water, feed water, permeate or product water systems shall have 316 stainless steel body and gate.

4) Valve shall be Clow R/W, Mueller, or equal.

B. Butterfly Valves

1. Thrust Bearings for Butterfly Valves

   a. Provide thrust bearings to hold the valve disc in the center of the valve seat.

   b. No bearings shall be mounted inside the valve body within the waterway.

   c. Do not use thrust bearings in which a metal bearing surface on the disc rubs in contact with an opposing metal surface on the inside of the body.

2. Actuator sizing for Butterfly Valves

   a. Actuators shall be sized to produce output torque values as listed in Table 4 of AWWA C504.

3. Port Sizes for Butterfly Valves

   a. For valves 20 inches and smaller, the actual port diameter shall be at least 93.5% of the nominal valve size. For valves larger than 20 inches, the port diameter shall not be more than 1.25 inches smaller than the nominal valve size.

4. Corrosion-Resistant Materials in Butterfly Valves

   a. Where AWWA C504 (Subsections 3.5, 3.6, and 3.7) requires "corrosion resistant" material, such material shall be Type 316 stainless steel.

5. Seating Surfaces in Butterfly Valves

   a. Seating surfaces in valves having motorized actuators shall be stainless steel.

6. Butterfly Valves 4 Inches and Larger

   a. Butterfly valves shall be wafer type, conforming to AWWA C 504.

   b. Minimum working differential pressure across the valve disc shall be 250 psi.

   c. Velocity through open valves will be 10 fps.

   d. Valve shafts shall be Type 316 stainless steel.

   e. Valve shafts shall be stub shaft or one-piece units extending completely through the valve disc.

   f. Materials of construction shall be as follows:

Component	**Material**	**Specification**
Body	Cast iron or ductile iron	ASTM A 48, Class 40; ASTM A 126, Class; or ASTM A 536, Grade 65-45-12
Exposed body, capscrews, bolts, nuts	Stainless steel	ASTM A 276, Type 316
Discs	Stainless steel	ASTM A 276, Type 316
Internal lining, body and disc	Buna-N or Teflon	
Valves shall be Pratt, Garlock, or equal.		

2.07 BALL VALVES

A. Double Union PVC Ball Valves 3 Inches and Smaller

1. Thermoplastic ball valves, 3 inches and smaller, for water and chemical service shall be rated at a pressure of 150 psi at a temperature of 105°F. Body, ball, and stem shall be PVC conforming to ASTM D 1784, Type 1, Grade 1. Seats shall be Teflon. O-ring seals shall be Viton. Valve ends shall be of the double-union design. Ends shall be socket welded except where threaded or flanged-end valves are specifically shown on the plans. Valves shall be as manufactured by Chemtrol, Hayward, R&G Sloan, or equal.

B. Double Union CPVC Ball Valves 3 Inches and Smaller

1. CPVC ball valves, 3 inches and smaller, for water and chemical service shall be rated at a pressure of 150 psi at a temperature of 105°F and rated at a pressure of 100 psi at a temperature of 150°F. Body, ball, and stem shall be CPVC conforming to ASTM D 1784, Type 4, Grade 1. Seats shall be Teflon. O-ring seals shall be Viton. Valve ends shall be of the double-union design. Ends shall be socket welded except where threaded or flanged end valves are specifically shown on the plans. Valves shall have handle for manual operation. Valve shall be as manufactured by Chemtrol, Hayward, R&G Sloan, or equal.

C. Globe and Angle Valves

1. Globe Valves for Concentrate Control

   a. Concentrate Control valves shall be single-port globe-style valves, with cage guiding, balanced valve plug and push-down-to-close plug action. The valve shall be designed to take the full pressure drop from the concentrate pressure down to the disposal system back pressure without the use of supplemental pressure drop orifices. The valve body, plug, cage, disk seat, and retainer, seat ring, and packing flange, studs and nuts shall be 316 stainless steel. Valve seat shall be Teflon. Flanges shall be ANSI Class 300 flat face. Valves shall be Fisher Controls Type ET or equal.

D. Needle Valves 3/4 Inch and Smaller

1. Needle valves shall be all bronze, (ASTM B 61 or B 62) with screwed ends, screwed bonnet, and rising stem. Valves shall have a pressure rating of at least 400 psi at a temperature of 150◦F. Stem shall be bronze: ASTM B 98 (Alloy C65100), ASTM B 584 (Alloy (C87600), or ASTM B 371 (Alloy C69400). Valves shall be Stockham B-64, Crane No. 88, or equal.

E. Check Valves

1. PVC Ball Check Valves

   a. PVC check valves, 3 inches and smaller, shall be constructed of PVC per ASTM D 1784, Type I, Grade 1. Ends shall be double union, socket welded. Seats shall be Viton. Valve shall have a pressure rating of 150 psi at a temperature of 75°F.

2. CPVC Ball Check Valves

   a. CPVC check valves 3 inches and smaller shall be constructed CPVC per ASTM D 1785, Type IV, Grade 1. Ends shall be double union, socket welded. Seats shall be Viton. Valves shall have a pressure rating of 150 psi at a temperature of 75°F.

3. Double-Door Check Valves

a. Double-door check valves shall conform to API 594 and shall be designed to be installed between the flanges of the adjoining pipe. Valves shall be equipped with a spring mechanism to provide for non-slam closure of the valve without backflow, in any position, and shall not be dependent on gravity or backflow for closure. Materials of construction shall be Type 316 stainless steel. Valves shall be Mission Duo-Check II, APCO Series 9000, or equal.

4. Solenoid Valves

a. Solenoid Valves 12 Inches and Smaller

1) Solenoid valves of sizes 3 inch through 12 inches for water and air service shall have forged brass (Alloy C23000) or bronze (ASTM B 62) bodies with Teflon main seats. Internal plunger, core tube, plunger spring, and cage assembly shall be stainless steel (Types 302, 304, or 305). Solenoid enclosures shall be NEMA 4. Valve actuators shall be 120-volt a-c. Seals shall be Teflon. Valves shall be ASCO Skinner-Lancer or equal.

5. Pressure Reducing Valve

a. Provide and install, according to manufacturer's recommendations, one pressure reducing valve to relieve any excessive pressure during pump startup or shutdown. The pressure reducer valve shall be a 2-inch Clayton Model 90-01 or equal.

F. Pipe Hangers & Supports

1. General: The CONTRACTOR shall be responsible for providing hangers and supports for all interior piping. Unless otherwise indicated, all pipe supports shall be standard, commercially accepted pipe supports and accessories. In locations where a standard support cannot be used, the CONTRACTOR shall be responsible for fabricating these supports in accordance with the details provided in the Drawings. Support spacing shall be as indicated on the drawings. Where no spacing is indicated, CONTRACTOR shall provide adequate support to eliminate all sagging in the pipe, to eliminate all dead loads on equipment or tank flanges, and/or movement of the pipe when subjected to the operating flow and pressure of the transported fluid.

2. Adjustable Pipe Stands Floor Supports: Pipe stands shall be ITT Grinnell Figure 259 pipe stands with U-bolt strap with Figure 62 adjustable pipe stanchions, or approved equals. All sharp edges in contact with plastic pipe shall be ground to a minimum radius of 50% of the support plate thickness and be smooth and free of any burrs to minimize potential of pipe gouging over time.

3. Wall Hangers & Supports: For pipes 1" in diameter or less, use Unistrut Corporation J1205N through J1220N, or approved equal. Where larger piping is supported from the wall, a wall support and "U" bolt shall be installed. The wall support shall be Figure 195 or 199 as manufactured by ITT Grinnell, or approved equal.

4. Small diameter pipe supports for attachment of 1" to 3" diameter pipe to walls shall consist of all-purpose metal framing. Metal framing shall be 1-5/8" square and constructed of hot-dipped galvanized steel, as manufactured by Unistrut. Pipe straps shall be Unistrut Series P2558 of the appropriate size, or approved equal. Support spacing shall be as indicated on the Drawings. Where no spacing is indicated, CONTRACTOR shall provide adequate support to eliminate all sagging in the pipe and/or movement of the pipe when subjected to the operating flow and pressure of the transported fluid.

5. Solid Wall, Ceiling or Floor Anchor Bolts: Anchor bolts used to attach structural steel support brackets in solid masonry or concrete ceilings, walls and floors shall have an externally threaded stud with a full length expanding sleeve as manufactured by Hilti, or approved equal. Anchor bolts shall be stainless steel and shall be installed per manufacturer's recommendations. Minimum size and depths of embedment shall be as indicated by the manufacturer for the specific use.

6. Hollow Wall Anchor Bolts: Anchor bolts for attachment of structural steel support brackets in hollow masonry walls shall be sleeve anchor type as manufactured by Hilti, or approved equal. Anchor bolts shall be 3/8" stainless steel and shall be installed according to the manufacturer’s recommendations. Minimum depths of embedment shall be 1½".

7. Corrosion Protection: All new fabricated metal supports shall be painted for corrosion protection with industrial grade epoxy paint as follows:

8. Manufacturers:

   a. Primer for metals:

      1) Sherwin Williams Corothane I Galvapac Two Pack Zinc Primer Gray

      2) Sherwin Williams Zinc clad zinc dust Part F

   b. Paint for Metals:

      1) Sherwin Williams Macropoxy 646 Fast Cure Epoxy Part A Mill White.

      2) Sherwin Williams Macropoxy 646 Fast Cure Epoxy Part B Hardener.

   c. Provide materials that comply with standards indicated for metal pipe supports:

   d. Paint Primer Materials:

      1) Suitable for wet, chemical exposure, interior use.

      2) DFT as recommended by manufacturer.

      3) Meet zinc-rich primer requirements of AWWA D102-03 Standard for Inside System No. 5 and Outside System No. 4 & 6.

      4) Meets the requirements of ASTM D 520 Type III and contains less than .002% lead.

      5) 63% +/- 2.0% solids (mixed)

      6) Dry Film Thickness: 2.5 to 3.5 mils.

      7) Unthinned Volatile Organic Compounds: 2.65 lb/gal

      8) Dry Temperature Resistance: 250° F.

   e. Primer for metals:

      1) Aromatic Urethane, Zinc-Rich

      2) ANSI/NSF 61 certified

      3) AWWA D102 Paint System: ICS-3

   f. Finish Coat for metals:

      1) Polyamidoamine Epoxy.

      2) ANSI/NSF 61 certified

3) AWWA D 102 Inside Systems No. 1 and No. 2.

4) 67 +/- 2.0% solids (mixed)

5) Dry Film Thickness: 4.0 to 6.0 mils

6) Unthinned Volatile Organic Compounds: 2.37 lb/gal.

7) Two Component

8) Dry Temperature Resistance: 250° F.

PART 3 - EXECUTION

3.01 CORE PIPE FUSION

A. Pipe ends shall be clean and free from indentations, projections and roll marks in the area from pipe end to groove for proper gasket sealing.

B. The gasket style and elastomeric material (grade) shall be verified as suitable for the intended service as specified.

C. Install the Victaulic AGS piping system in accordance with the latest Victaulic installation instructions.

D. AGS products shall not be installed with standard grooved end pipe or components. (Installing AGS products in combination with standard grooved end products could result in joint separation and/or leakage.)

E. Use Victaulic grooving tools with AGS roll sets to groove the pipe. Follow Victaulic guidelines for tool selection and operation.

F. Couplings installation shall be complete when visual metal-to-metal contact is reached.

G. See the latest copy of Victaulic's Field Assembly and Installation Instruction Pocket Handbook (I-100).

3.02 TRAINING

A. A Victaulic factory trained representative (direct employee) shall provide on-site training for contractor's field personnel in the use of grooving tools, application of groove, and product installation unless Contractor can demonstrate prior training for all piping installers within 24 months from construction start.

3.03 APPLICATION

A. A Victaulic representative shall visit the job site and review installation at the completion of at least 90% of the pipe fittings. Contractor shall remove and replace any improperly installed products.

B. Victaulic grooved mechanical pipe couplings, fittings, valves and other grooved components may be used as an option to welding, threading or flanged methods.

C. All grooved components shall conform to local code approval and/or as listed by ANSI-B-31.1, B-31.3, B-31.9, ASME, UL/ULC, FM, IAPMO or BOCA.

D. Grooved end product manufacturer to be ISO-9001 certified.

END OF SPECIFICATION 33 10 01

SECTION 33 10 02
PUMPS AND MOTORS

PART 1 - GENERAL

1.01 WORK INCLUDED

A. This section covers pumps and motors used inside the treatment plant building in potable water and glycol service. In order to match existing equipment and provide the Owner ease and flexibility of operations and maintenance, specific brand items have been specified throughout this section; however, equivalent items will be considered with Engineers approval.

1. Vertical in-line multi-stage centrifugal pumps
2. Vertical in-line single stage centrifugal pumps
3. Motors (associated with pumps)

1.02 REFERENCE STANDARDS

A. The work in this section is subject to the requirements of applicable portions of the following standards:

1) Hydraulic Institute
2) ANSI – American National Standards Institute
3) ASTM – American Society for Testing and Materials
4) IEEE - Institute of Electrical and Electronics Engineers
5) NEMA – National Electrical Manufacturers Association
6) NEC – National Electrical Code
7) ISO – International Standards Organization
8) AWWA – American Water Works Association

1.03 TESTING

A. The pump manufacturer shall perform non-witnessed testing (in accordance with ISO9906 annex A) of pumps prior to shipment.

B. The pump manufacturer shall be capable of providing certified testing of pumps prior to shipment.

1.04 WARRANTY

A. The warranty period shall be a non-prorated period of 24 months from date of installation, not to exceed 30 months from date of manufacturer.

PART 2 - PRODUCTS

2.01 VERTICAL IN-LINE MULTI-STAGE CENTRIFUGAL PUMPS

A. The head-capacity curve shall have a steady rise in head from maximum to minimum flow within the preferred operating region. The shut-off head shall be a minimum of 20% higher than the head at the best efficiency point.

B. All pump bearings shall be lubricated by the pumped liquid.

C. Small Vertical In-Line Multi-Stage Pumps (Nominal flow from 3 to 125 gallons per minute) shall have the following features:

1. Each pump shall be designed for in-line installation requiring no more than 1.5 square feet of floor space (including motor). Multiple pump installations shall be skid mounted with a common suction header, common discharge header, inlet and outlet block valves, and outlet check valve. The skid shall include: Suction pressure indication and low suction pressure alarm with interlock to stop motor operation. Suction header water level indicator or switch to ensure flooded suction prior to pump motor start.

   1) Discharge pressure indication and control with high pressure alarm and high pressure shut-down.

2. Control panel with VFD motor controls either integral to the skid or free-standing and suitable for installation in a wet environment.

3. The pump impellers shall be secured directly to the pump shaft by means of a splined shaft arrangement.

4. The suction/discharge base shall have ANSI Class 250 flange or internal pipe thread (NPT) connections as indicated in the drawings or pump schedule.

5. Pump Construction.

Component	Material
Suction/Discharge Base, Pump Head, Motor Stool	Cast iron (Class 30)
Impellers, Diffuser Chambers, Outer Sleeve	304 Stainless Steel
Shaft	316 or 431 Stainless Steel
Impeller Wear Rings	304 Stainless Steel
Shaft Journals and Chamber Bearings	Silicon Carbide
O-rings	EPDM
Shaft couplings for motor flange sizes 184TC and smaller shall be made of cast iron or sintered steel. Shaft couplings for motor flange sizes larger than 184TC shall be made of ductile iron (ASTM 60-40-18).	
Optional materials for the suction/discharge base and pump head shall be cast 316 stainless steel (ASTM CF-8M) resulting in all wetted parts of stainless steel.	

6. The shaft seal shall be a balanced o-ring cartridge type with the following features:

Component	Material
Collar, Drivers, Spring	316 Stainless Steel
Shaft Sleeve, Gland Plate	316 Stainless Steel
Stationary Ring	Silicon Carbide
Rotating Ring	Silicon Carbide
O-rings	EPDM
The Silicon Carbide shall be imbedded with graphite.	

7. Shaft seal replacement shall be possible without removal of any pump components other than the coupling guard, shaft coupling and motor. Pumps with motors equal to or larger than 15 hp (fifteen horsepower) shall have adequate space within the motor stool so that shaft seal replacement is possible without motor removal.

8. All parts in contact with the pumped fluid shall be compatible with potable water containing 0.5 to 2.0 ppm sodium hypochlorite and be ANSI / NSF 61 compliant.

D. Large In-line Vertical Multi-Stage Pumps (Nominal flows from 130 to 500 gallons per minute) shall have the following features:

1. Each pump shall be designed for in-line installation requiring no more than 2.5 square feet of floor space (including motor).

2. The pump impellers shall be secured directly to the smooth pump shaft by means of a split cone and nut design.

3. The suction/discharge base shall have ANSI Class 125 or Class 250 flange connections in a slip ring (rotating flange) design as indicated in the drawings or pump schedule.

4. Pump Construction.

Component	Material
Suction/Discharge Base, Pump Head	Ductile Iron (ASTM 65-45-12)
Shaft Couplings, Flange Rings	Ductile Iron (ASTM 65-45-12)
Shaft	431 Stainless Steel
Motor Stool	Cast Iron (ASTM Class 30)
Impellers, Diffuser Chambers, Outer Sleeve	304 Stainless Steel
Impeller Wear Rings	304 Stainless Steel
Intermediate Bearing Journals	Tungsten Carbide
Intermediate Chamber Bearings	Leadless Tin Bronze
Chamber Bushings	Graphite Filled PTFE
O-rings	EPDM

5. The shaft seal shall be a single balanced metal bellows cartridge with the following construction:

Component	Material
Bellows	904L Stainless Steel
Shaft Sleeve, Gland Plate, Drive Collar	316 Stainless Steel
Stationary Ring	Carbon
Rotating Ring	Tungsten Carbide
O-rings	EPDM

6. Shaft seal replacement shall be possible without removal of any pump components other than the coupling guard, motor couplings, motor and seal cover. Pumps with motors equal to or larger than 15 hp (fifteen horsepower) shall have adequate space within the motor stool so that shaft seal replacement is possible without motor removal.

7. All parts in contact with the pumped fluid shall be compatible with potable water containing 0.5 to 2.0 ppm sodium hypochlorite and be ANSI / NSF 61 compliant.

2.02 VERTICAL IN-LINE SINGLE-STAGE CENTRIFUGAL PUMPS

A. The contractor shall furnish and install as shown in the plans and described in these specifications, a high performance pump designed to deliver the scheduled flow rate at the specified total dynamic head (in feet). Grundfos PACO 50157 LCV is pre-approved for high demand pump service and Grudfos CR 45-2 in a BoosterpaQ™ package is pre-approved for pressure pump service, alternates will be considered with Engineers approval.

B. All parts in contact with the pumped fluid shall be compatible with potable water containing 0.5 to 2.0 ppm sodium hypochlorite and be ANSI / NSF 61 compliant.

C. Noise – Each pump shall be capable of continuous operation without producing noise in excess of the Hydraulic Institute and OSHA guidelines.

D. Casing – Pump casing shall be close grain cast iron fitted with a replaceable lead-free bronze or cast iron case wear ring. Pumps with a specific speed greater than 1600 shall have double-volute casings with suction splitter to reduce radial loading and shaft deflection. All pumps shall be of the back pull-out design so that the rotating element can be removed from the casing without disconnecting the suction or discharge piping.

E. Impeller – Pump impeller shall be of the enclosed type of cast lead-free bronze or iron and shall be statically and dynamically balanced. Impeller diameter shall be trimmed for the specific design conditions.

F. Shaft Sealing – Pump shaft shall be fitted with a leakless mechanical seal lubricated by the pumped fluid suitable for the temperatures and pressures indicated.

G. Motor – Motor shall be of the horsepower and speed shown on the plans. Pumps requiring larger horsepower shall not be acceptable due to severe power load limitations at the site. Pump shall be flexible coupled to a 3 phase, 60 Hertz, 480 volt, vertical, TEFC motor with a 1.15 service factor.

H. Bearing Frame – Pump shall be mounted on a heavy-duty cast-in-one-piece cast iron bearing frame. Shaft shall be of stainless steel. Pump bearings shall be permanently sealed.

I. Base, Coupling and Guard – Pump and motor shall be mounted on a channel steel base, adequately reinforced against deflection including earthquake related forces for the installation site. Pump shall be connected to the drive motor by a flexible coupling capable of withstanding all torsional, radial and axial loads. Coupling and exposed rotating components of the pump and motor shall be protected by an OSHA approved guard.

2.03 MOTORS

A. Motors are to be provided with the following basic features subject to the electrical specification section of this manual. Where discrepancies or conflicts arise, the electrical specifications shall govern.

B. Motors shall be designed for continuous duty operation, TEFC, NEMA T frame with a 1.15 S.F. Motors shall be designed with the understanding that the motor will be installed indoors in a wet environment typical of a water treatment plant.

C. Totally Enclosed Fan Cooled Motors are to be furnished with class “F” insulation.

D. Motor nameplate shall be mounted on enclosure with stainless steel fastening pins. Nameplate shall have, as a minimum, all information as described in NEMA Standard MG 1-20.40.1.

E. Motors over 50 lbs shall having lifting provisions.

F. Motors shall have a NEMA C-Flange for vertical mounting.

G. Drive end bearings shall be adequately sized so that the minimum L10 bearing life is 17,500 hours at the minimum allowable continuous flow rate for the pump.

H. Baldor Super-E™ Premium Efficiency motors are pre-approved and equals will be considered with Engineering approval.

2.04 Controls

A. The pump skid shall include a motor control center and control system capable of providing full pressure control set points for each pump and motor combination. Pumps in skid packages shall rotate operations to provide a balanced run time for each motor and pump.

B. Pressure set-points shall be field adjustable with a target set point for normal operations

provided in the field during start-up.

C. Normal operation for multi-pump skids is to be no more than 3 pumps operating at one time with a 4th pump on stand-by. An emergency low pressure set-point that is field adjustable shall be provided to allow all 4 pumps to run simultaneously.

PART 3 - EXECUTION

3.01 INSTALLATION

A. All pumps and associated motors shall be installed per manufacturers' instructions. All inlet / outlet piping shall be independently supported so as to eliminate loads on the pump flanges.

B. Pump alignment shall be verified after installation, leveling, and grouting of the pump base.

3.02 TRAINING

A. A Grundfos factory trained representative (direct employee) shall provide on-site training for Owner's personnel in the use and maintenance of all pumps. Contractor shall allow for two full days of training at the Owners location after equipment is installed and tested.

END OF SPECIFICATION 33 10 02

SECTION 33 10 03
INSTRUMENTS AND SPECIALTY PIPING SYSTEMS

PART 1 - GENERAL

1.01 SUBMITTALS

A. Product Data: For each type of unit indicated. Submittals shall be in accordance with the General Conditions.

1.02 WARRANTY

A. Provide copies of manufacturer's standard limited warranty for units placed in service.

1.03 MANUALS

A. Provide Owner's Representative with a copy of all manuals for each unit placed in service.

1.04 ELECTRICAL REQUIREMENTS

A. Conform to National Electric Code, State, Local, and NEMA Electrical Standards.

B. Provide properly sized conduit for all wiring in accordance with the National Electric Code and electrical specifications included with this design manual. Provide outlets, junctions, and pull boxes suitable for damp locations. Refer to Electrical Basic Materials and Methods Section 25 05 01.

1.05 FIELD TESTS

A. Tests shall be conducted by the design engineer or a factory trained, qualified representative. All system components shall be checked to verify they have been installed properly and that all terminations have been made correctly and all deficiencies and irregularities shall be corrected.

B. Witnessed Field tests shall be performed on the complete system.

C. Each function shall be demonstrated to the satisfaction of the Owner's Representative.

D. Each test shall be witnessed and signed off by the system supplier and the Owner's Representative upon satisfactory completion.

E. Provide written certification that from the manufacturer to the Owner's Representative that the installation is in accordance with the manufacturer's requirements and the warranty is validated.

PART 2 - PRODUCTS

2.01 MAGNETIC FLOW METERS

A. Magnetic style flow meters shall be provided as indicated on the drawings. Pre-approved model is Rosemount 8700 series with local display and 4-20 mA output. Equals will be considered with Engineering approval.

B. Wetted materials in contact with treated potable water shall be ANSI / NSF-61 certified with PTFE pre-approved for this application.

C. 120 volt single phase electrical power is available to power the meters and transmitters. Transmitters shall be field programmable to provide a 4-20 mA output signal optimized to the flow range.

2.02 PRESSURE GAUGES

A. Local pressure gauges shall be provided as indicated on the piping drawings or piping schematics.

B. Gauges shall be 4 ½" diameter dial, glycerin filled, with stainless steel case.

2.03 TEMPERATURE GAUGES

A. Local temperature gauges shall be provided as indicated on the piping drawings or piping schematics.

B. All temperature gauges and/or switches shall be installed in a thermowell to allow removal of the gauge while pipe is in operation.

PART 3 - EXECUTION

3.01 INSTALLATION

A. Install equipment as per manufacturer's recommendations.

3.02 TESTING AND STARTUP

A. All elements shall be tested to demonstrate a fully functional item and system.

B. Control system supplier shall provide all special testing materials and equipment.

C. Coordinate and schedule all testing and start up work with the Owner's Representative.

3.03 TRAINING

A. Provide a minimum on site 8-hour training to demonstrate operation of all control system components.

B. Instructors shall be thoroughly trained in operating theory as well as practical operation and maintenance work for each component of the system.

END OF SPECIFICATION 33 10 03

SECTION 33 10 04
SPECIAL COATINGS

PART 1 - GENERAL

1.01 SUMMARY

A. The work specified under this section includes furnishing and applying all coating for all equipment, valves, piping, piping accessories, submerged and exposed metal.

1.02 RELATED WORK

A. Section 33 10 01 – Steel Piping, Fittings, and Valves

1.03 GENERAL

A. Extent of special coating work is as herein specified.

B. This work includes application of special coating systems to items and surfaces including surface preparation, priming and topcoats.

1. The work includes application of special coating systems for scheduled surfaces of equipment installed under mechanical and electrical work, except as otherwise indicated.

2. Coat surfaces for special coating systems whether or not colors are designated, except where specifically noted as a surface not to be painted.

3. "Exposed surfaces" is defined to include areas visible when permanent or built-in fixtures are in place in areas scheduled to be coated. Extend special coatings in these areas as required to maintain coating system integrity and provide desired protection.

4. Where items or surfaces are not specifically mentioned, apply special coatings to these the same as adjacent similar materials or areas.

5. All piping, valves and equipment used on this project shall be coated for corrosion protection unless otherwise specified or unnecessary given the type of metal or material.

1.04 SUBMITTALS

A. Product Data: Submit manufacturer's technical information including basic materials analysis and installation instructions for each material specified. List each material and cross-reference to the specific coating and finish system and application. Identify by manufacturer's catalog number and general classification. Submittals shall be in accordance with the General Conditions.

B. NSF Certification: Submit certifications showing ANSI/NSF 61 approval for potable water contact. Note: NSF & UL are certified labs to test potable water coatings to the ANSI/NSF 61 Standard.

C. Samples: Upon request by OWNER or ENGINEER, submit samples for OWNER's construction representative's review of color and texture only. Provide a listing of material and application for each coat of each finish sample.

1.05 QUALITY ASSURANCE

A. Coordination: Provide finish coats which are compatible with and per the same manufacturer as prime paints used. Review other sections of these specifications in which prime paints are to be provided to ensure compatibility of total coating systems for various substrates. Upon request, furnish information on characteristics of specified finish materials, to ensure that compatible prime coats are used. Notify owner's construction representative of any anticipated problems using coating systems as specified.

1.06 DELIVERY AND STORAGE

A. Deliver materials in original, new and unopened packages and containers bearing manufacturer's name and label and following information:

1. Name or title of material
2. Manufacturer's stock number and date of manufacturer
3. Manufacturer's name
4. Contents by volume, for major pigment and vehicle constituents
5. Application instructions
6. Color name and number

B. Take precautions to ensure that workmen and work areas are adequately protected from fire hazards and health hazards resulting from handling, mixing and application of special coatings.

1.07 JOB CONDITION

A. Do not apply coatings when the temperature of surfaces to be painted and the surrounding air temperatures are or are expected to go below temperatures recommended by manufacturer, 45°F (7°C) or less than 5°F above the dew point unless otherwise permitted by coating manufacturer's printed instructions.

B. Do not apply coatings in snow, rain, fog, or mist; or when relative humidity exceeds 85%; or to damp or wet surfaces; unless otherwise permitted by coating manufacturer's printed instructions.

C. Coating work may be continued during inclement weather only if areas and surfaces to be painted are enclosed and heated within temperature and humidity limits specified by coating manufacturer during application and curing period.

PART 2 - PRODUCTS

2.01 MATERIALS QUALITY

A. Provide best quality grade of various types of coatings as regularly manufactured by acceptable coating materials manufacturers. Use only materials displaying manufacturer's identification as a standard, best-Manufacturer's products which comply with coating qualitative requirements of applicable Federal Specifications. Materials that differ in quantitative requirements may be considered for use when acceptable to the ENGINEER. Furnish material data and manufacturer's certificate of performance to ENGINEER for proposed substitutions. All materials specified herein shall be manufactured by TNEMEC Company, Inc., Sherwin Williams (where noted) or Engineer Approved equal are approved for use on this project.

1. Tnemec: Epoxy-Polyamide Potable System, Series N140 Pota-Pox Plus, Series N140 Pota-Pox Plus.

2. Tnemec, or Sherwin Williams: Epoxy-Polyamide Primer, Series N69 Epoxoline II, or Sherwin Williams Macropoxy 646 FC.
3. Tnemec, or Sherwin Williams: High-Build Acrylic Polyurethane, Series 1074, or Sherwin Williams Acrolon 218 HS B65-600 Series..
4. Tnemec, or Sherwin Williams: Polyamide Epoxy-Coal Tar, Tnemec Hi-Build Tneme-Tar 46H-413, or Sherwin Williams Hi-Mil Sher-Tar.

B. Equivalent materials manufactured by other industrial coatings manufacturers may be submitted for approval by the Engineer and Owner. Requests for product approval shall include a list of 5 projects where each product has been used and has provided satisfactory service for at least seven years. No request for approval shall be considered that would decrease film thickness or number of coats or that would offer a change in the generic type of coating specified. In addition, no request for approval shall be considered which does not have certified test reports showing equivalency to the performance criteria of the specified coatings. Any product submitted for approval as a coating for submerged metal must have current ANSI/ National Sanitation Foundation (NSF) Std. 61 approval for contact with potable water.

C. Provide undercoat recommended by manufacturer of finish coat. Use only thinners approved by coating manufacturer, and use only within recommended limits.

D. Colors and Finishes: Paint colors, surface treatments, and finishes, are indicated in the schedule of Section 2.4. If color or finish is not designated, owner's construction representative will select from standard colors available from manufacturer of materials systems as specified.

E. Proprietary names used to designate colors or materials are not intended to imply that products of named manufacturers are required to exclusion of equivalent products of other manufacturers.

F. Color Pigments: Pure, non-fading, applicable types to suit substrates and service indicated, including those approved for potable water for systems applied to objects submerged.

2.02 EQUIPMENT

A. All equipment shall be coated per equipment manufacturer's recommendation for the environment in which the equipment is to be placed, or coated at the factory.

2.03 COATING SYSTEMS

A. Coating systems used on the project shall be as identified below, or approved equals.

B. All Systems: Each coating system shall be applied in accordance with the schedule in Section 2.4. Surface preparation, application, and curing shall be in accordance with manufacturer’s recommendations and application shall be completed by a trained applicator with equipment approved by manufacturer of coating system.

C. Systems A & B: See Section 2.4.

D. Where surface is not provided with other protection, apply two coats of Tnemec coal-tar epoxy 46H-413, or equal. Where additional protection is provided, such as a polyethylene wrap or other system approved by the ENGINEER, apply one coat of Tnemec system, 46H-413 or equal.

2.04 COATING SYSTEM SCHEDULE

ITEM	PREP	COATING	COATS/THICKNESS

***System A:** Submerged Equipment, piping, valves, misc. metals (Excl. Steel Pipe Lining)	SSPC-10-89	Primer: Tnemec SeriesN140 Pota-Pox Plus; Top Coat: Tnemec Series N140 Pota-Pox Plus;	(1)/Primer: 5-6 mils DFT (1)/Top Coat : 5-7 mils
***System B:** B1: Interior & Exposed equipment, piping, valves, misc. metals	SSPC-SP-6	Primer: Tnemec Series N69 Epoxy Polyamide.; Sherwin Williams Macropoxy 646 FC Top Coat(interior): Tnemec Series N69; Sherwin Williams Macropoxy 646 PW-Light Blue	(1)/Primer: 5-6 mils (1)/Top Coat (int): 4-6 mils
B2: Exterior Exposed equipment, piping, valves, misc. metals	SSPC-SP-6	Primer: Tnemec Series N69 Epoxy Polyamide; Sherwin Williams Macropoxy 646 FC. Top Coat (Ext.): Tnemec Series 1075U Endurashield; Sherwin Williams Acrolon 218 HS B65-650 Series – Light Blue	(1)/Primer: 3-5 mils (1)/Top Coat (ext): 3-5 mils

*Cast iron surface preparation as per a SSPC designation is not applicable. Cast iron shall be prepared in accordance with guidelines specified herein. Other metals shall be prepared in accordance with the noted SSPC designation.

2.05 COLOR CODING

A. All visible piping shall match color of adjacent piping so as to blend in with the existing piping. All visible new equipment or tanks shall be tan in color unless painted by the equipment vendor (vendor standard equipment colors are acceptable).

B. Primer should be of distinctly different color than topcoat to facilitate coverage visibility during application and quality control. The contents and direction of flow must be stenciled on the piping in Black.

PART 3 - EXECUTION

3.01 INSPECTION BY CONTRACTOR

A. Starting of coatings work will be construed as Applicator's acceptance of surfaces within any particular area.

B. Do not apply coatings over dirt, rust, scale, grease, moisture, scuffed surfaces, or conditions otherwise detrimental to formation of a durable coating film.

3.02 SURFACE PREPARATION

A. General: Perform preparation and cleaning procedures in compliance with coating manufacturer's instructions for particular substrate conditions, and as herein specified.

B. Remove hardware, hardware accessories, machined surface, plates, lighting fixtures, and similar items which are not to be coated, or provide surface-applied protection prior to surface

preparation and coating operations. Remove, if necessary, for complete coating of items and adjacent surfaces. Following coating completion in each space or area, reinstall removed items, using workman skilled in trades involved.

C. Clean surfaces to be coated before applying coatings or surface treatment; with solvents prior to mechanical cleaning. Program cleaning and application so that dust and other contaminates from the cleaning process will not fall on wet, newly coated surfaces.

D. Ferrous Metal Surfaces: Clean non-galvanized, ferrous surfaces, which have not been shop-coated, of oil, grease, dirt, loose mill scale and other foreign substances by solvent and/or mechanical cleaning, complying with Steel Structures Painting Council (SSPC) recommendations.

1. Touch-up shop applied prime coats which have been damaged or bare areas. Wire-brush, solvent clean, and touch-up with same primer as shop coat.

2. Commercial Blast Cleaning (SSPC-SP6): A Commercial Blast Cleaned surface, when viewed without magnification, shall be free of all visible oil, grease, dirt, dust, mill scale, rust, paint, oxides, corrosion products, and other foreign matter, except for staining as follows: Staining shall be limited to no more than 33 percent of each square inch of surface area and may consist of light shadows, slight streaks, or minor discolorations caused by stains of rust, stains of mill scale, or stains of previously applied paint. Slight residues of rust and paint may also be left in the bottoms of pits if the original surface is pitted.

3. Near White Blast Cleaning (SSPC-10): A Near White Blast Cleaned surface, when viewed without magnification, shall be free of all visible oil, grease, dirt, dust, mill scale, rust, paint, oxides, corrosion products, and other foreign matter, except for staining as follows: Staining shall be limited to no more than 5 percent of each square inch of surface area and may consist of light shadows, slight streaks, or minor discolorations caused by stains of mill scale, or stains of previously applied paint.

4. Cast iron pipe shall be solvent cleaned of any grease, oil or other surface contaminants and then cleaned of the solvent prior to evaporation. Following solvent cleaning, cast iron shall be brush blasted to develop a minimum 1.5 mil surface profile and cleaned of any dust remaining after blasting.

E. Non-Ferrous Metal Surfaces: Clean non-ferrous and galvanized surfaces in accordance with special coating system manufacturer's instructions for type of service, substrate, and application required.

3.03 MATERIALS PREPARATION

A. General: Carefully mix and prepare materials in compliance with manufacturer's directions.

B. Do not mix coating materials produced by different manufacturers, unless otherwise permitted by manufacturer's instructions. Maintain containers used in storage, mixing, and application of paint in a clean condition, free of foreign materials and residue.

C. Stir materials before application to produce a mixture of uniform density, and as required during application. Do not stir film, which may form on surfaces, into material. Remove film and, if necessary, strain material before using.

3.04 APPLICATION

A. General: Apply special coatings by brush, roller, spray, squeegee, or other applicators in accordance with manufacturer's directions – see exceptions. Use applicators best suited for type

of material being applied. Equipment shall be coated at the factory.

B. The number of coats and paint film thickness required is same regardless of the application method. Do not apply succeeding coats until previous coat has cured as recommended by coating manufacturer. Sand between coat applications where required to produce an even smooth surface in accordance with coating manufacturer's directions.

C. Apply additional coats when undercoats or other conditions show through final coat until the cured film is of uniform finish, color and appearance.

D. Coat back sides of access panels, removable or hinged covers to match exposed surfaces.

E. Prime Coats: Before application of finish coats, apply prime coat to material, which is required to be painted or finished, and which has not been prime coated by others.

F. Recoat primed and sealed substrates where there is evidence of suction spots or unsealed areas in first coat, to assure a finish coat with no burn-through or other defects due to insufficient sealing.

G. Recoat or prepare any primed surfaces that have been exposed for beyond the manufacturer’s allowable set time for primed surfaces. Prepare surface or recoat as required by manufacturer.

H. Minimum Coating Thickness: Apply each material at not thinner than manufacturer's recommended spreading rate. Provide a total dry film thickness of entire coating system as recommended by manufacturer, unless otherwise indicated

I. Brush Applications: Brush-out and work brush coats onto the surfaces in an even film. Eliminate cloudiness, spotting, holidays, laps, brush marks, runs, sags, ropiness, or other surface imperfections. Neatly draw glass lines and color breaks. Brush apply primer or first coats, unless otherwise permitted to use mechanical applicators.

J. Mechanical Applications: Use mechanical methods for coating application when permitted by coating material manufacturer's recommendations.

K. Wherever spray application is used, apply each coat to provide equivalent hiding of brush-applied coats. Do not double-back with spray equipment building-up film thickness of 2 coats in one pass.

L. Completed Work: Match approved samples for color, texture and coverage. Remove, refinish, or recoat work not in compliance with specified requirements. If required paint film thickness is not achieved, additional coats shall be applied per manufacturer's directions until the required thickness is obtained.

3.05 QUALITY ASSURANCE

A. The right is reserved by the OWNER to perform the following material testing procedures at any time, and any number of times, during the period of field painting:

B. The OWNER may engage service of an independent testing laboratory to sample materials being used. Samples of materials delivered to project site may be taken, identified and sealed, and certified in presence of CONTRACTOR.

C. Testing laboratory may perform appropriate tests for any of the following characteristics: Abrasion resistance, apparent reflectivity, flexibility, washability, absorption, accelerated weathering, dry opacity, accelerated yellowness, recoating, skinning, color retention, alkali resistance coating thickness, holidays and quantitative materials analysis.

D. If test results show materials being used do not comply with specified requirements, CONTRACTOR may be directed to stop work, remove non-complying materials; pay for

testing; recoat surfaces coated with rejected materials; and remove rejected materials from previously painted surfaces if, upon recoating with specified materials, two coatings are non-compatible.

3.06 INSPECTION

A. Dry film thickness shall be measured by a contractor-furnished non-destructive magnetic type thickness gage. Measurement procedures shall be as outlined in the SSPC Steel Structures Painting Manual Volume 2, Systems and Specifications. Any deficiencies in required film thickness shall be corrected by the contractor per the recommendations of the coating manufacturer. The thickness gage shall be accurately calibrated using U.S. Department of commerce, National Bureau of Standards Certified Calibrations Plates.

3.07 CLEAN-UP AND PROTECTION

A. Clean-up: During progress of work, remove from project site discarded materials, rubbish, cans and rags resulting from work.

B. Upon completion of work, clean all coating-spattered surfaces. Remove spattered materials by proper methods of washing and scraping, using care not to damage finished surfaces.

C. Protection: Protect work of other trades, whether to be coated or not, against damage. Correct damage by cleaning, repairing or replacing, and recoating, as directed by OWNER's construction representative. Leave work in undamaged condition.

D. Touch up all coated surfaces damaged during course of work to leave work in undamaged condition at the time of acceptance of project.

E. Provide "Wet Paint" signs as required to protect finishes. After coating application, remove temporary protective wrapping provided by others for protection of their work during coatings operation.

END OF SPECIFICATION 33 10 04

SECTION 33 10 05
HDPE PIPE AND FITTINGS

PART 1 - GENERAL

1.01 SUMMARY

A. This section covers HDPE piping and fittings used inside the carrier pipe in the arctic piping system to circulate hot 50% glycol. The glycol loop system is designed for 50% to 60% propylene glycol in water only. Verify compatibility of any new heat transfer fluids with existing fluids currently in use by the City prior to their use.

B. This section covers HDPE piping and fittings used inside the carrier pipe in the arctic piping system to circulate hot 50% glycol. The glycol loop system is designed for 50% to 60% propylene glycol in water only. Verify compatibility of any new heat transfer fluids with existing fluids currently in use by the City prior to their use.

1.02 SECTION INCLUDES

1. General
2. Materials
3. Execution

1.03 REFERENCES

A. The following specifications are referenced in this document and shall be considered integral to this specification:

1. ASTM D3350 Specification for Polyethylene Plastic Pipe and Fittings Materials
2. AWWA C901 Service Polyethylene Pressure Pipe and Tubing, 1/2-inch through 3-inch for Water
3. AWWA C906 Polyethylene Pressure Pipe and Fittings, 4-inch through 63-inch for Water Distribution and Transmission
4. NSF/ANSI-61 Drinking Water System Components-Health Effects

1.04 SUBMITTALS

A. Submittals shall indicate manufacturer, material properties, pressure rating, dimensional information, and conformance to referenced standards.

1.05 QUALITY ASSURANCE

A. All piping shall be marked no less than once every 4 feet with manufacturer standard information to ensure proper identification of pipe size, material, and DR rating.

PART 2 - PRODUCTS

2.01 MATERIALS

A. Pipe

1. HDPE pipe constructed of PE 4710. DR7 or DR9 will be accepted with manufacturers certification of pressure rating at design temperature.

B. Fitting

1. All pipe ends shall be joined with fusion methods approved by the manufacturer with consideration given to the ambient temperature at time of construction.

2. Pipe fittings required shall be fusion welded or electrofusion fittings designed for the temperature and pressure requirements outlined herein.

PART 3 - EXECUTION

3.01 INSTALLATION

A. Installation shall conform to all manufacturers' instructions and the Plastic Pipe Institute Handbook of Polyethylene Pipe, latest edition.

B. Two 1 ½" pipes shall be installed in a 3" x 6" carrier pipe in an arctic piping system. The installation will be complex and the Contractor is instructed to review the plans carefully and plan out the work in advance to ensure all required materials and tools are available at the time of construction.

C. Installer shall be trained and certified by the manufacturer for fusion of HDPE pipe.

END OF SPECIFICATION 33 10 05

SECTION 33 12 13
WATER SERVICE CONNECTIONS

PART 1 - GENERAL

1.01 SUMMARY

A. Section Includes work associated with the following:

1. Pipe and fittings for commercial water service connections to buildings.

2. Water service connection boxes and water service assembly boxes.

3. Valves and corporation stop assemblies.

4. Backflow preventers.

1.02 REFERENCE STANDARDS

A. ASTM International:

1. ASTM D3035 - Standard Specification for Polyethylene (PE) Plastic Pipe (SIDR-PR) Based on Controlled Outside Diameter.

2. ASTM F1005 – Standard Specification for Electrofusion Type Polyethylene Fittings for Outside Diameter Controlled Polyethylene and Crosslinked Polyethylene and Crosslinked Polyethylene (PEX) Pipe and Tubing.

3. ASTM D3350 – Standard Specification for Polyethylene Plastics Pipe and Fittings Materials

B. American Water Works Association:

1. AWWA C901 - Polyethylene (PE) Pressure Pipe and Tubing, 1/2 in. through 3 in., for Water Service.

2. AWWA C906 – Polyethylene (PE) Pressure Pipe and Fittings, 4 In. through 65 In. for Waterworks.

1.03 SUBMITTALS

A. Section 01 33 00 - Submittal Procedures: Requirements for submittals.

B. Product Data: Submit data on pipe materials, pipe fittings, valves, meters, meter setting equipment, service connection boxes, service assembly boxes, circulation pumps, heat tape and accessories.

C. Contractor shall submit service connection plan to Engineer and Owner for Approval prior to installation of a water service. Contractor is to obtain written approval from Engineer and Service Owner before proceeding with installation. Service connection plans will be submitted for all services and shall include details on whether a service connection box is

required, or if water service appurtenances (circulation pump, meter, etc.) can be placed inside facility.

1.04 CLOSEOUT SUBMITTALS

A. Project Record Documents: Record actual locations of piping mains, valves, connections, and invert elevations.

B. Identify and describe discovery of uncharted utilities.

C. HDPE butt fusion and electrofusion joint records.

1.05 QUALITY ASSURANCE

A. Perform Work in accordance with State of Alaska 18 AAC 80 Drinking Water Standards.

1.06 DELIVERY, STORAGE, AND HANDLING

A. Owner Furnished Products Contractor's Responsibilities:

1. Review Owner shop drawings, product data and samples.

2. Arrange and pick up products; inspect for completeness or damage jointly with Owner.

3. Handle, store, install and finish products.

4. Repair and replace items damaged after receipt.

B. Transportation and Handling

1. Coordinate schedule of product delivery to designated prepared areas in order to minimize site storage time and potential damage to stored materials.

2. Deliver products to Project site in an undamaged condition in manufacturer's original sealed container or other packaging system, complete with labels and instructions for handling, storing, unpacking, protecting and installing.

3. Transport and handle products in accordance with manufacturer's instructions.

4. Promptly inspect shipments to ensure that products comply with requirements, quantities are correct, and products are undamaged.

C. Storage and Protection

1. Designate receiving/storage areas for incoming products so that they are delivered according to installation schedule.

2. Store and protect products in accordance with manufacturer's instructions.

3. Store with seals and labels intact and legible.

4. Store products and materials off ground and under protective coverings and custody,

away from walls and in manner to keep these clean and in good condition until used.

D. During loading, transporting, and unloading of materials and products, exercise care to prevent any damage.

PART 2 PRODUCTS

2.01 WATER PIPING AND FITTINGS

A. Polyethylene Pipe:

1. Materials used for the manufacture of polyethylene pipe and fittings shall be made from a PE 3408 high density polyethylene resin compound meeting cell classifications 34534C per ASTM D3350; and meeting Type 111, Class C, Category 5, Grade P34 per ASTM D1238.

2. High Density Polyethylene (HDPE) pipe shall comply with AWWA Specifications C906 or C901 as appropriate for size.

3. If rework compounds are required, only those generated in the Manufacturer's own plant from resin compounds of the same class and type from the same raw material supplier shall be used.

4. Dimensions and workmanship shall be as specified by ASTM F714. HDPE fittings and transitions shall meet ASTM D3261. HDPE pipe shall have a minimum density of 0.955 grams per cubic centimeter. All HDPE pipe and fittings shall have a Hydrostatic Design Basis (HDB) of 1,600 psi.

5. HDPE pipe and accessories shall have a Standard Dimension Ration (SDR) of 11 and be pressure rated to a minimum of 160 psi.

B. Fittings

1. All molded fittings and fabricated fittings shall be fully pressure rated to match the pipe SDR pressure rating to which they are made. All fittings shall be molded or fabricated by the manufacturer. No Contractor fabricated fittings shall be used unless approved by the Engineer.

2. The manufacturer of the HDPE pipe shall supply all HDPE fittings and accessories as well as any adapters and/or specials required to perform the work as shown on the Drawings and specified herein.

3. All fittings shall be installed using butt-fused fittings or pre-manufactured transition fittings and must be approved by the Engineer.

4. All transitions from HDPE pipe to other pipe materials and valves shall be made per the HDPE pipe manufacturer's recommendations and specifications. Transitions for water services shall be accomplished using pre-manufactured press-on fittings manufactured by Poly-Cam, or approved equal. Metallic end of transition fittings shall be stainless steel threaded or flanged. Threads to match adjacent connection.

2.02 SERVICE SADDLES

C. Service saddles for connection to mains shall be electrofusion branch saddles designed and manufactured in accordance with ASTM F-1055.

D. Branch saddles shall be produced from pre-blended virgin resin that has a PPI listing of PE3408 in accordance with ASTM D3350. The resin shall be listed by NSF 61 for use with potable water.

E. Manufacturer: Georg Fischer Central Plastics or approved equal.

2.03 BALL VALVES

F. Ball valve shall be threaded lead-free brass ball valve, Nibco T-FP-600A-LF-LL or approved equal. Valve shall be NSF/ANSI 61 and NSF/ANSI 372 certified. Valve shall have a locking lever handle capable of being locked with a padlock.

PART 3 EXECUTION

3.01 EXAMINATION

A. Coordinate schedule for start-up of various service lines.

B. Verify building service connection and municipal utility water main size, location, and invert are as indicated on Plans.

C. Verify each piece of equipment and service lines has been checked for proper assembly.

3.02 PREPARATION

A. Cut pipe ends square, ream pipe and tube ends to full pipe diameter, remove burrs.

B. Remove scale and dirt on inside and outside before assembly.

C. Prepare pipe connections to equipment with flanges or unions.

3.03 INSTALLATION - BALL VALVE ASSEMBLY

A. Make connection for each different kind of water main using suitable materials, equipment and methods approved by the Engineer.

B. Provide service saddles for all connections to HDPE mains.

C. For plastic pipe water mains, exercise care against crushing or causing other damage to water mains at time of tapping or installing electrofusion saddle or ball valve.

D. Use proper seals or other devices so no leaks are left in water mains at points of tapping.

E. Service taps shall be oriented on the water main as indicated in the Drawings.

3.04 INSTALLATION - PIPE AND FITTINGS

A. Route pipe in straight line.

B. Install pipe to allow for expansion and contraction without stressing pipe or joints.

C. Install access fittings to permit disinfection of water system performed under Section 33 13 00**.**

D. Install Work in accordance with State of Alaska 18 AAC 80 – Drinking Water**.**

3.05 SERVICE CONNECTIONS

A. Install water service in accordance with ball valves and drain tees as indicated on Plans.

B. Install water service to existing facilities identified on plans. Service connection assemblies shall be installed or service appurtenances (circulation pump, meter, etc.) shall be installed inside building. Contractor's service plan shall indicate which method will be constructed. Service plan will be approved by Service owner and Engineer.

C. Service lines must only be connected once the mainline has been successfully tested and disinfected.

3.06 SERVICE SADDLES

A. Clean mainline pipe prior to fusing service saddle.

B. Install per manufacturer's instructions.

C. Service saddles shall be inspected for leaks prior to installation of service lines.

3.07 FLUSHING OF DOMESTIC WATER PIPING SYSTEM

A. Flush each service in accordance with Section 33 13 00 Disinfection of Water utility Distribution Piping**.**

3.08 FIELD QUALITY CONTROL

A. Pressure test system in accordance with AWWA C901 and the following:

1. Test Pressure: Not less than 120 psi unless otherwise approved by the Engineer.

2. Test Procedure shall be in accordance with Section 33 11 13 Public Water Utility Distribution Piping.

B. When tests indicate Work does not meet specified requirements, Work shall be replaced and retest at the expense of the Contractor.

C. Joints and are to be left exposed until Work is flushed and inspected. Engineer will not be on-site at all times, Work will be inspected post-installation.

END OF SECTION 33 12 13

SECTION 33 13 00
DISINFECTING OF WATER UTILITY DISTRIBUTION PIPING

PART 1 - GENERAL

1.01 SUMMARY

A. Section includes disinfection of potable water distribution system which includes the water services greater than 2" supply; and sampling and reporting results.

1.02 REFERENCES

A. American Water Works Association:

1. AWWA B300 - Hypochlorites.
2. AWWA B303 - Sodium Chlorite.
3. AWWA C651 - Disinfecting Water Mains.

1.03 SUBMITTALS

A. Section 01 33 00 - Submittal Procedures: Requirements for submittals.

B. Product Data: Submit procedures, proposed chemicals, and treatment levels for review.

C. Sample Reports: Indicate results comparative to specified requirements. A disinfection plan and discharge of the disinfectant concentrated water must be submitted for review. The Engineer will receive and Approve 48 hours before disinfection commences.

1.04 CLOSEOUT SUBMITTALS

A. Disinfection Report:

1. Name of the person administrating the disinfectant
2. Type and form of disinfectant used.
3. Date and time of disinfectant injection start and time of completion.
4. Sample locations.
5. Name of person collecting samples.
6. Initial and 24 hour disinfectant concentration and residuals in treated water in ppm for each outlet sampled.
7. Date and time of flushing start and completion.
8. Disinfectant residual after flushing in ppm for each outlet sampled.

9. Information of the State Approved Laboratory certified to conduct the test of the samples

10. Copies of the analytical reports from the laboratory

B. Bacteriological Report:

1. Date issued, project name, and testing laboratory name, address, and telephone number.

2. Time and date of water sample collection.

3. Name of person collecting samples.

4. Sample locations.

5. Initial and 24 hour disinfectant concentration and residuals in ppm for each outlet sampled.

6. Coliform bacteria test results for each outlet sampled.

7. Certify water conforms, or fails to conform, to bacterial standards for potable water.

C. Water Quality Certificate: Certify water conforms to quality standards of State of Alaska, suitable for human consumption.

1.05 QUALITY ASSURANCE

A. Perform Work in accordance with AWWA C651.

1.06 QUALIFICATIONS

A. Sampling Firm: Company certified by State of Alaska in testing potable water systems.

B. Submit bacteriologist's signature and authority associated with testing of the samples.

PART 2 - PRODUCTS

2.01 DISINFECTION CHEMICALS

A. Chemicals: AWWA B300, Hypochlorite, AWWA B301, and AWWA B303, Sodium Chlorite.

PART 3 - EXECUTION

3.01 EXAMINATION

A. Verification of existing conditions before starting work.

B. Verify piping system has been cleaned, inspected, and pressure tested.

C. Perform scheduling and disinfecting activity with start-up, water pressure testing, adjusting and balancing, demonstration procedures, including coordination with related systems.

3.02 INSTALLATION

A. Provide and attach required equipment to perform the Work of this section.

B. Perform disinfection of water distribution system and installation of system and pressure testing. Samples will be taken during the disinfection test as indicated by the Sampling Plan and as referenced in AWWA C651.

C. Inject treatment disinfectant into piping system.

D. Maintain disinfectant in system for 24 hours. Maximum free residual concentration shall be 20mg/L.

E. Flush, circulate, and clean until required cleanliness is achieved; use City domestic water.

F. Replace permanent system devices removed for disinfection.

3.03 FIELD QUALITY CONTROL

A. Disinfection, Flushing, and Sampling:

1. Disinfect pipeline installation in accordance with AWWA C651. Use of liquid chlorine is not permitted.

2. Upon completion of retention period required for disinfection, flush pipeline until chlorine concentration in water leaving pipeline is no higher than that generally prevailing in existing system or is acceptable for domestic use.

3. Legally dispose of chlorinated water. Dam and contain any accidental discharge of heavily chlorinated liquids. Prior to discharge of chlorinated water to surface water, wetlands or sewers, apply neutralizing chemical to chlorinated water to neutralize chlorine residual remaining in water.

4. After final flushing and before pipeline is connected to existing system, or placed in service, employ an approved independent testing laboratory to test and certify water quality suitable for human consumption.

5. Do not place water piping in service until water testing certifies that water quality is suitable for human consumption.

6. If testing indicates water is not suitable, Contractor shall re-disinfect the system and retest until suitable results are obtained at the Contractor expense.

END OF SECTION 33 13 00

ATTACHMENT A

EJCDC
ENGINEERS JOINT CONTRACT DOCUMENTS COMMITTEE

NOTICE OF AWARD

Date of Issuance:

Owner: City of Bethel

Owner's Contract No.:

Engineer: DOWL

Engineer's Project No.: 1123.61833.01

Project: Institutional Corridor Piped Water System

Contract Name:

Bidder:

Bidder's Address:

TO BIDDER:

You are notified that Owner has accepted your Bid dated [_____] for the above Contract, and that you are the Successful Bidder and are awarded a Contract for:

_____ .

[describe Work, alternates, or sections of Work awarded]

The Contract Price of the awarded Contract is: $_____ *[note if subject to unit prices, or cost-plus]*

[ ] unexecuted counterparts of the Agreement accompany this Notice of Award, and one copy of the Contract Documents accompanies this Notice of Award, or has been transmitted or made available to Bidder electronically. *[revise if multiple copies accompany the Notice of Award]*

☐ a set of the Drawings will be delivered separately from the other Contract Documents.

You must comply with the following conditions precedent within 15 days of the date of receipt of this Notice of Award:

1. Deliver to Owner [____]counterparts of the Agreement, fully executed by Bidder.
2. Deliver with the executed Agreement(s) the Contract security *[e.g., performance and payment bonds]* and insurance documentation as specified in the Instructions to Bidders and General Conditions, Articles 2 and 6.
3. Other conditions precedent (if any):

Failure to comply with these conditions within the time specified will entitle Owner to consider you in default, annul this Notice of Award, and declare your Bid security forfeited.

Within ten days after you comply with the above conditions, Owner will return to you one fully executed counterpart of the Agreement, together with any additional copies of the Contract Documents as indicated in Paragraph 2.02 of the General Conditions.

Owner**:**

Authorized Signature

By:

Title:

Copy: Engineer

EJCDC
ENGINEERS JOINT CONTRACT DOCUMENTS COMMITTEE

NOTICE TO PROCEED

Owner: City of Bethel	Owner's Contract No.:
Contractor:	Contractor's Project No.:
Engineer: DOWL	Engineer's Project No.: 1123.61833.01
Project: Institutional Corridor Piped Water System	Contract Name:
	Effective Date of Contract:

TO CONTRACTOR:

Owner hereby notifies Contractor that the Contract Times under the above Contract will commence to run on [_____, 20__]. *[see Paragraph 4.01 of the General Conditions]*

On that date, Contractor shall start performing its obligations under the Contract Documents. No Work shall be done at the Site prior to such date. In accordance with the Agreement, the date of Substantial Completion is September 30, 2017, and the date of readiness for final payment is December 31, 2017.

Before starting any Work at the Site, Contractor must comply with the following:
[Note any access limitations, security procedures, or other restrictions]

Owner**:**

Authorized Signature

By:

Title:

Date Issued:

Copy: Engineer

EJCDC
ENGINEERS JOINT CONTRACT DOCUMENTS COMMITTEE

Contractor's Application for Payment No.

	Application Period:	Application Date:
To (Owner):	From (Contractor):	Via (Engineer):
Project:	Contract:	
Owner's Contract No.:	Contractor's Project No.:	Engineer's Project No.:

Application For Payment

Change Order Summary

Approved Change Orders		
Number	Additions	Deductions
TOTALS		
NET CHANGE BY CHANGE ORDERS		

1. ORIGINAL CONTRACT PRICE..... $ _____

2. Net change by Change Orders..... $ _____

3. Current Contract Price (Line 1 ± 2)..... $ _____

4. TOTAL COMPLETED AND STORED TO DATE
(Column F total on Progress Estimates)..... $ _____

5. RETAINAGE:

a. X _____ Work Completed..... $ _____

b. X _____ Stored Material..... $ _____

c. Total Retainage (Line 5.a + Line 5.b)..... $ _____

6. AMOUNT ELIGIBLE TO DATE (Line 4 - Line 5.c)..... $ _____

7. LESS PREVIOUS PAYMENTS (Line 6 from prior Application)..... $ _____

8. AMOUNT DUE THIS APPLICATION..... $ _____

9. BALANCE TO FINISH, PLUS RETAINAGE
(Column G total on Progress Estimates + Line 5.c above)..... $ _____

Contractor's Certification

The undersigned Contractor certifies, to the best of its knowledge, the following:
(1) All previous progress payments received from Owner on account of Work done under the Contract have been applied on account to discharge Contractor's legitimate obligations incurred in connection with the Work covered by prior Applications for Payment;
(2) Title to all Work, materials and equipment incorporated in said Work, or otherwise listed in or covered by this Application for Payment, will pass to Owner at time of payment free and clear of all Liens, security interests, and encumbrances (except such as are covered by a bond acceptable to Owner indemnifying Owner against any such Liens, security interest, or encumbrances); and
(3) All the Work covered by this Application for Payment is in accordance with the Contract Documents and is not defective.

Contractor Signature

By:	Date:

Payment of: $ _____
(Line 8 or other - attach explanation of the other amount)

is recommended by: _____ _____
(Engineer) (Date)

Payment of: $ _____
(Line 8 or other - attach explanation of the other amount)

is approved by: _____ _____
(Owner) (Date)

Approved by: _____ _____
Funding or Financing Entity (if applicable) (Date)

© 2013 National Society of Professional Engineers for EJCDC. All rights reserved.

Progress Estimate - Unit Price Work

Contractor's Application

For (Contract):	Application Number:
Application Period:	Application Date:

A					B	C	D	E	F		
Item		Contract Information									
Bid Item No.	Description	Item Quantity	Units	Unit Price	Total Value of Item ($)	Estimated Quantity Installed	Value of Work Installed to Date	Materials Presently Stored (not in C)	Total Completed and Stored to Date (D + E)	% (F / B)	Balance to Finish (B - F)
	Totals										

© 2013 National Society of Professional Engineers for EJCDC. All rights reserved.

EJCDC
ENGINEERS JOINT CONTRACT DOCUMENTS COMMITTEE

CERTIFICATE OF SUBSTANTIAL COMPLETION

Owner:	Owner's Contract No.:
Contractor:	Contractor's Project No.:
Engineer:	Engineer's Project No.:
Project:	Contract Name:

This [preliminary] [final] Certificate of Substantial Completion applies to:

☐ All Work ☐ The following specified portions of the Work:

_____

Date of Substantial Completion

The Work to which this Certificate applies has been inspected by authorized representatives of Owner, Contractor, and Engineer, and found to be substantially complete. The Date of Substantial Completion of the Work or portion thereof designated above is hereby established, subject to the provisions of the Contract pertaining to Substantial Completion. The date of Substantial Completion in the final Certificate of Substantial Completion marks the commencement of the contractual correction period and applicable warranties required by the Contract.

A punch list of items to be completed or corrected is attached to this Certificate. This list may not be all-inclusive, and the failure to include any items on such list does not alter the responsibility of the Contractor to complete all Work in accordance with the Contract.

The responsibilities between Owner and Contractor for security, operation, safety, maintenance, heat, utilities, insurance, and warranties upon Owner's use or occupancy of the Work shall be as provided in the Contract, except as amended as follows: *[Note: Amendments of contractual responsibilities recorded in this Certificate should be the product of mutual agreement of Owner and Contractor; see Paragraph 15.03.D of the General Conditions.]*

Amendments to Owner's responsibilities: ☐ None
☐ As follows

Amendments to Contractor's responsibilities: ☐ None
☐ As follows:

The following documents are attached to and made a part of this Certificate: *[punch list; others]*

This Certificate does not constitute an acceptance of Work not in accordance with the Contract Documents, nor is it a release of Contractor's obligation to complete the Work in accordance with the Contract.

EXECUTED BY ENGINEER:	RECEIVED:	RECEIVED:
By: _____	By: _____	By: _____
(Authorized signature)	Owner (Authorized Signature)	Contractor (Authorized Signature)
Title: _____	Title: _____	Title: _____
Date: _____	Date: _____	Date: _____

EJCDC
ENGINEERS JOINT CONTRACT DOCUMENTS COMMITTEE

Change Order No. _____

Date of Issuance:	Effective Date:
Owner:	Owner's Contract No.:
Contractor:	Contractor's Project No.:
Engineer:	Engineer's Project No.:
Project:	Contract Name:

The Contract is modified as follows upon execution of this Change Order:

Description:

Attachments: *[List documents supporting change]*

CHANGE IN CONTRACT PRICE	**CHANGE IN CONTRACT TIMES** ***[note changes in Milestones if applicable]***
Original Contract Price: $_____	Original Contract Times: Substantial Completion: _____ Ready for Final Payment: _____ days or dates
[Increase] [Decrease] from previously approved Change Orders No. ___ to No. ___: $_____	[Increase] [Decrease] from previously approved Change Orders No. ___ to No. ___: Substantial Completion: _____ Ready for Final Payment: _____ days
Contract Price prior to this Change Order: $_____	Contract Times prior to this Change Order: Substantial Completion: _____ Ready for Final Payment: _____ days or dates
[Increase] [Decrease] of this Change Order: $_____	[Increase] [Decrease] of this Change Order: Substantial Completion: _____ Ready for Final Payment: _____ days or dates
Contract Price incorporating this Change Order: $_____	Contract Times with all approved Change Orders: Substantial Completion: _____ Ready for Final Payment: _____ days or dates

RECOMMENDED:	ACCEPTED:	ACCEPTED:
By: _____	By: _____	By: _____
Engineer (if required)	Owner (Authorized Signature)	Contractor (Authorized Signature)
Title: _____	Title _____	Title _____
Date: _____	Date _____	Date _____

Approved by Funding Agency (if applicable)

By: _____ Date:

Title: _____

ATTACHMENT B

City of Bethel

Institutional Corridor Piped Water System

Owner Furnished Materials

Item No.	Description	Unit	Quantity
1	8" x 20" Insulated Pipe (with all necessary joint appurtenances)	LF	8,700
2	8" x 20" Arctic Pipe long sweep 90 degree bend	each	12
3	Dual 3” Conduit Arctic Water Service Pipe	LF	3,000
4	Helical Piers (Including Bit Sections, and 7’ Extensions)	Each	100

Owner furnished materials have been procured using the specifications provided and were found to be acceptable at time of purchase. Specifications apply to procurement of additional materials. Contractor, Engineer, and Owner are to approve the condition of the owner furnished materials prior to Contractor using or transporting any materials from the site. The Owner and Engineer will not be liable for damage to any of the materials during transport and installation. Contractor will cover all costs for replacement of owner furnished materials if damaged at any point once materials are in Contractor’s possession.

ATTACHMENT C

DOWL

INSPIRATION ▪ INNOVATION ▪ INTEGRITY

Subsurface Exploration and Foundation Recommendations

Institutional Corridor Piped Water System

Bethel

June 2015

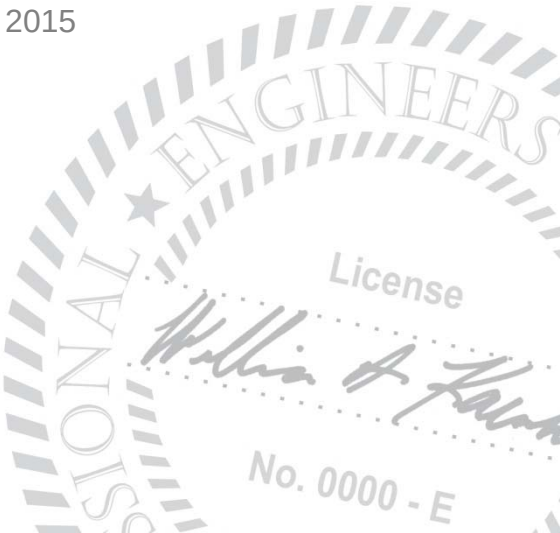

DOWL

June 25, 2015
W.O. 61833.01
Area 7
Report No. 5609

Mr. Lakhani Muzaffar
City of Bethel
PO Box 1388
Bethel, Alaska 99559

Subject: Subsurface Exploration and Foundation Recommendations
Institutional Corridor Piped Water System, Bethel, Alaska

Dear Mr. Muzaffar:

The attached report presents the results of our subsurface exploration and our foundation recommendations for the proposed Institutional Corridor Pipe Water System in Bethel, Alaska. This report includes the logs of test borings drilled during the current exploration, logs of nearby borings drilled in previous explorations, the results of laboratory tests, and recommendations regarding foundations, earthwork, and drainage.

If you have any questions regarding this report or its use, or if we may provide additional services, please call.

Sincerely,
DOWL

Keri A. Nutter, CPG
Geotechnical Engineering Manager

Reviewed by:
DOWL

Maria E. Kampsen, P.E.
Region Manager, Materials

20150626.D61833.Muzaffar.KAN.saf

Attachment(s): As stated

SUBSURFACE EXPLORATION AND FOUNDATION RECOMMENDATIONS

INSTITUTIONAL CORRIDOR PIPED WATER SYSTEM BETHEL, ALASKA

Prepared for:

City of Bethel
PO Box 1388
Bethel, Alaska 99559

Prepared by:

DOWL
4041 B Street
Anchorage, Alaska 99503
(907) 562-2000

W.O. 61833.01
Report No. 5609

June 2015

TABLE OF CONTENTS

Page

1.0 INTRODUCTION 1
1.1 Planned Development 1
1.2 Purpose of Exploration 1
1.3 Scope of Work 1

2.0 PHYSICAL SETTING 4
2.1 Regional Geology 4
2.2 Climate 4

3.0 SITE CONDITIONS 5
3.1 Surface 5
3.2 Subsurface 5
3.3 Groundwater 6
3.4 Permafrost 6

4.0 ENGINEERING ANALYSIS AND RECOMMENDATIONS 7
4.1 Foundations 7
4.2 Utilities 8
4.3 Earthwork 9
4.4 Observations 10

5.0 RESEARCH AND FIELD EXPLORATION 11
5.1 Research 11
5.2 Field Exploration 11

6.0 LABORATORY TESTS 12
6.1 Moisture Content 13
6.2 Particle Size Distribution Tests 13
6.3 Limited Mechanical Analysis 13
6.4 Thaw Consolidation Tests 14

7.0 REFERENCES 16

FIGURES **Page**

Figure 1: Vicinity Map....3

TABLES

Table 1: Average Monthly Temperatures and Precipitation....4
Table 4: Limited Mechanical Analysis Test Results....14
Table 4: Thaw Consolidation Test Results....15

APPENDICES

Appendix A....Test Boring Location Map
Appendix B....Test Boring Logs and Descriptive Guide
Appendix C....Laboratory Test Results
Appendix D....Thermistor Measurements
Appendix E....Supplemental Soils Information

1.0 INTRODUCTION

The City of Bethel plans to extend piped water service from the City Subdivision Water Treatment Plant to the institutional and commercial facilities, and other users located along the Chief Eddie Hoffman Highway (CEHH). This report presents the results of our field exploration, laboratory soil testing program, and our recommendations regarding foundation design and site development in support of the Institutional Corridor Piped Water System project. This report is valid only for the planned development as it is currently understood. Any changes to the current development plans, including relocating structures, may impact the recommendations contained herein and should be evaluated by the project geotechnical engineer.

1.1 Planned Development

The proposed Institutional Corridor Piped Water System project will add approximately 8,800 feet of new water main, 1,300 feet of new sewer force main, and 20 new service lines. The water main will extend from an existing loop (Loop A) at the Water Treatment Plant, south to users along the CEHH, and return to the existing Loop A near the power plant. The project location is shown in Figure 1.

1.2 Purpose of Exploration

The purpose of this exploration is to determine the subsurface soil and groundwater conditions at the site, to perform laboratory soil tests to determine physical properties of the site soils, analyze the findings, and to make engineering recommendations regarding the design and construction of the geotechnical-related portions of the project.

1.3 Scope of Work

DOWL submitted a proposal dated October 31, 2014, to conduct a geotechnical exploration consisting of drilling and sampling test borings, geotechnical laboratory testing, analysis of the findings, and preparation of a geotechnical report.

In brief, the scope included:

- Twenty-five to thirty test borings to depths of 20 feet in the planned building area; after a desktop study of previous investigations it was determined that only twelve new borings were needed.

- Perform various laboratory soils testing;
- Analyze the geotechnical aspects of the planned development with respect to the site soils and groundwater; and
- Prepare a report of findings and recommendations.

Our proposal was accepted and we received Notice-to-Proceed on November 26, 2014. The investigation was completed as planned above with the following exception:

- Two test borings were removed from the investigation due to access and environmental concerns (Test Borings 4 and 6).

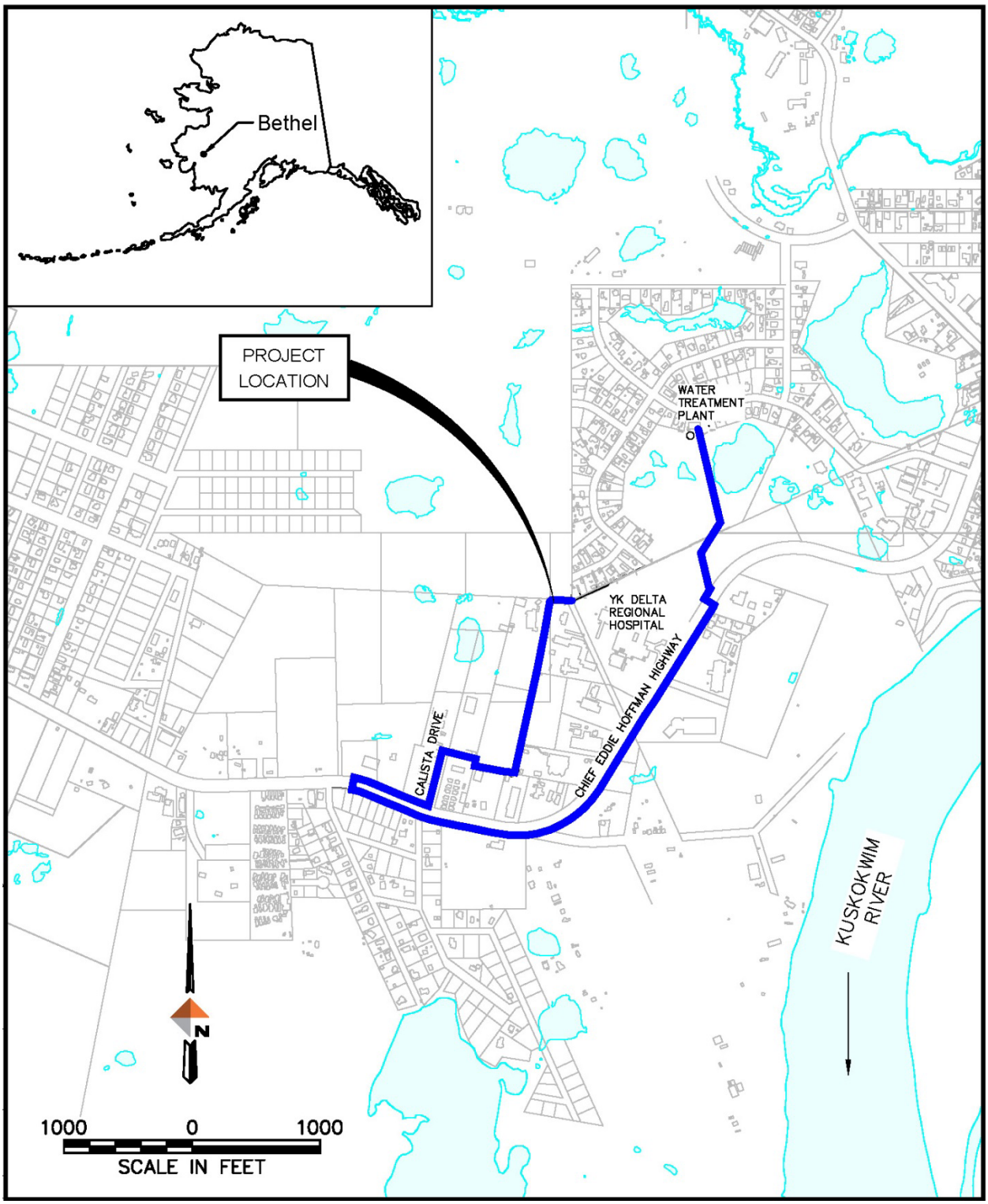

Figure 1: Vicinity Map

2.0 PHYSICAL SETTING

The proposed waterline corridor is located in Bethel near the institutional corridor. The project follows the CEHH between Akiak Drive and Calista Drive. Most of the project area is developed and consists of commercial and institutional facilities along CEHH and residential development near the north end of the project area.

2.1 Regional Geology

The City of Bethel is located about 60 miles upriver from the mouth of the Kuskokwim River, in the southeastern portion of a large deltaic province known as the Yukon-Kuskokwim Lowland. This portion of the Kuskokwim Delta is characterized by extensive low-lying flatlands with numerous lakes and swamps. The entire region is blanketed by thick floodplain deposits that are composed of silts and fine sands. Bedrock does not outcrop in the Bethel area, and gravel is very scarce. Most of the area is underlain with discontinuous permafrost.

2.2 Climate

Bethel has a subarctic climate and is influenced by both marine and continental weather. Average monthly temperatures and precipitation for Bethel and vicinity, for the period between 1971 and 2000, are shown in Table 1.

Table 1: Average Monthly Temperatures and Precipitation

	Jan	Feb	Mar	Apr	May	Jun	Jul	Aug	Sept	Oct	Nov	Dec
Temperature (°F)	6	8.2	13.5	25.2	40.9	51.5	55.4	53.1	45.1	30	17.7	7.3
Precipitation (in)	0.73	0.07	0.74	0.7	0.97	1.52	2.15	3.38	2.4	1.41	1.25	1.06

3.0 SITE CONDITIONS

This section reports interpretations and opinions concerning the surface and subsurface soil and groundwater conditions at the site. The site conditions described are valid for the data collected within the scope of work. If additional data becomes available, some or all of the interpretations and opinions expressed herein could change. We should be notified immediately if the conditions found at the site are different from those encountered during this investigation.

The soil descriptions and stratigraphy contained herein, and the classifications shown on the test boring logs, are the project geotechnical engineer's interpretation of the field logs and the results of laboratory soil testing. The largest particle size that can be recovered with standard drill hole samplers is often smaller than the maximum particle size in a gravelly soil deposit. Therefore, the soil descriptions and test results for gravelly soils tend to be biased toward the finer particle sizes.

Refer to the Test Boring Log Descriptive Guide in Appendix B, immediately following the test boring logs, for a more detailed presentation on sample sizes, sample quality, frost classifications, soil types, and the soil classification procedures.

3.1 Surface

The area around Bethel is characterized by tundra and grasses, with occasional stands of willow and alder. CEHH is a paved road with gravel shoulders and grassy slopes. Portions of the proposed waterline are located within undeveloped areas where tundra is present and willows have grown in disturbed areas and at the toes of building pads.

3.2 Subsurface

The soils at the site are generally consistent. In undeveloped areas, peat is present to depths of one to five feet followed by sands and silts. Generally, up to three feet of fill material was observed in areas that have been previously developed. See the Test Boring Logs in Appendix B for a graphic representation of the soils encountered, and for greater detail about each subsurface layer.

Fill. Fill material was observed in Test Borings 7, and 10 through 12 to a depth of about three feet; six feet of fill was observed in Test Boring 11. The fill material consists of silty sand

with approximately 20 to 30 percent silt and has a moisture content ranging from 13 to 19 percent. The fill material is nonplastic.

Peat. Peat was observed along most areas of the proposed waterline, and below the fill material in previously developed areas. The peat ranges in thickness from one to five feet, with the deepest peat present within low lying areas. The peat was generally observed to be frozen at the time of the investigation and is expected to be very soft.

Sands. The sands classify as Poorly Graded Sand (SP, SP-SM) to Silty Sand (SM). The moisture content of the poorly graded sands range from 5 percent to 53 percent and have N-values ranging from 10 to 20 for thawed samples and 37 to 87 for frozen samples. The moisture content of the Silty Sands range from 14 percent to 75 percent and have N-values of 4 to 18 for thawed samples and 24 to 61 for frozen samples.

Silts. Silt with Sand (ML) was observed in Test Boring 12 at a depth of about 18 feet below the ground surface. The soil was thawed at the time of the investigation with a moisture content measured to be 26 percent and an N-value of 8.

The soil exploration was conducted in the winter; the ground was frozen and snow covered. Frozen ground was encountered to depths between 3 and 7 feet. This is interpreted to be the seasonal active layer.

3.3 Groundwater

Groundwater was encountered in four test borings (Test Borings 1, and 7 through 9) at depths of 4 to 12 feet. The groundwater was observed where thawed soils are present in low-lying areas and adjacent to disturbed ground/development. The observed groundwater elevations are shown on the graphic test boring logs in Appendix B.

3.4 Permafrost

Permafrost was encountered in six of the ten test borings at depths of 5 to 17 feet; these areas include the segment between the City of Bethel Water Treatment Plant and the hospital (Test Borings 1 through 3), and north of Calista Drive (Test Borings 5, 8, and 9). Temperatures presented on the test boring logs may not represent the true ground temperature due to heating

during drilling, and exposure of the samples to air temperature. For a more accurate reading, after each boring was completed, a 3/4-inch sealed PVC pipe was installed in the hole before the auger was removed. A thermistor string with thermistor nodes located at four-foot intervals was lowered into the pipe, and the soil temperatures were measured. The results of these measurements are presented in Appendix D.

4.0 ENGINEERING ANALYSIS AND RECOMMENDATIONS

This section of the report includes interpretations and opinions concerning the interaction of the planned development with the surface and subsurface conditions detected by the field exploration and laboratory tests. It reflects an evaluation of the data collected during the field exploration and soil laboratory tests, and an understanding of the planned development. The analysis is valid for the data collected within the scope of work. The collection of additional data, or a change in the development plans, could provide information which would alter some or all of the interpretations and opinions expressed herein.

These recommendations are based on professional judgment and experience and the data collected during the site exploration and soil laboratory tests. These recommendations generally are not the only design options available; there may be several acceptable alternatives. These recommendations are not intended to represent the only way, but rather to indicate one appropriate option based on the information available.

4.1 Foundations

Helical Piles. The waterline may be supported using helical piles. The helical piles should have nominal diameter of 2.5 inches and at least two helices; the upper helix should be 12-inches, and the lower helix should be 10- to 12-inch diameter. The helix spacing should be approximately 3 times the diameter of the bottom helix, and the spacing should be at even multiples of the helix pitch to minimize soil disturbance. The helical piles should be installed such that the upper helix has a minimum embedment of 15 feet below ground surface and a minimum installation torque of 1,500 foot-pounds.

The helical piles should be installed according to the manufacturer recommendations. They should be screwed into the soil surface without augering (i.e. no cuttings should be pulled out),

as augering may reduce the capacity of the helical piles. The advance rate of the piles during installation should be equal to the pitch of the helix for each rotation, to minimize ground disturbance. Installation torque should be measured as the piles are installed. If winter construction is planned, the surface frost may increase the torque needed to install the piles so much that the piles cannot be screwed in without damage. To prevent this, a pilot hole may be used to assist installation. A qualified inspector should be present during installation to observe the installation methods and record torque per foot of embedment, rate of embedment and embedment depth.

Driven Pipe Piles. As permafrost was encountered in two areas along the proposed waterline alignment, an alternative to helical anchors as the main support system for the structure could be a driven pipe pile foundation. The pipe piles should be at least 6-inch nominal diameter, with 3/8-inch wall thickness with a minimum embedment of 20 feet below grade to prevent frost jacking. Pre-drilling may be necessary to avoid damaging the pile during driving in areas where permafrost is present. The piles should be driven open-ended with hardened driving shoes (flush outside) to prevent pile damage during driving.

Under the existing site conditions and required depths of embedment, it could be difficult to install the piles as described, so pre-drilling may be necessary. If it is demonstrated to be impossible to install the piles to depths as described above, pre-drilled holes, a maximum of four inches smaller in diameter than the pipe and a maximum of three feet less than the driven depth will be permitted to aid installation.

4.2 Utilities

Lift Station. A lift station is planned to be constructed near the intersection of CEHH and Old Hospital Road. The lift station will be 6 feet in diameter and buried 24 inches below the ground surface. As peat was observed at the proposed lift station site, the soils below the lift station should be over-excavated to a depth of 4 feet to remove the peat from below the structure. Four inches of EPS insulation should also be installed below the lift station footing and extend horizontally beyond the footing for 36 inches.

Utility Trench Fill. All organic soils should be removed and replaced with structural fill below buried pipe systems that carry fluids either under pressure or by gravity. A suitable granular

bedding material should be placed and compacted to a depth of at least six inches below all utility lines. This bedding material should extend six inches above the top of pipe, and should be compacted to a density of at least 95% of the maximum unit weight determined in accordance with ASTM Standard Test Methods for Maximum Index Density and Unit Weight of Soils Using a Vibratory Table (D4253) or ASTM Standard Test Methods for Laboratory Compaction Characteristics of Soil Using Modified Effort [56,000 ft-lbf/ft3 (2,700 kN-m/m3)] (D1557). The remainder of the trench should be backfilled with classified material. This material should be compacted in lifts not exceeding one foot in thickness to 95% in accordance with ASTM D4253 or ASTM D1557. All excavations should be completely dewatered before placement of structural fill.

4.3 Earthwork

Where the proposed waterline is to the constructed along the embankment slope of the CEHH, consideration must be taken for the stability of the slopes. Installation of the waterline foundations will likely require working space to be benched into the embankment fill slope; any cuts into the existing road embankment must be sloped at a minimum 2:1 (horizontal:vertical) to maintain stability of the existing road and safety of workers.

Structural Fill. Structural fill is defined as load-bearing fill placed under footings, building foundations, structural slabs, roads, and parking areas. All structural fill should consist of non-frost susceptible (NFS) or possibly frost susceptible (PFS) gravel and contain no lumps, frozen material, organic matter, or other deleterious matter. Structural fill shall meet the following gradation requirements:

Sieve Size	Percent Finer
3”	100*
1-1/2”	70-100
3/4”	30-100
½”	25-100
No. 4	20-49
No. 40	0-25
No. 200	0-6
0.02mm	0-3

* The fill may contain up to 10% cobbles.

The upper 6 inches of structural fill below spread footings should not contain gravel larger than 2 inches to facilitate fine grading.

Other fill material, which does not meet this gradation requirement, may be acceptable for use. However, the gradation of such material should be evaluated by the project geotechnical engineer prior to its use.

Fill Testing. Frequent, in-place density tests should be performed in each lift of fill to verify that the fill has been properly compacted prior to placing subsequent lifts. The number of tests performed in each lift should be commensurate with the size of the area worked by the contractor, the variability of the soil types used as fill, and the amount of time an inspector spends on site observing the work. At a minimum, we recommend one in-place density test per 100 lineal feet of utility trench, every lift.

Dewatering and Drainage. It is important that all water be removed from excavations until they are properly backfilled. It is the contractor's responsibility to determine the appropriate dewatering techniques for the construction methods chosen and for the soil and water conditions encountered.

4.4 Observations

It is important to the performance of the planned waterline foundation that the foundation installation operations be observed by qualified inspection/testing personnel under the supervision of a geotechnical engineer.

Continuous observation of pile installation and complete records should be kept by qualified personnel under the general supervision of a geotechnical engineer. The helical pile pull tests should also be performed under the supervision of a geotechnical engineer. The pile driving records should be reviewed and analyzed by the engineer to help verify the performance of the foundations.

The inspection/testing personnel should be employed by the owner or owner’s representative, not by the contractor, to avoid any inherent conflict of interest and to better ensure that the required level of quality assurance is achieved.

5.0 RESEARCH AND FIELD EXPLORATION

This section presents the technical data obtained from office research and field exploration. The methods and procedures used to obtain the data are presented. The data should be considered accurate only at the locations specified and only to the degree implied by the methods used. The data presented was obtained specifically to address the needs of the design, and may not be adequate for construction purposes.

5.1 Research

Prior to selecting the current test boring locations, previous geotechnical reports were evaluated for existing soils information within the project area.

In 1993 DOWL Engineers performed a subsurface investigation, consisting of ten test borings, for the Yukon-Kuskokwim Health Center.

In 2004, the Alaska Department of Transportation and Public Facilities drilled 21 test borings and excavated 14 test pits along the Chief Eddie Hoffman Highway.

These reports were reviewed to determine the anticipated soil and groundwater/permafrost conditions within the project area and determine appropriate test boring locations and depths. The relevant test boring locations are shown on Figure A-1, Test Boring Location Map, and selected previous test boring logs are presented in Appendix E, Supplemental Soils Information.

5.2 Field Exploration

The test boring exploration for the Institutional Corridor Piped Water System project was conducted on February 19 through the 22, 2015. Ten test borings were drilled, sampled, and logged to depths of 21.5 feet along the proposed pipe alignment.

The test borings were located in the field by a handheld Global Positioning system (GPS) and their measured distance to property lines, and are only as accurate as the method implies. The locations of the test borings are shown on Figure A-1, Test Boring Location Map, located in Appendix A.

The test borings were drilled utilizing a CME-45, skid-mounted drill rig mounted on a nodwell carrier and fitted with continuous-flight, hollow-stem auger. The rig is owned and operated by

Denali Drilling, Inc. of Anchorage, Alaska The drilling was supervised and the samples logged by Jillian Nicolazzo, EIT and Keri A. Nutter, CPG with our firm.

Disturbed samples were obtained at depths of 2.5, 5, 7.5, and 10 feet and then at 5-foot intervals thereafter using a standard split-spoon sampler. The Standard Penetration Test (SPT) was performed in the test borings by driving a 2.5-inch outside-diameter, split-spoon sampler a distance of 18 inches ahead of the auger with a 140-pound hammer falling 30 inches in accordance with ASTM Standard Test Method for Standard Penetration Test and Split-Barrel Sampling of Soils (D1586). The standard penetration resistance (N) value shown on the test boring logs indicates the number of blows required to drive the sampler the last 12 inches. The results are an indication of the relative density or consistency of the subsoil. The N-values shown in the logs are raw data from the field and have not been adjusted for sampling equipment type or overburden pressure. In frozen soils, the SPT values are highly influenced by ice content, ground temperature, and the presence of gravel.

As the soil samples were recovered, they were visually classified and sealed in plastic bags to preserve the natural water content. The samples were then transported to DOWL's laboratory in accordance with ASTM D4220, for further testing.

A sealed PVC standpipe was installed in each test boring. Following drilling and allowing the temperature to stabilize, a thermistor string was lowered into each pipe to measure the temperature.

Soil samples recovered above the water table near known areas of contamination were screened with a calibrated photo-ionization detector (PID) to determine if volatile organics were present. No evidence of gross contamination, such as odor or elevated PID readings was observed during drilling within the project area. No environmental testing was conducted as a part of this investigation.

6.0 LABORATORY TESTS

This section of the report presents the technical data obtained during the soil laboratory testing in narrative, tabular, and graphic form. The methods and procedures used in obtaining the data are

described herein. The data should be considered accurate only to the degree implied by the methods used.

The natural water content of all the recovered samples was measured. Grain size analyses and thaw consolidation testing was performed on selected samples.

Soil samples will be stored until September 2015, after which time they will be discarded unless other arrangements are made.

6.1 Moisture Content

The natural water content was determined in accordance with ASTM Standard Test Methods for Laboratory Determination of Water (Moisture) Content of Soil and Rock by Mass (D2216); except, due to limited sample sizes, some tests may have been performed on samples smaller than the minimum test size required by the standard. The water contents are reported on the graphic test boring logs, Appendix B.

6.2 Particle Size Distribution Tests

Six particle-size distribution tests were performed on selected soil samples in accordance with ASTM Standard Test Methods for Particle-Size Distribution (Gradation) of Soils Using Sieve Analysis (D6913). These tests consisted of mechanical sieving and the results are presented on the test boring logs and graphically in Appendix C, Laboratory Testing Results.

6.3 Limited Mechanical Analysis

Fourteen limited mechanical analyses were performed on selected soil samples. This test is the same as the particle size distribution test above, except the soil is only passed through the No. 4 and No. 200 sieves. Particles retained on the No. 4 sieve are reported as percent gravel. Particles passing the No. 4 sieve and retained on the No. 200 sieve are reported as percent sand. All particles passing the No. 200 sieve are reported as percent silt or clay. The results of the testing are shown in Table 3.

Table 2: Limited Mechanical Analysis Test Results

Test Boring No.	Sample No.	Depth (ft)	Gravel (%)	Sand (%)	Silt (%)	Group Name
1*	3	7.5 - 9	0	87	13	Silty SAND
1	5	15 - 16.5	0	60	40	Silty SAND
2	2	5 - 6.5	1	64	35	Silty SAND
2	6	20 - 21.5	0	92	8	Sand with Silt
3*	2	5 - 6.5	0	69	31	Silty SAND
3	5	15-16.5	0	92	8	Sand with Silt
5	2	5 - 6.5	0	96	4	SAND
5	5	15 - 16.5	0	79	21	Silty SAND
7*	1	0.5 - 2	7	73	20	Silty SAND
7	5	10 - 11.5	0	97	3	SAND
8	3	7.5 - 9	0	95	5	Sand with Silt
8	5	15 - 16.5	0	74	26	Silty SAND
9	4	10 - 11.5	0	95	5	Sand with Silt
9	6	20 - 21.5	0	90	10	Sand with Silt
10	5	10 - 11.5	0	95	5	Sand with Silt
10	7	20 - 21.5	0	83	17	Silty SAND
11*	1	1 - 2	8	72	20	Silty SAND
11	6	15 - 16.5	0	87	13	Silty SAND
12*	5	10 - 11.5	0	76	24	Silty SAND
12*	7	20 - 21.5	0	18	82	SILT with Sand

* Full Particle Size Distribution Performed. See Results in Appendix C

6.4 Thaw Consolidation Tests

Three thaw consolidation tests were performed on selected soil samples. The testing method was based on ASTM D2435, One-Dimensional Consolidation Properties of Soils. ASTM D2435 determines the magnitude and rate of consolidation of soil when it is retrained laterally and drained axially while under a load using load increments. The testing performed on these samples used a single load being applied rather than load increments to simple aid in obtaining deformation upon thawing in a short amount of time; usually 60 to 90 minutes, the time necessary to melt the ice present in the sample. The test does not measure the long-term consolidation or the amount of settlement which may occur under a load over a long period of time. The results of the Thaw Consolidation tests are presented in Table 4.

Table 3: Thaw Consolidation Test Results

Test Boring No.	Sample Number	Depth (ft)	Moisture Content (%)	Deformation on Thawing (%)
2	5	15 - 16.5	20	0
3	4	10 - 11.5	20	0
9	6	20 - 21.5	19	0

7.0 REFERENCES

Alaska Department of Transportation & Public Facilities. (2005). *Chief Eddie Hoffman Highway Rehabilitation and Separated Pathway, Project No. 53927, Bethel, Alaska*. ADOT&PF Central Region Materials, Anchorage, Alaska. 97p.

DOWL. (1972). *Bethel Comprehensive Community Health Center, Bethel, Alaska*. DOWL Report No. 1069. DOWL (formerly ACLW Consulting Engineers), Anchorage, Alaska. 31p.

DOWL. (1994). *Draft Yukon-Kuskokwim Health Center, Bethel, Alaska.* DOWL Report No. 3783. Anchorage, Alaska. 28p.

DOWL. (1994). *Yukon-Kuskokwim Health Center, Bethel, Alaska.* DOWL Report No. 3489. Anchorage, Alaska. 55p

Hartman, C.W. and Johnson, P.R. (1984). *Environmental Atlas of Alaska*. Second Edition. Revised. Fairbanks, Alaska: Institute of Water Resources, University of Alaska, Fairbanks, 95p.

Pewe, T.L. (1975). *Quaternary Geology of Alaska, U.S. Geological Survey, Professional Paper 835*. Washington, D.C.: United States Government Printing Office, 145p., One map, Two tables in pocket.

Wahrhaftig, Clyde. (1965). *Physiographic Divisions of Alaska, US Geological Survey Professional Paper 482*. Washington, D.C.: United States Government Printing Office, 52p., Six plates.

APPENDIX A

TEST BORING LOCATION MAP

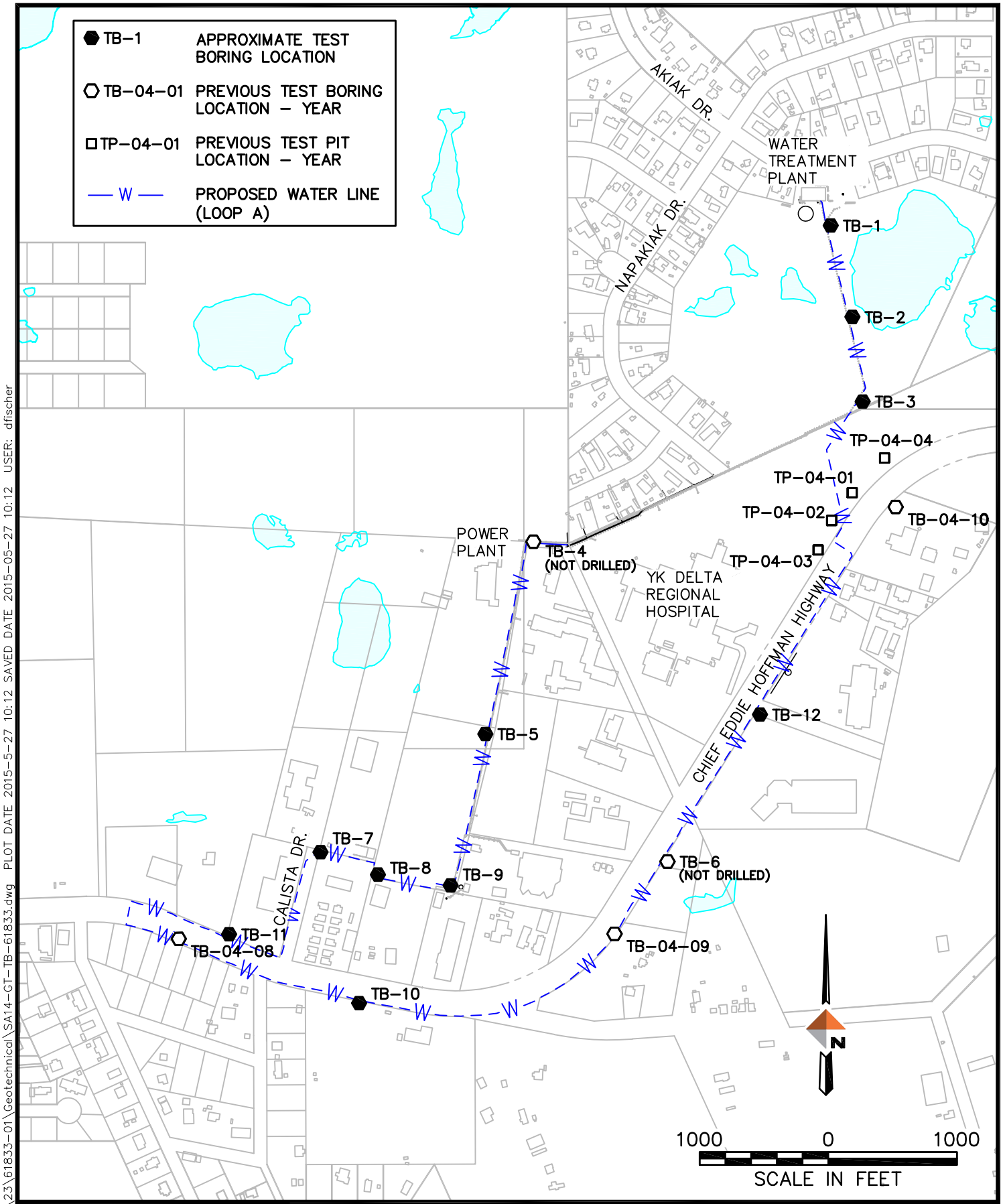

DOWL
WWW.DOWL.COM

Test Boring Location Map
INSTITUTIONAL CORRIDOR PIPED WATER SYSTEM
Bethel, Alaska

PROJECT	61833
DATE	05/27/2015

FIGURE A-1

C:\Civil 3D Projects\23\61833-01\Geotechnical\SA14-GT-TB-61833.dwg PLOT DATE 2015-5-27 10:12 SAVED DATE 2015-05-27 10:12 USER: dfischer

APPENDIX B

TEST BORING LOGS AND DESCRIPTIVE GUIDE

TEST BORING 1

LOCATION: SEE TEST BORING LOCATION MAP
ELEVATION:
SURFACE: Willow, grass, tundra

Other Tests	Temp °F	Moisture Content (%)	Blows / Foot	Sample No.	Sample Type	Soil Class	Frost Class	DEPTH	Description
						PT	F4		**PEAT**, brown, fibrous, **FROZEN, ICE AS Nbe**
								3.0	
	32.0	64	4	1		SM	F2		**SILTY SAND**, brown, about 15% silt, nonplastic, medium sand, wet, loose, trace of **ORGANICS** (rootlets)
								4.5	
	35.2	21	12	2			F2		**SILTY SAND**, gray, about 15% silt, nonplastic, fine sand, wet to saturated, medium dense, Auger sinking. Sampler full with heave; blow counts may not be representative
MA		18	13	3					
	36.0	25	11	4					Groundwater encountered at 12' while drilling
						SM			
									becoming siltier, about 40% silt
LMA	37.6	23	18	5					
									FROZEN, ICE AS Nbe
	32.0	31	24	6					
								21.5	

DEPTH (FEET): 0, 5, 10, 15, 20, 25

TD=21.5'

TEST BORING COMPLETED ON 2-20-15
THERMISTOR STANDPIPE INSTALLED TO 21.5'

KEY
MA = Mechanical Analysis
LMA = Limited Mechanical Analysis
TD = Total Depth
□ = Grab Sample
◪ = SPT Sample
Ⓢ = Shelby Tube - pushed
⊡ = Direct Push Sample
⊠ = 2.5" I.D. Spoon Sample
340# weight, 30" fall

DRILLING CO.: Denali Drilling, Inc.
EQUIPMENT: CME-45, Skid mounted
OPERATOR: Tony Jennison
METHOD: 6 in. OD hollow-stem auger

CLIENT: City of Bethel
PROJECT: Bethel Institutional Corridor
LOGGED BY: Jillian A. Nicolazzo, E.I.
TEST BORING COMPLETED: 2-20-15
W.O. 1123.61833.01

DOWL

LOG OF TEST BORING 1

FIGURE B-1

TEST BORING 2

LOCATION: SEE TEST BORING LOCATION MAP
ELEVATION:
SURFACE: Tundra

Other Tests	Moisture Content (%)	Blows / Foot	Sample No.	Sample Type	Soil Graph	Soil Class	Frost Depth	Frost Class	Description	DEPTH
						PT		F4	**PEAT**, dark brown, fibrous, **FROZEN, ICE AS Nbn**	1.0
	75	5	1			SM		F4	**SILTY SAND**, brown, about 35% silt, fine sand, wet, loose, **FROZEN, ICE AS Nbn**	4.5
LMA	457	13	2			PT		F4	**PEAT**, dark brown, **FROZEN, ICE AS Nbe**	8.5
	69		3							
	25	19	3A			SP SM		F2	**POORLY GRADED SAND WITH SILT**, gray, about 10-15% silt, fine to medium sand, **FROZEN, ICE AS Vc**	10.5
	28		4							
	56	16	4A			PT		F4	**PEAT**, brown, amorphous, **FROZEN, ICE AS Vx, to ~25% by volume**	13.5
	20	74	5			SP SM		F2	**POORLY GRADED SAND WITH SILT**, dark gray, about 10% silt, fine to medium sand, **FROZEN, ICE AS Nbn**	
LMA	20	87	6						TD=21.5'	21.5

DEPTH (FEET): 0, 5, 10, 15, 20, 25

TEST BORING COMPLETED ON 2-19-15
NO GROUNDWATER ENCOUNTERED WHILE DRILLING
THERMISTOR STANDPIPE INSTALLED TO 21.5'

KEY
LMA = Limited Mechanical Analysis
TD = Total Depth
□ = Grab Sample
◪ = SPT Sample
Ⓢ = Shelby Tube - pushed
Ⓣ = Direct Push Sample
⧗ = 2.5" I.D. Spoon Sample
340# weight, 30" fall

DRILLING CO.: Denali Drilling, Inc.
EQUIPMENT: CME-45, Skid mounted
OPERATOR: Tony Jennison
METHOD: 6 in. OD hollow-stem auger

CLIENT: City of Bethel
PROJECT: Bethel Institutional Corridor
LOGGED BY: Keri A. Nutter, CPG
TEST BORING COMPLETED: 2-19-15
W.O. 1123.61833.01

DOWL

LOG OF TEST BORING 2

FIGURE B-2

TEST BORING 3

LOCATION: SEE TEST BORING LOCATION MAP
ELEVATION:
SURFACE: Grass/tundra

Other Tests	Temp °F	Moisture Content (%)	Blows / Foot	Sample No.	Sample Type	Soil Graph	Soil Class	Frost Depth	Frost Class	DEPTH	
							PT		F4		**PEAT**, dark brown, fibrous, **FROZEN, ICE AS Vs**, ~5-10% by volume
	32.0	284	42	1						3.0	
		22		1A							**FROZEN, ICE AS Vx** ~5-10% to 6'
MA	31.9	22	34	2			SM/ML		F2 to F3		brown, **POORLY GRADED SAND WITH SILT INTERBEDDED WITH SANDY SILT**, gray, about 10-30% silt, nonplastic, fine sand, **FROZEN, ICE AS Nbn**
	32.2	20	42	3							
	32.1	20	68	4						12.5	
LMA	32.2	16	62	5			SM		F3		**SILTY SAND**, brown, about 30% silt, nonplastic, fine to medium sand, **FROZEN, ICE AS Nbn**
	32.2	18 / 18	78	6 / 6A						21.5	

DEPTH (FEET): 0, 5, 10, 15, 20, 25

TD=21.5'

TEST BORING COMPLETED ON 2-20-15
NO GROUNDWATER ENCOUNTERED WHILE DRILLING
THERMISTOR STANDPIPE INSTALLED TO 21.5'

KEY
MA = Mechanical Analysis
LMA = Limited Mechanical Analysis
TD = Total Depth
□ = Grab Sample
◪ = SPT Sample
S = Shelby Tube - pushed
T = Direct Push Sample
⊠ = 2.5" I.D. Spoon Sample 340# weight, 30" fall

DRILLING CO.: Denali Drilling, Inc.
EQUIPMENT: CME-45, Skid mounted
OPERATOR: Tony Jennison
METHOD: 6 in. OD hollow-stem auger

CLIENT: City of Bethel
PROJECT: Bethel Institutional Corridor
LOGGED BY: Jillian A. Nicolazzo, E.I.
TEST BORING COMPLETED: 2-20-15
W.O. 1123.61833.01

DOWL

LOG OF TEST BORING 3

FIGURE B-3

TEST BORING 5

LOCATION: SEE TEST BORING LOCATION MAP
ELEVATION:
SURFACE: Tundra

Other Tests	Temp °F	Moisture Content (%)	Blows / Foot	Sample No.	Sample Type	Soil Graph	Soil Class	Frost Depth	Frost Class	Description	DEPTH
							PT		F4	**PEAT**, brown, fibrous, **FROZEN, ICE AS Nbn**	
											2.0
		53	8	1			SP SM		F2	**POORLY GRADED SAND WITH SILT**, light gray-light tan, about 5-10% silt, fine to medium sand, **FROZEN, ICE AS Nf**	
											4.5
LMA		6	10	2			SP		NFS	**POORLY GRADED SAND**, reddish brown, about 0-5% silt, fine to medium sand, **FROZEN, ICE AS Nf**	
											8.0
		19	21	3					F2 to F3	**SILTY SAND**, gray, about 15-20% silt, fine to medium sand, **FROZEN, ICE AS Nf**	
	32.2	23	47	4							
							SM				
LMA	32.3	21	47	5							
	32.4	22	57	6							
						TD=21.5'					21.5

DEPTH (FEET): 0, 5, 10, 15, 20, 25

TEST BORING COMPLETED ON 2-21-15
NO GROUNDWATER ENCOUNTERED WHILE DRILLING
THERMISTOR STANDPIPE INSTALLED TO 21.5'

KEY
LMA = Limited Mechanical Analysis
TD = Total Depth
□ = Grab Sample
◪ = SPT Sample
S = Shelby Tube - pushed
T = Direct Push Sample
⧗ = 2.5" I.D. Spoon Sample 340# weight, 30" fall

DRILLING CO.: Denali Drilling, Inc.
EQUIPMENT: CME-45, Skid mounted
OPERATOR: Tony Jennison
METHOD: 6 in. OD hollow-stem auger

CLIENT: City of Bethel
PROJECT: Bethel Institutional Corridor
LOGGED BY: Jillian A. Nicolazzo, E.I.
TEST BORING COMPLETED: 2-21-15
W.O. 1123.61833.01

DOWL

LOG OF TEST BORING 5

FIGURE B-4

TEST BORING 7

LOCATION: SEE TEST BORING LOCATION MAP
ELEVATION:
SURFACE: GRAVEL PAD

Other Tests	Temp °F	Moisture Content (%)	Blows / Foot	Sample No.	Sample Type	Soil Graph	Soil Class	Frost Depth	Frost Class	Description	Depth
MA		18		1			SM		F2	**FILL**, **SILTY SAND**, gray, about 5-10% gravel, 20% silt, 1/2", fine-medium sand, **FROZEN, ICE AS Nbn**	
	30.2	14		2							3.0
		84	61	2A			PT		F4	**PEAT**, brown, fibrous, **FROZEN, ICE AS Nbn**	
	30.0	18		3							5.0
		5	28	3A					NFS	**POORLY GRADED SAND**, gray, about 0-5% silt, fine-medium sand, wet to saturated, medium dense, **FROZEN, ICE AS Nf** to 7'	
		15	16	4							
										Groundwater encountered at 10' while drilling	
LMA	34.2	20	13	5							
							SP				
		18	16	6						Auger sinking. Sampler full with heave - blow counts may not be representative	
		20	13	7							21.5

DEPTH (FEET): 0, 5, 10, 15, 20, 25

TD=21.5'

TEST BORING COMPLETED ON 2-21-15
THERMISTOR STANDPIPE INSTALLED TO 21.5'

KEY
MA = Mechanical Analysis
LMA = Limited Mechanical Analysis
TD = Total Depth
□ = Grab Sample
◪ = SPT Sample
Ⓢ = Shelby Tube - pushed
⊡ = Direct Push Sample
⊠ = 2.5" I.D. Spoon Sample
340# weight, 30" fall

DRILLING CO.: Denali Drilling, Inc.
EQUIPMENT: CME-45, Skid mounted
OPERATOR: Tony Jennison
METHOD: 6 in. OD hollow-stem auger

CLIENT: City of Bethel
PROJECT: Bethel Institutional Corridor
LOGGED BY: Jillian A. Nicolazzo, E.I.
TEST BORING COMPLETED: 2-21-15
W.O. 1123.61833.01

DOWL

LOG OF TEST BORING 7

FIGURE B-5

TEST BORING 8

LOCATION: SEE TEST BORING LOCATION MAP
ELEVATION:
SURFACE: Grass, willows

Other Tests	Moisture Content (%)	Blows / Foot	Sample No.	Sample Type	Soil Graph	Soil Class	Frost Depth	Frost Class	DEPTH	
									0	3" **ORGANIC** mat
								F2		**POORLY GRADED SAND WITH SILT**, gray, about 5-10% silt, fine sand, saturated, loose, Sampler full from heave - blow counts may not be representative
	95	2	1							no sample recovered, grab sample obtained
										Groundwater encountered at 4' while drilling
	21	9	2			SP SM			5	
LMA	19	8	3							
	19	9	4						10	
									14.0	
								F3	15	**SILTY SAND**, gray, about 25% silt, fine sand, saturated, medium dense
LMA	21	28	5							
						SM				
									20	trace of in situ **ORGANICS**, **FROZEN, ICE AS Nbn**
	27	26	6							
							TD=21.5'		21.5	
									25	

DEPTH (FEET)

TEST BORING COMPLETED ON 2-20-15
THERMISTOR STANDPIPE INSTALLED TO 21.5'

KEY
LMA = Limited Mechanical Analysis
TD = Total Depth
□ = Grab Sample
◪ = SPT Sample
Ⓢ = Shelby Tube - pushed
↑ = Direct Push Sample
⧗ = 2.5" I.D. Spoon Sample
340# weight, 30" fall

DRILLING CO.: Denali Drilling, Inc.
EQUIPMENT: CME-45, Skid mounted
OPERATOR: Tony Jennison
METHOD: 6 in. OD hollow-stem auger

CLIENT: City of Bethel
PROJECT: Bethel Institutional Corridor
LOGGED BY: Jillian A. Nicolazzo, E.I.
TEST BORING COMPLETED: 2-20-15
W.O. 1123.61833.01

DOWL

LOG OF TEST BORING 8

FIGURE B-6

TEST BORING 9

LOCATION: SEE TEST BORING LOCATION MAP
ELEVATION:
SURFACE: Grass, tundra

Other Tests	Temp °F	Moisture Content (%)	Blows / Foot	Sample No.	Sample Type	Soil Graph	Soil Class	Frost Depth	Frost Class	DEPTH	
							PT		F4		**PEAT**, dark brown, fibrous, **FROZEN, ICE AS Vs**
		70	4	1							
										4.5	
									F2		**POORLY GRADED SAND WITH SILT**, gray, about 5-10% silt, fine to medium sand, wet, loose
	32.6	9	5	2							
	34.2	15	7	3							
											Groundwater encountered at 10' while drilling
LMA		19	11	4							mottled gray/brown, saturated, trace of in situ **ORGANICS** (rootlets)
							SP/SM				
	32.0	24	28	5							**FROZEN, ICE AS Nbn**
LMA		19	55	6						21.5	

DEPTH (FEET): 0, 5, 10, 15, 20, 25

TD=21.5'

TEST BORING COMPLETED ON 2-21-15
THERMISTOR STANDPIPE INSTALLED TO 21.5'

KEY
LMA = Limited Mechanical Analysis
TD = Total Depth
□ = Grab Sample
◪ = SPT Sample
Ⓢ = Shelby Tube - pushed
⊡ = Direct Push Sample
⧗ = 2.5" I.D. Spoon Sample 340# weight, 30" fall

DRILLING CO.: Denali Drilling, Inc.
EQUIPMENT: CME-45, Skid mounted
OPERATOR: Tony Jennison
METHOD: 6 in. OD hollow-stem auger

CLIENT: City of Bethel
PROJECT: Bethel Institutional Corridor
LOGGED BY: Jillian A. Nicolazzo, E.I.
TEST BORING COMPLETED: 2-21-15
W.O. 1123.61833.01

DOWL

LOG OF TEST BORING 9

FIGURE B-7

TEST BORING 10

LOCATION: SEE TEST BORING LOCATION MAP
ELEVATION:
SURFACE: Gravel Pad

Other Tests	Temp °F	Moisture Content (%)	Blows / Foot	Sample No.	Sample Type	Soil Graph	Soil Class	Frost Depth	Frost Class	DEPTH
		18		1			SP SM		NFS	**FILL**, **POORLY GRADED SAND WITH SILT AND GRAVEL**, gray, about 30% gravel, 10% silt, gravel subrounded to rounded to 3/4", medium sand, **FROZEN, ICE AS Nbn**
	28.9	9	63	2					NFS	**POORLY GRADED SAND**, mottled brown/gray, about 5% silt, medium sand, damp, loose to medium dense, **FROZEN, ICE AS Nf** to 5'
	30.5	5	37	3						
	34.5	10	11	4			SP			
LMA	35.3	18	9	5						
	36.1	12	14	6			SM		F2	**SILTY SAND**, mottled brown/gray, about 15-20% silt, fine sand, damp, medium dense, trace of **ORGANICS** (twigs)
LMA	38.0	12	11	7						

DEPTH (FEET): 0, 5, 10, 15, 20, 25

2.5

14.0

21.5

TD=21.5'

TEST BORING COMPLETED ON 2-22-15
NO GROUNDWATER ENCOUNTERED WHILE DRILLING
THERMISTOR STANDPIPE INSTALLED TO 21.5'

KEY
LMA = Limited Mechanical Analysis
TD = Total Depth
□ = Grab Sample
◪ = SPT Sample
S = Shelby Tube - pushed
I = Direct Push Sample
⊠ = 2.5" I.D. Spoon Sample 340# weight, 30" fall

DRILLING CO.: Denali Drilling, Inc.
EQUIPMENT: CME-45, Skid mounted
OPERATOR: Tony Jennison
METHOD: 6 in. OD hollow-stem auger

CLIENT: City of Bethel
PROJECT: Bethel Institutional Corridor
LOGGED BY: Jillian A. Nicolazzo, E.I.
TEST BORING COMPLETED: 2-22-15
W.O. 1123.61833.01

DOWL

LOG OF TEST BORING 10

FIGURE B-8

LOG OF EXPLORATION 61833.GPJ BLANK2.GDT 6/22/15

TEST BORING 11

LOCATION: SEE TEST BORING LOCATION MAP
ELEVATION:
SURFACE:

Other Tests	Temp °F	Moisture Content (%)	Blows / Foot	Sample No.	Sample Type	Soil Class	Frost Class	Description	Depth
							F1	**FILL**, **SILTY SAND**, gray, 8% gravel, 20% silt, gravel subrounded to rounded to 3/4", fine-medium sand, **FROZEN, ICE AS Nf**	
MA		18		1		SM			
		19	91/9"	2		SM	F3	**FILL**, **SILTY SAND**, dark brown, about 30% silt, fine-medium sand, trace of **ORGANICS** (roots), sampler refusal; move 4' northwest, redrill	2.5
		13		2A					4.0
						SM	F3	**FILL**, **SILTY SAND**, mottled gray/brown, about 30% silt, fine-medium sand, loose, trace of **ORGANICS** (roots)	
	33.8	50	7	3					
		57		3A		PT	F4	**PEAT**, dark brown, soft	6.0
									7.0
	34.6	9	11	4					
	36.0	6	10	5			F2	**SILTY SAND**, mottled gray/brown, about 15-20% silt, nonplastic, fine-medium sand, wet, loose, Groundwater encountered at 10' while drilling	
						SM			
LMA	38.4	7	15	6					
	35.4	24	11	7					21.5

DEPTH (FEET): 0, 5, 10, 15, 20, 25

TD=21.5'

TEST BORING COMPLETED ON 2-22-15
NO GROUNDWATER ENCOUNTERED WHILE DRILLING
THERMISTOR STANDPIPE INSTALLED TO 21.5'

KEY
MA = Mechanical Analysis
LMA = Limited Mechanical Analysis
TD = Total Depth
□ = Grab Sample
◪ = SPT Sample
S = Shelby Tube - pushed
D = Direct Push Sample
⊠ = 2.5" I.D. Spoon Sample 340# weight, 30" fall

DRILLING CO.: Denali Drilling, Inc.
EQUIPMENT: CME-45, Skid mounted
OPERATOR: Tony Jennison
METHOD: 6 in. OD hollow-stem auger

CLIENT: City of Bethel
PROJECT: Bethel Institutional Corridor
LOGGED BY: Jillian A. Nicolazzo, E.I.
TEST BORING COMPLETED: 2-22-15
W.O. 1123.61833.01

DOWL

LOG OF TEST BORING 11

FIGURE B-9

TEST BORING 12

LOCATION: SEE TEST BORING LOCATION MAP
ELEVATION:
SURFACE:

Other Tests	Temp °F	Moisture Content (%)	Blows / Foot	Sample No.	Sample Type	Soil Class	Frost Class	Description	Depth
							F2	**FILL**, **SILTY SAND WITH GRAVEL**, gray, about 20% gravel, 30% silt, **FROZEN, ICE AS Nbn**	
		18		1		SM			
	31.0	21	37	2					
		87		2A		PT	F4	**PEAT**, dark brown, fibrous, **FROZEN, ICE AS Nbn**	3.0
									4.0
	33.0	14	7	3			F2	**SILTY SAND**, mottled gray/brown, about 20-30% silt, fine sand, wet to saturated, trace of **ORGANICS** (rootlets), Groundwater encountered at 7.5' while drilling	
	35.5	7	16	4					
MA	35.5	6	14	5		SM			
	35.1	13	15	6					
									18.0
						ML	F4	**SILT WITH SAND**, gray, 18% sand, fine sand, saturated	
MA	34.2	26	8	7					21.5

DEPTH (FEET): 0, 5, 10, 15, 20, 25

TD=21.5'

TEST BORING COMPLETED ON 2-22-15
THERMISTOR STANDPIPE INSTALLED TO 21.5'

KEY
MA = Mechanical Analysis
TD = Total Depth
□ = Grab Sample
◪ = SPT Sample
S = Shelby Tube - pushed
D = Direct Push Sample
⊠ = 2.5" I.D. Spoon Sample 340# weight, 30" fall

DRILLING CO.: Denali Drilling, Inc.
EQUIPMENT: CME-45, Skid mounted
OPERATOR: Tony Jennison
METHOD: 6 in. OD hollow-stem auger

CLIENT: City of Bethel
PROJECT: Bethel Institutional Corridor
LOGGED BY: Jillian A. Nicolazzo, E.I.
TEST BORING COMPLETED: 2-22-15
W.O. 1123.61833.01

DOWL

LOG OF TEST BORING 12

FIGURE B-10

APPENDIX C

LABORATORY TEST RESULTS

DOWL HKM

Client: City of Bethel
Project: Bethel Institutional Corridor Water
Work Order: D61883

Particle Size Distribution

ASTM D422

Location: Test Boring 1
Sample 3
Depth 7.5'-9'

Lab Number	2015-171
Received	3/3/2015
Reported	3/9/2015

Engineering Classification: **Silty Sand, SM**

Frost Classification: **Not Measured**

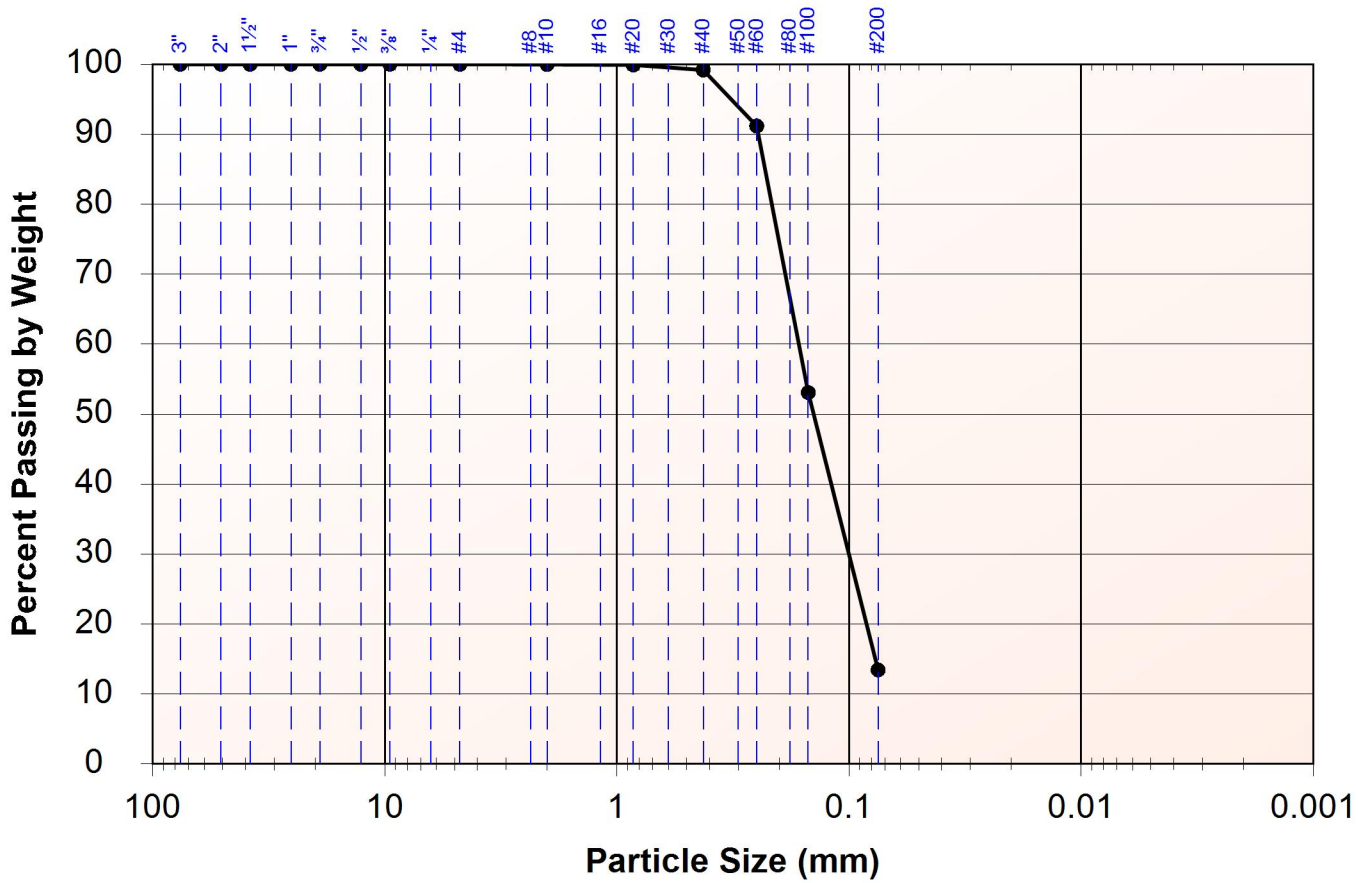

Size	Passing	Specification
3"	100%	
2"	100%	
1½"	100%	
1"	100%	
¾"	100%	
½"	100%	
⅜"	100%	
#4	100%	
Total Weight of Sample 1620.2g		
#10	100%	
#20	100%	
#40	99%	
#60	91%	
#100	53%	
#200	13.4%	
Total Weight of Fine Fraction 316.9g		

Maria E. Kampsen, P.E • 4041 B Street • Anchorage • Alaska • 99503 • 907/562-2000 • Fax 907/563-3953

DOWL HKM

Client: City of Bethel
Project: Bethel Institutional Corridor Water
Work Order: D61883

Particle Size Distribution

ASTM D422

Location: Test Boring 3
Sample 2
Depth 5'-6.5'

Lab Number	2015-175
Received	3/3/2015
Reported	3/9/2015

Engineering Classification: **Silty Sand, SM**

Frost Classification: **Not Measured**

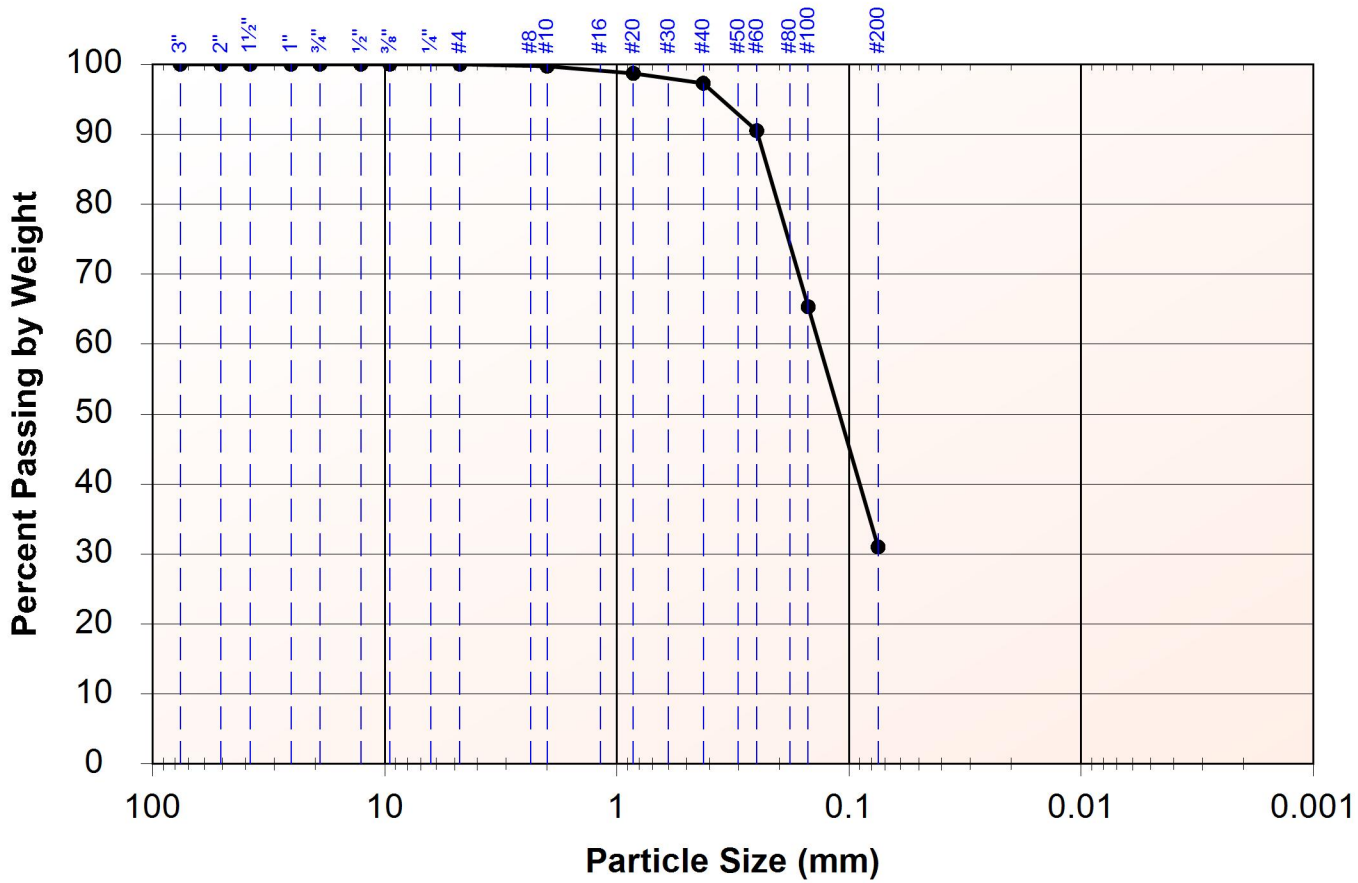

Size	Passing	Specification
3"	100%	
2"	100%	
1½"	100%	
1"	100%	
¾"	100%	
½"	100%	
⅜"	100%	
#4	100%	
Total Weight of Sample 352.8g		
#10	100%	
#20	99%	
#40	97%	
#60	91%	
#100	65%	
#200	31.0%	
Total Weight of Fine Fraction 352.8g		

Maria E. Kampsen, P.E • 4041 B Street • Anchorage • Alaska • 99503 • 907/562-2000 • Fax 907/563-3953

DOWL HKM

Client: City of Bethel
Project: Bethel Institutional Corridor Water
Work Order: D61883

Particle Size Distribution

ASTM D422

Location: Test Boring 7
Sample 1
Depth 0.5'-2'

Lab Number	2015-179
Received	3/3/2015
Reported	3/9/2015

Engineering Classification: **Silty Sand, SM**

Frost Classification: **Not Measured**

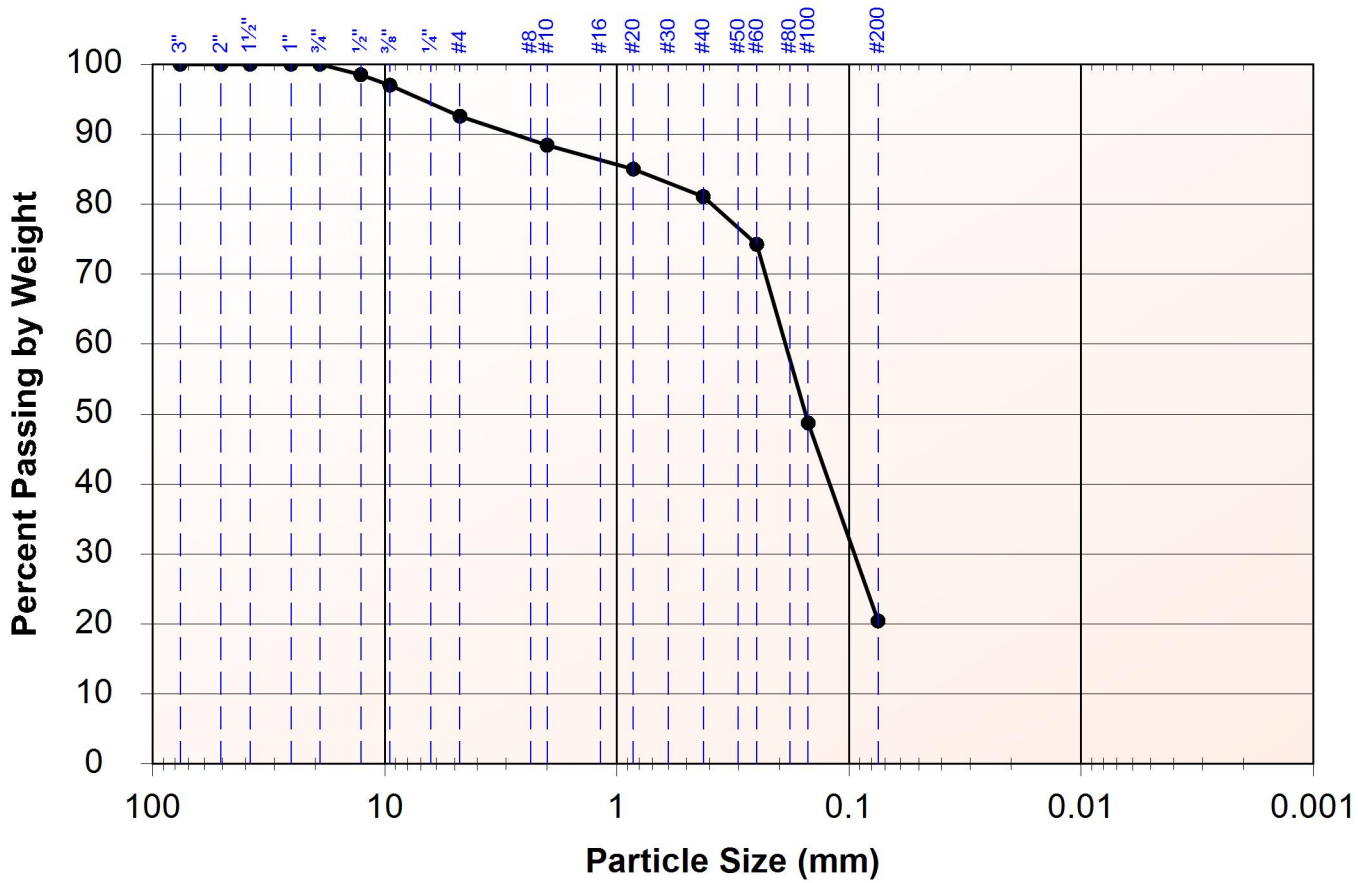

Size	Passing	Specification
3"	100%	
2"	100%	
1½"	100%	
1"	100%	
¾"	100%	
½"	98%	
⅜"	97%	
#4	93%	
Total Weight of Sample 5462.4g		
#10	88%	
#20	85%	
#40	81%	
#60	74%	
#100	49%	
#200	20.4%	
Total Weight of Fine Fraction 335.7g		

Maria E. Kampsen, P.E • 4041 B Street • Anchorage • Alaska • 99503 • 907/562-2000 • Fax 907/563-3953

DOWL HKM

Client: City of Bethel
Project: Bethel Institutional Corridor Water
Work Order: D61883

Particle Size Distribution

ASTM D422

Location: Test Boring 11
Sample 1
Depth 1'-2'

Lab Number	2015-187
Received	3/3/2015
Reported	3/9/2015

Engineering Classification: **Silty Sand, SM**

Frost Classification: **Not Measured**

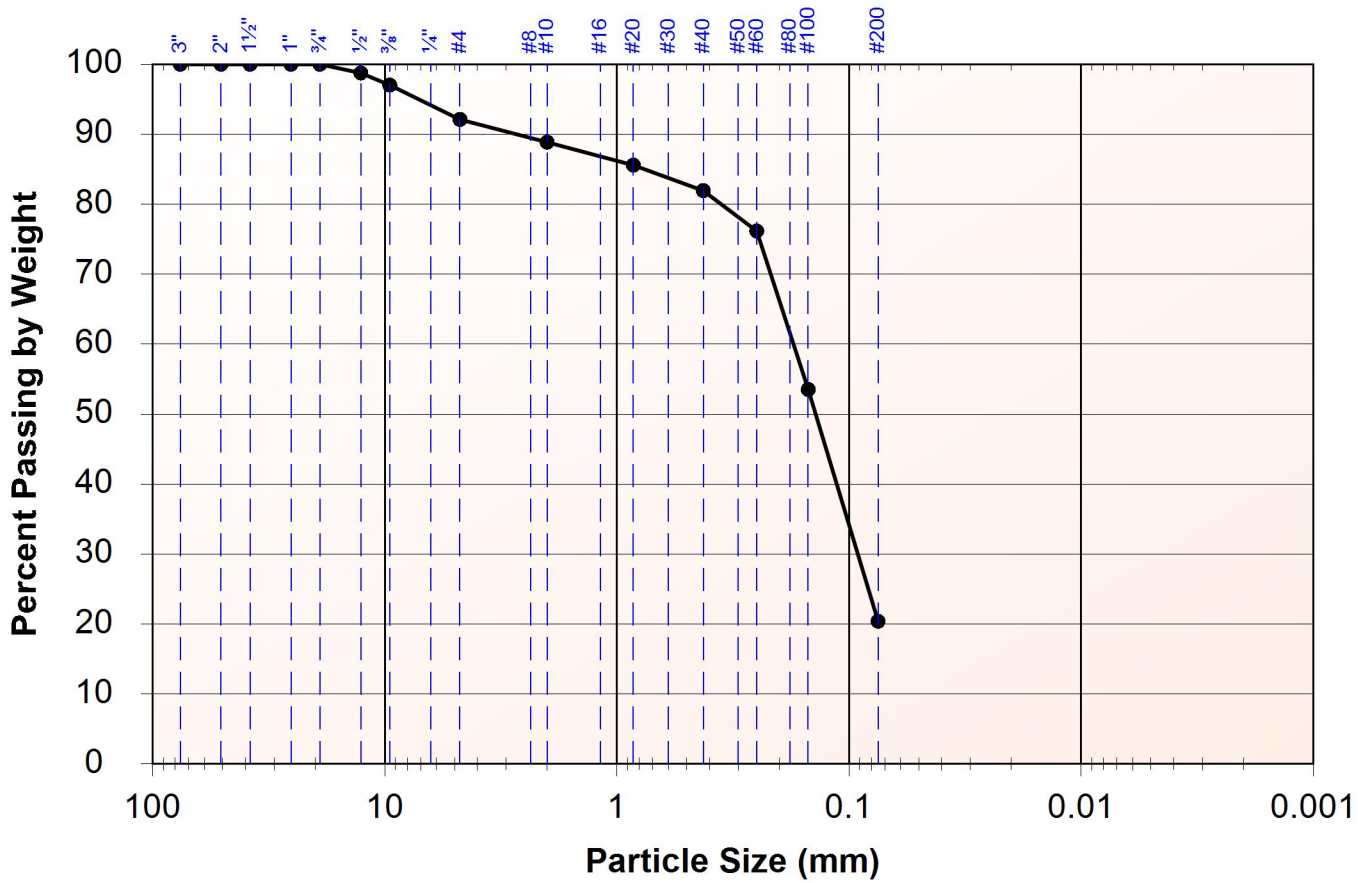

Size	Passing	Specification
3"	100%	
2"	100%	
1½"	100%	
1"	100%	
¾"	100%	
½"	99%	
⅜"	97%	
#4	92%	
Total Weight of Sample 2258.1g		
#10	89%	
#20	86%	
#40	82%	
#60	76%	
#100	54%	
#200	20.4%	
Total Weight of Fine Fraction 328.7g		

Maria E. Kampsen, P.E • 4041 B Street • Anchorage • Alaska • 99503 • 907/562-2000 • Fax 907/563-3953

DOWL HKM

Client: City of Bethel
Project: Bethel Institutional Corridor Water
Work Order: D61883

Particle Size Distribution

ASTM D422

Location: Test Boring 12
Sample 5
Depth 10'-11.5'

Lab Number	2015-189
Received	3/3/2015
Reported	3/9/2015

Engineering Classification: **Silty Sand, SM**

Frost Classification: **Not Measured**

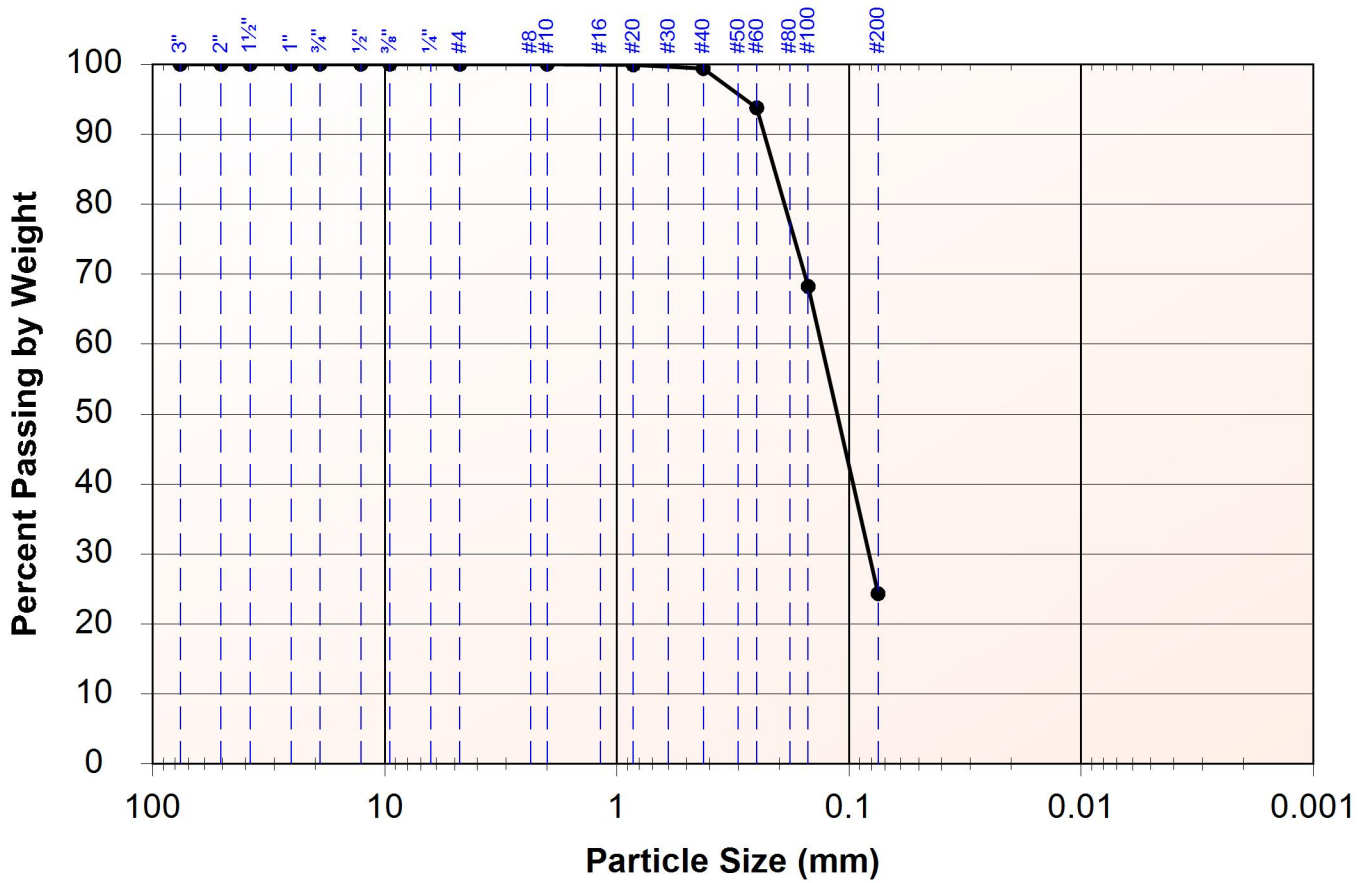

Size	Passing	Specification
3"	100%	
2"	100%	
1½"	100%	
1"	100%	
¾"	100%	
½"	100%	
⅜"	100%	
#4	100%	
Total Weight of Sample 1302.5g		
#10	100%	
#20	100%	
#40	99%	
#60	94%	
#100	68%	
#200	24.3%	
Total Weight of Fine Fraction 327.4g		

Maria E. Kampsen, P.E • 4041 B Street • Anchorage • Alaska • 99503 • 907/562-2000 • Fax 907/563-3953

DOWL HKM

Client: City of Bethel
Project: Bethel Institutional Corridor Water
Work Order: D61883

Particle Size Distribution

ASTM D422

Location: Test Boring 12
Sample 7
Depth 20'-21.5'

Lab Number	2015-190
Received	3/3/2015
Reported	3/9/2015

Engineering Classification: **Silt with Sand, ML**

Frost Classification: **F4**

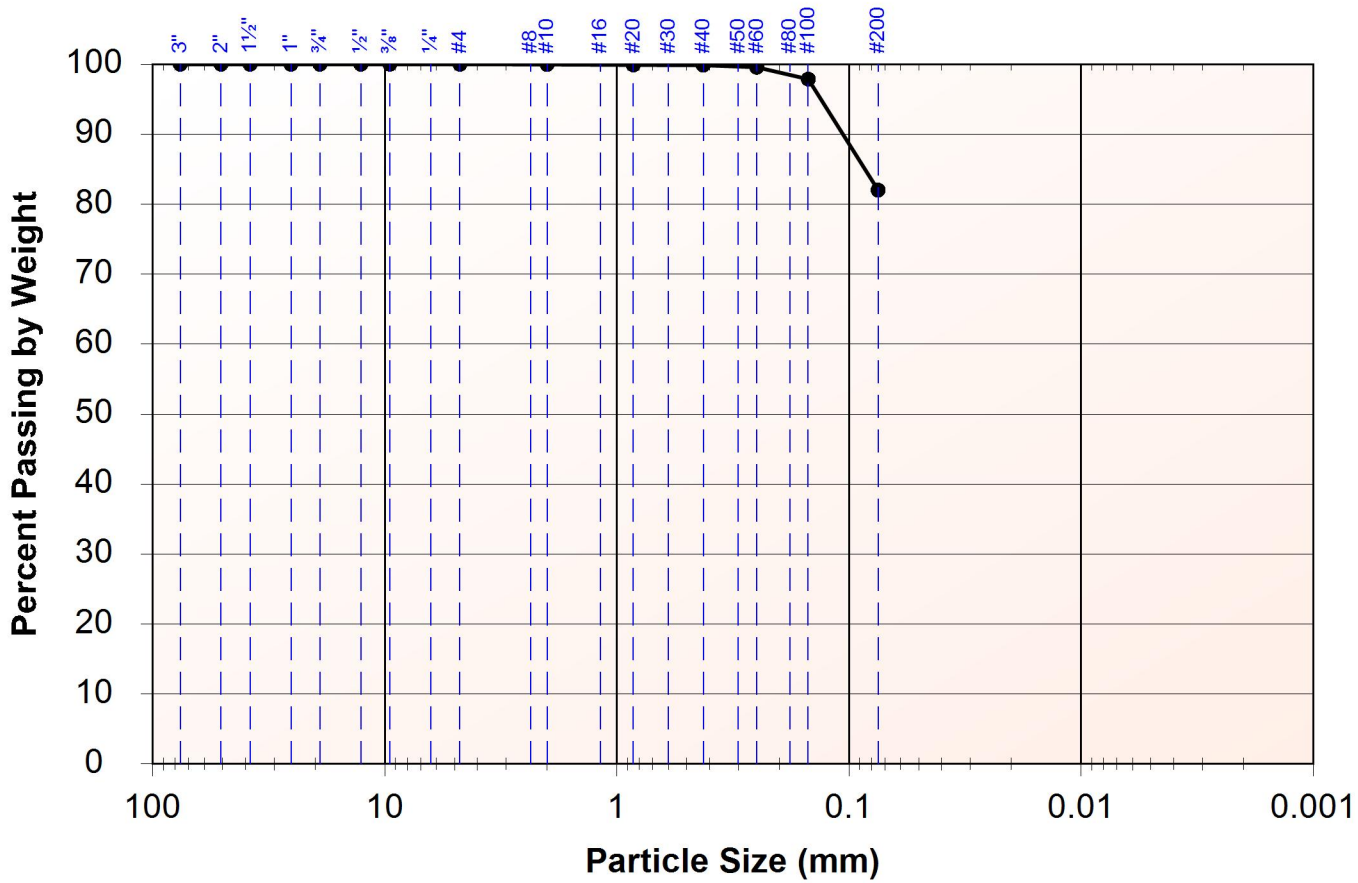

Size	Passing	Specification
3"	100%	
2"	100%	
1½"	100%	
1"	100%	
¾"	100%	
½"	100%	
⅜"	100%	
#4	100%	
Total Weight of Sample 1227.4g		
#10	100%	
#20	100%	
#40	100%	
#60	100%	
#100	98%	
#200	82.0%	
Total Weight of Fine Fraction 305.8g		

Maria E. Kampsen, P.E • 4041 B Street • Anchorage • Alaska • 99503 • 907/562-2000 • Fax 907/563-3953

APPENDIX D

THERMISTOR MEASUREMENTS

Project Name:	Bethel Institutional Corridor Piped Water
Client Name:	City of Bethel
DOWL Work Order:	1123.61833.01

Boring Number:	**1**	String Number:	06-2
Date of Reading:	2/22/2015	Air Temp (F):	34

Node No.	Depth ft	Resistance	Temperature (F)
6	0	15950	32.9
7	1.5	16430	31.8
8	5.5	16360	32.0
9	9.5	16290	32.1
10	13.5	16300	32.1
11	17.5	--	--
12	21.5	16450	31.8

Boring Number:	**2**	String Number:	06-2
Date of Reading:	2/23/2015	Air Temp (F):	27

Node No.	Depth ft	Resistance	Temperature (F)
6	0	17290	30.0
7	1.5	16800	31.0
8	5.5	--	--
9	9.5	16400	31.9
10	13.5	16380	31.9
11	17.5	--	--
12	21.5	16380	31.9

Boring Number:	**3**	String Number:	06-1
Date of Reading:	2/23/2015	Air Temp (F):	27

Node No.	Depth ft	Resistance	Temperature (F)
6	0	17890	28.8
7	1.5	16280	32.1
8	5.5	--	--
9	9.5	16350	32.0
10	13.5	16350	32.0
11	17.5	16350	32.0
12	21.5	16360	32.0

Boring Number:	**5**	String Number:	06-3
Date of Reading:	2/23/2015	Air Temp (F):	24

Node No.	Depth ft	Resistance	Temperature (F)
6	0	20760	23.7
7	1.5	16480	31.7
8	5.5	--	--
9	9.5	16420	31.8
10	13.5	16390	31.9
11	17.5	16410	31.9
12	21.5	16440	31.8

DOWL

Figure D-1

Project Name:	Bethel Institutional Corridor Piped Water
Client Name:	City of Bethel
DOWL Work Order:	1123.61833.01

Boring Number:	**7**	String Number:	06-1
Date of Reading:	2/22/2015	Air Temp (F):	34

Node No.	Depth ft	Resistance	Temperature (F)
6	0	15430	34.0
7	1.5	16290	32.1
8	5.5	16700	31.2
9	9.5	16340	32.0
10	13.5	16140	32.4
11	17.5	16140	32.4
12	21.5	16280	32.1

Boring Number:	**8**	String Number:	06-2
Date of Reading:	2/23/2015	Air Temp (F):	27

Node No.	Depth ft	Resistance	Temperature (F)
6	0	17290	30.0
7	1.5	16800	31.0
8	5.5	--	--
9	9.5	16400	31.9
10	13.5	16380	31.9
11	17.5	--	--
12	21.5	16380	31.9

Boring Number:	**9**	String Number:	06-1
Date of Reading:	2/23/2015	Air Temp (F):	24

Node No.	Depth ft	Resistance	Temperature (F)
6	0	21230	22.9
7	1.5	16660	31.3
8	5.5	16450	31.8
9	9.5	16510	31.6
10	13.5	16490	31.7
11	17.5	16480	31.7
12	21.5	16520	31.6

Boring Number:	**10**	String Number:	06-1
Date of Reading:	2/23/2015	Air Temp (F):	36

Node No.	Depth ft	Resistance	Temperature (F)
6	0	13780	38.1
7	1.5	16350	32.0
8	5.5	--	--
9	9.5	16070	32.6
10	13.5	15330	34.3
11	17.5	15070	34.9
12	21.5	15310	34.3

DOWL

Figure D-2

Project Name:	Bethel Institutional Corridor Piped Water
Client Name:	City of Bethel
DOWL Work Order:	1123.61833.01

Boring Number:	**11**	String Number:	06-3
Date of Reading:	2/23/2015	Air Temp (F):	36

Node No.	Depth ft	Resistance	Temperature (F)
6	0	15850	33.1
7	1.5	16340	32.0
8	5.5	16370	31.9
9	9.5	16220	32.3
10	13.5	15650	33.5
11	17.5	15760	33.3
12	21.5	16220	32.3

Boring Number:	**12**	String Number:	06-1
Date of Reading:	2/23/2015	Air Temp (F):	36

Node No.	Depth ft	Resistance	Temperature (F)
6	0	15370	34.2
7	1.5	16350	32.0
8	5.5	16380	31.9
9	9.5	16340	32.0
10	13.5	15930	32.9
11	17.5	15890	33.0
12	21.5	16210	32.3

DOWL

Figure D-3

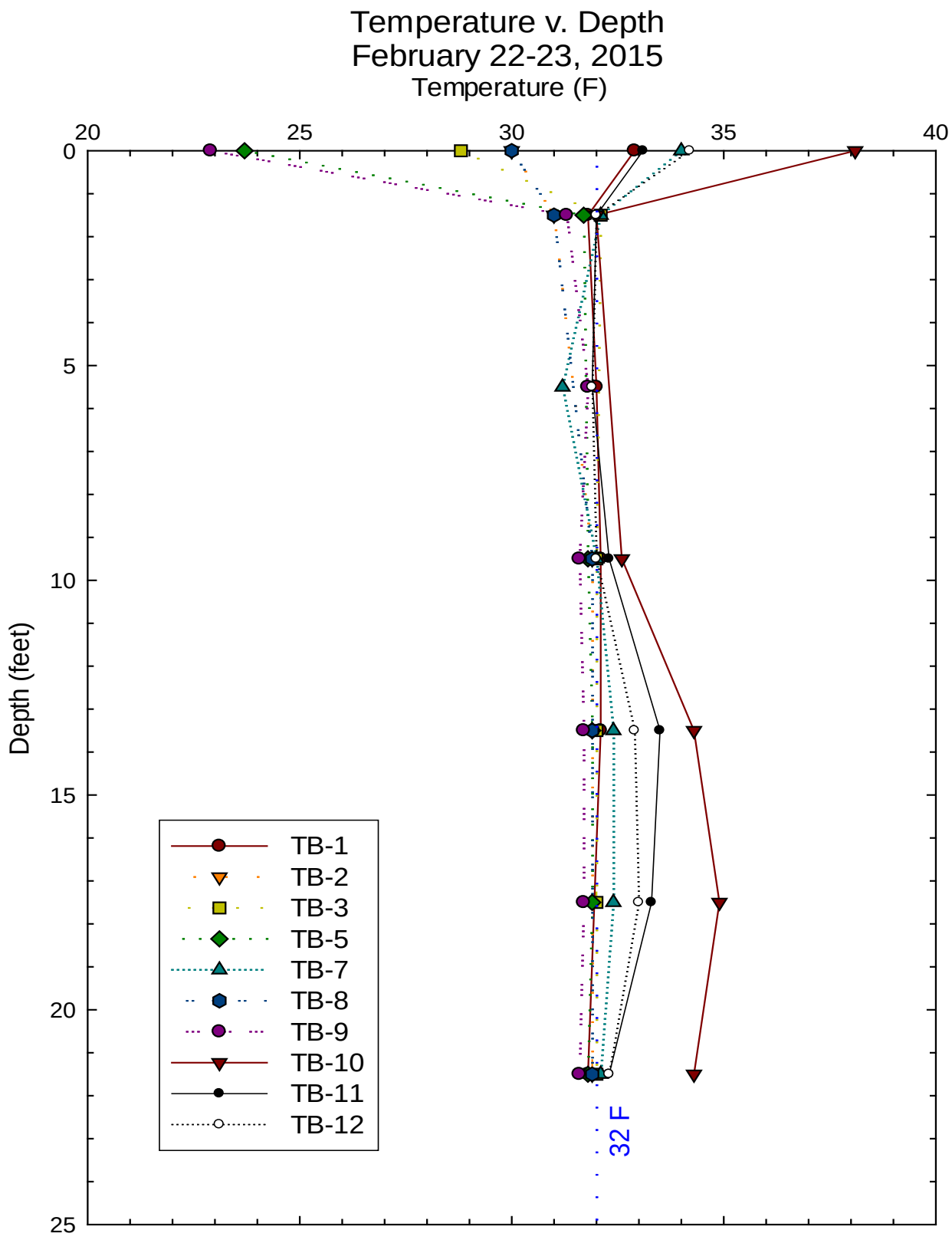

DOWL

Institutional Corridor Piped Water
Bethel, Alaska
Temperature-Depth Plot

Figure D-4

APPENDIX E

SUPPLEMENTAL SOILS INFORMATION

LOG OF TEST HOLE

HOLE # TH-04-08

STATE OF ALASKA DOT&PF
Central Region Materials
Geology Section

PROJECT NUMBER: *53927*
PROJECT: *Chief Eddie Hoffman Hwy and Separated Pathway*

Station / Location: *111+39*
Offset: *39' R HWY CL*
Elevation:

Equipment Type: *Mobile B-50*
Drilling Method: *Hollow-Stem Auger*
Field Crew: *G. Hamrick / J. Love*

Total Depth: *13.5 feet*
Date: *6/8/2004 - 6/8/2004*
Geologist: *C. Roso*

Weather: 70°

Ground Water Data		
Depth in (ft.)		
Time		
Date		
Symbol		

Depth (Feet)	Sample Type	Number	Blow Count	Sample	Recovery	N-Value	USCS Classification	Frozen Zone	Soil Graphic	SUBSURFACE MATERIAL	
0	GRAB	048					SW			**Asphalt Concrete** 2.5" thick	0.0
										SAND with Gravel (SW) Dark gray, dry, medium dense 048 Si=8%, Sa=52%, Gr=40%, Moisture=2.7%	0.2
1							SP			**SAND** (SP) very fine grained, Light gray, moist, medium dense	1.0
2	SPT	049	10 10 5	X							
3										**Insulation** 2" thick, Pink	3.3
							SP			**SAND** (SP) very fine grained, Light gray Reddish brown, moist, medium dense	3.5
4	SPT	050	8 14 13	X		27					
6	SPT	051	5 4 3	X							
7							OL			**Peat** (OL) fibrous, Reddish brown, moist to wet, soft	7.0
							SP			**SAND** (SP) Reddish brown, moist	7.8
8	SPT	052	4 3 4	X			OL			**SILTY Peat** (OL) interbeds of ice and sand, Dark reddish brown	8.5
9							OL			**SILT and PEAT interbeds** (OL) 2"-3" thick beds of silt, sand and peat, frozen peat, wet silt and sand, Dark reddish brown Dark gray, wet	9.5
10	SPT	053	3 4 5	X		9					
12	SPT	054	3 7 10	X		17					
13									BOH 13.5	Notes:	13.5

☐ CME Auto Hammer ☒ Cathead Rope Method ☒ 140 lb. hammer with 30 in. drop ☐ 340 lb. hammer with 30 in. drop

Sheet Number 1 of 1

A USCS LOG OF TEST HOLE CEHH2004.GPJ 2004TEMPLATE.GDT 1/10/05

LOG OF TEST HOLE

HOLE # TH-04-09

STATE OF ALASKA DOT&PF
Central Region Materials
Geology Section

PROJECT NUMBER: *53927*
PROJECT: *Chief Eddie Hoffman Hwy and Separated Pathway*

Station / Location: *129+9*
Offset: *10' R HWY CL*
Elevation:

Equipment Type: *Mobile B-50*
Drilling Method: *Hollow-Stem Auger*
Field Crew: *G. Hamrick / J. Love*

Total Depth: *13.5 feet*
Date: *6/8/2004 - 6/8/2004*
Geologist: *C. Roso*

Weather: 70°

Ground Water Data		
Depth in (ft.)		
Time		
Date		
Symbol		

Depth (Feet)	Sample Type	Number	Blow Count	Sample	Recovery	N-Value	USCS Classification	Frozen Zone	Soil Graphic	SUBSURFACE MATERIAL	
0										**Asphalt Concrete** 7" thick, 2 lifts	0.0
	GRAB	055					SW			**SAND with Gravel** (SW) Dark gray, dry, medium dense	0.6
1							SP			055 Si=8%, Sa=57%, Gr=35%, Moisture=4.2%	0.8
										SAND (SP) very fine grained, Light brown Light gray, moist, medium dense	
2			14								
3	SPT	NR	16			30					
			14								
4											
			8								
5	SPT	057	20				SP-SM			**SAND with Silt** (SP-SM) very fine grained, Light gray, moist	4.5
			23								5.5
6							SP			**SAND** (SP) Light gray, moist to wet, medium dense	
			16								
7	SPT	NR	17			37					
			20								
8											
			9								
9	SPT	059	9			18					
			9								9.5
10							OL			**PEAT and SILT interbeds** (OL) frozen with visible ice crystals, micaceous light gray silt, loose organics, Reddish brown Dark brown, moist to wet	
			4								
11	SPT	060	5			10					
			5								
12											12.0
			4				OL			**ORGANIC SILT** (OL) frozen with occasional large organic fragments, Dark brown	
13	SPT	061	5			11					
			6								13.5
									BOH 13.5	Notes:	

☐ CME Auto Hammer ☒ Cathead Rope Method ☒ 140 lb. hammer with 30 in. drop ☐ 340 lb. hammer with 30 in. drop

Sheet Number 1 of 1

A USCS LOG OF TEST HOLE CEHH2004.GPJ 2004TEMPLATE.GDT 1/10/05

LOG OF TEST HOLE

HOLE # TH-04-10

STATE OF ALASKA DOT&PF
Central Region Materials
Geology Section

PROJECT NUMBER: *53927*
PROJECT: *Chief Eddie Hoffman Hwy and Separated Pathway*

Station / Location: *153+14*
Offset: *6' R HWY CL*
Elevation:

Equipment Type: *Mobile B-50*
Drilling Method: *Hollow-Stem Auger*
Field Crew: *G. Hamrick / J. Love*

Total Depth: *9.5 feet*
Date: *6/8/2004 - 6/8/2004*
Geologist: *C. Roso*

Weather: 70°

Ground Water Data		
Depth in (ft.)		
Time		
Date		
Symbol		

Depth (Feet)	Sample Type	Number	Blow Count	Sample	Recovery	N-Value	USCS Classification	Frozen Zone	Soil Graphic	SUBSURFACE MATERIAL	
0	GRAB	062					SW			**Asphalt Concrete** 1" thick	0.0
										SAND with Gravel (SW) Dark gray, dry, medium dense 062 Si=6%, Sa=56%, Gr=38%, Moisture=3.3%	0.1
1											
2			15								2.5
3	SPT	063	17 15				SP			**SAND** (SP) very fine grained, Light gray, moist, dense	3.5
4							SP			**Insulation** 2" thick, Pink **SAND** (SP) very fine grained, Light gray, moist	3.6
			8								
5	SPT	NR	9 20			29					
6							PT			**Peat** (PT) frozen with visible ice layers, Dark brown Red, moist to wet	6.0
			15								
7	SPT	065	25 37			62					
8			16								
9	SPT	066	25 28			53			BOH 9.5	Notes:	9.5

☐ CME Auto Hammer ☒ Cathead Rope Method ☒ 140 lb. hammer with 30 in. drop ☐ 340 lb. hammer with 30 in. drop

Sheet Number 1 of 1

A USCS LOG OF TEST HOLE CEHH2004.GPJ 2004TEMPLATE.GDT 1/10/05

LOG OF TEST PIT

TESTPIT # TP-04-01

STATE OF ALASKA DOT&PF
Central Region Materials
Geology Section

PROJECT NUMBER: *53927*
PROJECT: *Chief Eddie Hoffman Hwy and Separated Pathway*

Station / Location: *151+58*
Offset: *46' L HWY CL*
Elevation:

Equipment Type: *Hitachi Garden Backhoe*
Hole Type: *Test Pit*
Field Crew: *Peter Hinz, Faulkner Walsh Const.*

Total Depth: *6.0 feet*
Date: *7/22/2001 - 7/22/2001*
Geologist: *C. Roso*

Ground Water Data		
Depth in (ft.)		
Time		
Date		
Symbol		

Weather: 65°

Depth (Feet)	Sample Type	Field Number	Sample	USCS Classification	Frozen Zone	Soil Graphic	SUBSURFACE MATERIAL	
0				SP			**SAND** (SP) (FILL), Light gray, dry to moist	0.0
1								
2								
3	GRAB	001		ML / OL			**SILT with Sand and ORGANICS** (ML / OL) Reddish brown, moist	3.0
				SP			**SAND** (SP) (NATIVE), Red Gray, moist	3.5
4								
5	GRAB	002						
6						BOH 6	Notes:	6.0

B USCS LOG OF TEST PIT CEHH2004.GPJ 2004TEMPLATE.GDT 1/10/05

LOG OF TEST PIT

TESTPIT # TP-04-02

STATE OF ALASKA DOT&PF
Central Region Materials
Geology Section

PROJECT NUMBER: *53927*
PROJECT: *Chief Eddie Hoffman Hwy and Separated Pathway*

Station / Location: *150+67*
Offset: *57' L HWY CL*
Elevation:

Equipment Type: *Hitachi Garden Backhoe*
Hole Type: *Test Pit*
Field Crew: *Peter Hinz, Faulkner Walsh Const.*

Total Depth: *5.0 feet*
Date: *7/22/2001 - 7/22/2001*
Geologist: *C. Roso*

Weather: 65°

Ground Water Data		
Depth in (ft.)		
Time		
Date		
Symbol		

Depth (Feet)	Sample Type	Field Number	Sample	USCS Classification	Frozen Zone	Soil Graphic	SUBSURFACE MATERIAL	
0				PT			**Vegetative Mat / Sod** (PT) fibrous, Reddish brown, moist	0.0
1				ML/MH			**SILT** (ML/MH) medium plasticity, Light gray, moist	1.0
2								
				ML			**SANDY SILT** (ML) frozen, Dark gray, wet, Vx	2.5
3	GRAB	003						
4	GRAB	004		SP			**SAND with Silt** (SP) semi frozen, Dark gray, moist to wet	4.3
5						BOH 5	Notes:	5.0

B USCS LOG OF TEST PIT CEHH2004.GPJ 2004TEMPLATE.GDT 1/10/05

LOG OF TEST PIT

TESTPIT # TP-04-03

STATE OF ALASKA DOT&PF
Central Region Materials
Geology Section

PROJECT NUMBER: *53927*
PROJECT: *Chief Eddie Hoffman Hwy and Separated Pathway*

Station / Location: *149+48*
Offset: *27' L HWY CL*
Elevation:

Equipment Type: *Hitachi Garden Backhoe*
Hole Type: *Test Pit*
Field Crew: *Peter Hinz, Faulkner Walsh Const.*

Total Depth: *7.0 feet*
Date: *7/22/2001 - 7/22/2001*
Geologist: *C. Roso*

Ground Water Data		
Depth in (ft.)		
Time		
Date		
Symbol		

Weather: 65°

Depth (Feet)	Sample Data: Sample Type	Field Number	Sample	USCS Classification Frozen Zone	Soil Graphic	SUBSURFACE MATERIAL	
0				SP		**SAND** (SP) (FILL), Light gray, dry	0.0
1							
2							2.2
				OL		**ORGANICS** (OL) Red, dry to moist	
3							3.5
				SM		**SILTY SAND** (SM) Reddish brown Gray, moist	
4							
5							5.5
				SP		**SAND** (SP) Red Gray, moist	
6							
7					BOH 7	Notes:	7.0

B USCS LOG OF TEST PIT CEHH2004.GPJ 2004TEMPLATE.GDT 1/10/05

LOG OF TEST PIT

TESTPIT # TP-04-04

STATE OF ALASKA DOT&PF
Central Region Materials
Geology Section

PROJECT NUMBER: *53927*
PROJECT: *Chief Eddie Hoffman Hwy and Separated Pathway*

Station / Location: *154+22*
Offset: *62' L HWY CL*
Elevation:

Equipment Type: *Hitachi Garden Backhoe*
Hole Type: *Test Pit*
Field Crew: *Peter Hinz, Faulkner Walsh Const.*

Total Depth: *6.0 feet*
Date: *7/22/2001 - 7/22/2001*
Geologist: *C. Roso*

Ground Water Data		
Depth in (ft.)		
Time		
Date		
Symbol		

Weather: 65°

Depth (Feet)	Sample Type	Field Number	Sample	USCS Classification	Frozen Zone	Soil Graphic	SUBSURFACE MATERIAL	
0				SP			**SAND** (SP) estimate 10% fine gravel (FILL), Light gray, moist	0.0
1								
2								
3								
4				SP			**SAND with Gravel** (SP) Dark gray, moist	4.0
				SP			**SAND** (SP) fine grained (FILL), Dark gray, moist	4.5
5	GRAB	005		PT			**Peat** (PT) fibrous, Reddish brown, moist to wet	5.0
6						BOH 6	Notes:	6.0

B USCS LOG OF TEST PIT CEHH2004.GPJ 2004TEMPLATE.GDT 1/10/05

GEOLOGY DATA REPORT

BETHEL
CHIEF EDDIE HOFFMAN HIGHWAY
REHABILITATION AND SEPARATED PATHWAY
PROJECT NUMBER 53927

JANUARY 2005

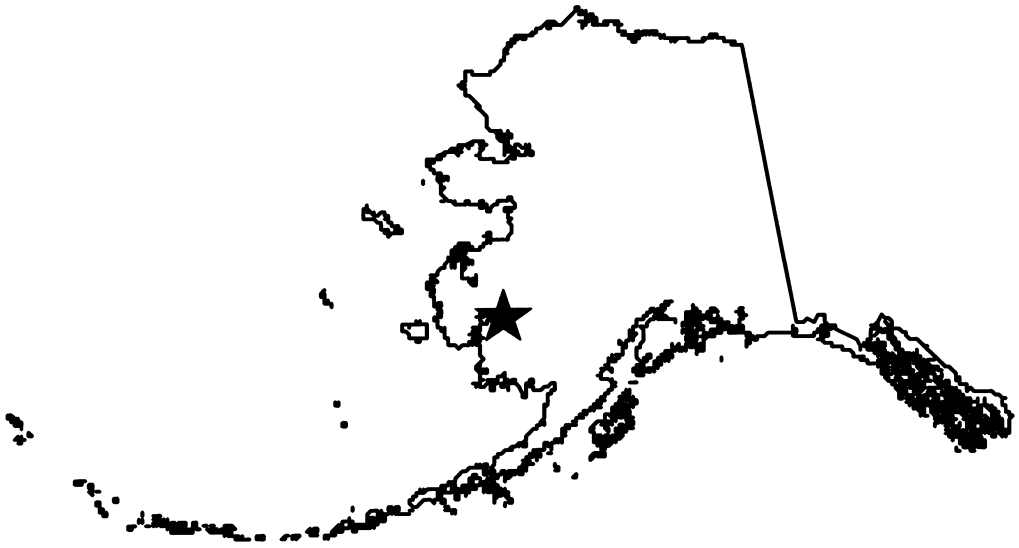

Prepared By
ALASKA DEPARTMENT OF TRANSPORTATION & PUBLIC FACILITIES
Central Region Materials
Anchorage, Alaska

ALASKA
Department of Transportation And Public Facilities

GEOLOGY DATA REPORT

BETHEL
CHIEF EDDIE HOFFMAN HIGHWAY
REHABILITATION AND SEPARATED PATHWAY
PROJECT NUMBER 53927

JANUARY 2005

Prepared By:

Catherine Roso
Engineering Geologist II

Reviewed By:

David Stanley, C.P.G.
Chief Geologist, Statewide Materials

Approved By:

John E. Fritz
Regional Geologist, Central Region

Approved By:

Newton Bingham, P.E.
Regional Materials Engineer, Central Region

TABLE OF CONTENTS

PROJECT DESCRIPTION 1
GEOLOGY AND TOPOGRAPHY 1
CLIMATE DATA 1
FIELD METHODS 2
STATION TO STATION DESCRIPTIONS: 2
REFERENCES 5

APPENDIX

APPENDIX A ..... TEST LOCATIONS
APPENDIX B ..... YEAR 2004 TEST HOLE LOGS
APPENDIX C ..... YEAR 2004 TEST PIT LOGS
APPENDIX D ..... YEAR 2000 PEDESTRIAN BRIDGE LOGS
APPENDIX E ..... LABORATORY REPORTS

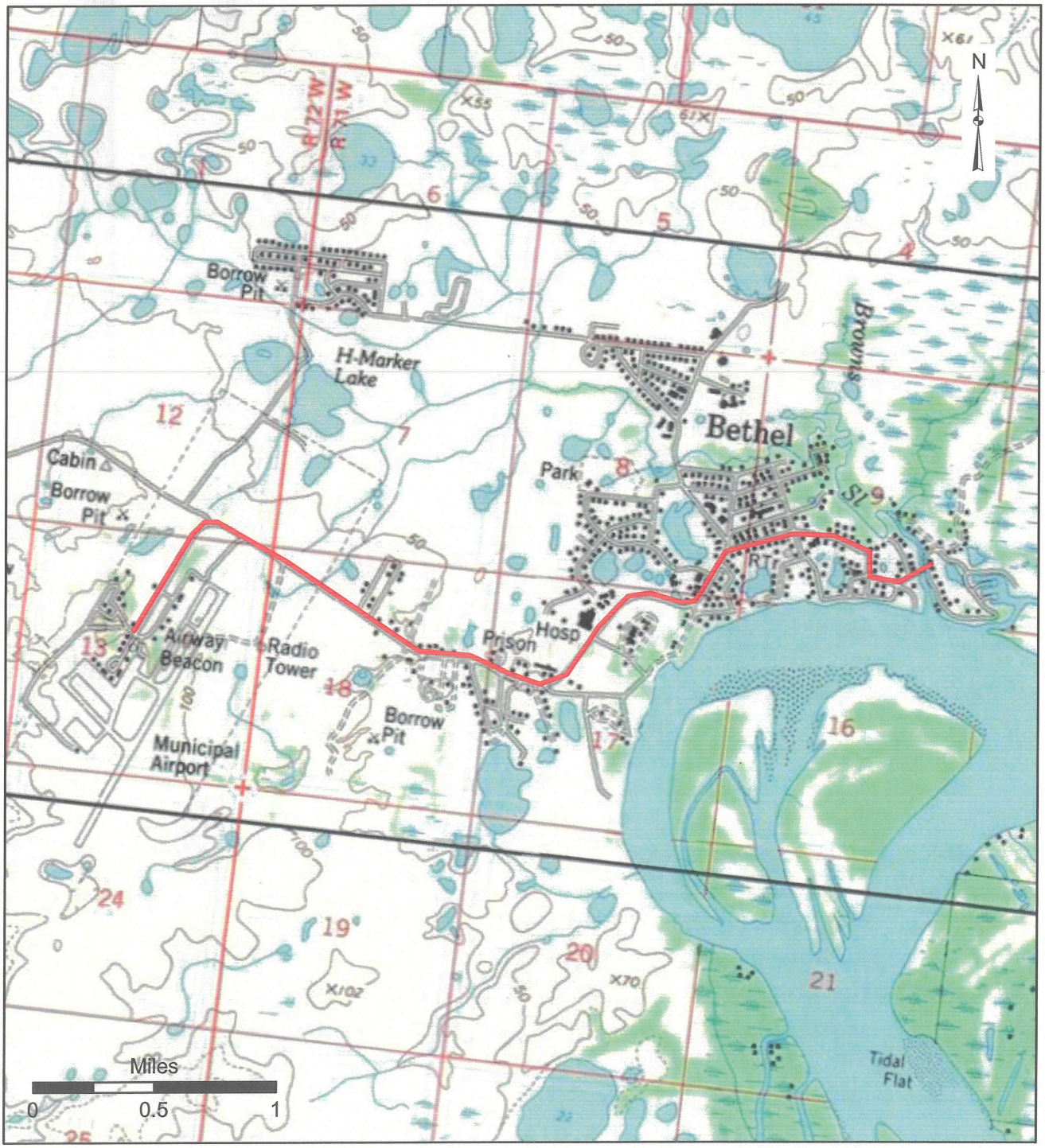

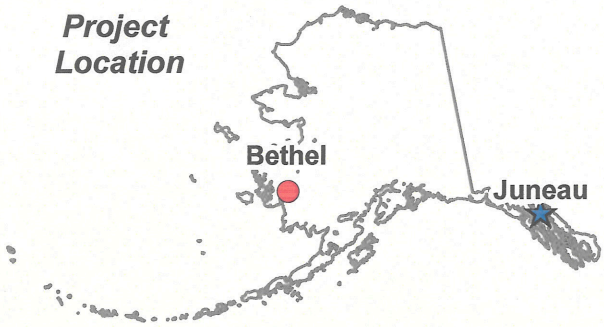

State of Alaska
Department of Transportation and Public Facilities

Bethel Chief Eddie Hoffman
Highway Rehabilitation
& Separated Pathway
Project No. 53927

Figure 1: Project Location Map

Created with TOPO!, ©2003 National Geographic Maps, All Rights Reserved

Map Document: (H:\Prj CReg\Hwy\Bethel ChfEddieHRd.53927\Data\GIS\53927Vicinity.mxd) 1/18/2005 -- 9:21:07 AM

PROJECT DESCRIPTION

The Alaska Department of Transportation & Public Facilities (ADOT&PF) plans to rehabilitate Chief Eddie Hoffman Highway in the town of Bethel, Alaska. Bethel is located approximately 400 air miles west of Anchorage and about 60 miles upriver from the mouth of the Kuskokwim River. Chief Eddie Hoffman Highway is the main route between the Bethel airport and the city. This rehabilitation will include widening of the paved road surface, repairing areas of periodic settlement and constructing a separated pathway. The separated pathway will include a new pedestrian bridge at Brown's Slough adjacent to Ridgecrest Road. See Figure 1 for project location.

In June and July of 2004, ADOT&PF drilled 21 test holes and excavated 14 test pits to determine soil classifications and geotechnical properties of the soils in the project. Soil samples were analyzed for gradation, organic content, and moisture content at the ADOT&PF Central Region Materials Laboratory. In May of 2000, ADOT&PF drilled 3 test holes and pushed 2 penetrometer tests at the proposed location of a new pedestrian bridge over Brown's Slough.

Geology and Topography

Bethel is located in the southeast portion of the Yukon-Kuskokwim lowland, a major physiographic division of Alaska. The general geology of the Bethel area is comprised of recent river deposits (alluvium) from the Kuskokwim River. The area topography is low tundra and lakes created from oxbows from the Kuskokwim River and glacial deposits. The soils in the area are primarily sands, silts and organics. A water well drilled near the Bethel Airport encountered 420 feet of predominantly frozen deltaic sediments. Bethel is located in an area with mostly continuous permafrost.

Climate Data

Bethel is within the Transitional Climatic Zone of Alaska, influenced by both marine and continental weather. Yearly average maximum temperature is 36.5°, and minimum temperature is 22.3°. Average annual precipitation is 16.82 in. and annual snowfall is 53.3 in. (From Alaska climate summary http://www.wrcc.dri.edu/ summary/climsmak).

FIELD METHODS

The 2004 ADOT&PF crew consisted of Catherine Roso as Engineering Geologist, and George Hamrick, Jason Love, Ed Carman and Ryan Ruth as drillers. The crew used a track mounted Mobile B-50 drill rig with 6 in. diameter hollow stem augers. Faulkner Walsh Constructors (a private subcontractor) provided labor and equipment for the test pit excavations. Equipment used to dig was a Hitachi "garden" backhoe, with a 6 ft. depth limit.

The crew sampled the soil with standard penetration test split spoon samplers (SPT), grab sampling, 3 in. diameter Shelby tubes and peat probing. All SPT samples were driven by a 140 lbs hammer falling 30 in. Grab samples taken during drilling were large volume bulk samples averaging 40-60 lbs per sample. Grab samples taken during test pitting were small volume samples averaging 1-2 lbs per sample. Shelby tube samples were pushed using the excavator bucket. The geologist performed peat probes by pushing a ½ in. diameter rod until refusal.

Two thermistor casings were installed in test holes and two thermistor strings were installed on July 22, 2004. These thermistors are being monitored over a period of 1 year and results will be summarized in other documents.

The 2000 ADOT&PF crew consisted of Tom Ottley as Engineering Geologist and Roy Briggs and Jeff Nelson as drillers. The crew used the same drill rig with hollow stem auger. The crew also collected SPT samples and Shelby Tube samples. Penetration tests were performed using 1.75 in. diameter rod driven by a 140 lbs hammer.

STATION TO STATION DESCRIPTIONS

Chief Eddie Hoffman Highway (CEHH) is constructed on raised embankment from the Bethel Airport to the intersection of Ridgecrest and Third Avenue. From the intersection of Ridgecrest and Third, the highway is older, narrower and in some areas matches original grade. The Brown Slough Bridge is at the end of the highway.

Test Holes within the structural section of CEHH encountered:

- 1.5-7 in. thick Asphalt Concrete
- Sand with gravel structural sections
- Fine grained sand fill
- Pink insulation and/or black plastic fabric
- Peat and/or stripped organics
- Silt and/or Silty Organics
- Free solid ice
- Frozen soils
- Groundwater
- Large unknown debris

Test Holes within the Brown Slough Bridge on CEHH encountered:

- 2-3 ft. of asphalt cold patch and asphalt concrete
- 15-20 ft. of fine sand fill
- 10 ft. of Ice and Ice rich silty organics
- Wet silt

Test pits encountered:

- Sand with gravel fill
- Fine grained sand fill
- Peat and/or organics
- Silt and/or Silty Organics
- Groundwater
- Asphalt Debris

BIA Road to Airport Access Road: Sta. 44+00 to Sta. 53+00

- The crew performed six peat probes from approximately Sta. 41+25 to about Sta. 46+50 in the south side of the right of way adjacent to and at the bottom of the CEHH embankment. The depth of peat ranged from 1 ft. to 2 ft.
- Pink foam insulation ranged from 3.5 ft. to 4.5 ft. deep in TH-04-01 and TH-04-02.
- In TH-04-04 at a depth of 4 ft., drilling was stopped due to refusal on unknown large debris.
- Thermistor casing and a thermistor were installed in TH-04-05 to a depth of 26 feet. The thermistor installed was instrumented at one-foot intervals.
- Structural section thickness varied from 11 ft. at about Sta. 46+47 to 5 ft. at Sta. 52+06.

Blueberry Rd. to Alex Hately Drive 66+00 to 95+00

- The crew encountered black woven fabric and pink insulation while drilling in this area.
- Structural section thickness varied from 6.8 ft. to 6 ft. in this area.

Hoffman Rd. to Standard Oil Rd. Sta. 105+00 to 130+00

- The crew found pink foam insulation in TH-04-08 at a depth of 3.3 ft.
- Structural section thickness varied from 7 ft. and 9.5 ft. in this area

US Fish and Wildlife Hill to Akiak St, Sta. 147+00 to Sta. 173+00

- Structural section thickness varied between 6 ft. and 7.5 ft. at the crest of the hill and 13.5 ft. at the edge of the small lake.
- Insulation was found at a depth of 3.5 ft. in TH-04-10
- The crew found buried asphalt in TH-04-11 at a depth of 3.1 ft.
- Embankment gravel was found in only TP-04-04 at a depth of 4 ft. (within the test pits excavated in this area)
- In TP-04-02, the crew found medium plasticity silt beneath undisturbed tundra.

3rd Ave to CEHH Brown's Slough Bridge

- The crew encountered black woven fabric and pink insulation while drilling through the embankment in this area.
- Structural section thickness varied between 10.5 ft. to 6.5 ft.

Brown's Slough Bridge Abutments

Test holes were located approximately in the center of the greatest visible settlement within the bridge abutments.

In the West abutment:
- Asphalt pavement and cold patch extended from the surface to 2.5 ft.
- Fine sand fill extended from 3 ft. to 17 ft.
- Silt with 20-40% ice and organics extended from 17 ft. to 24.8 ft.
- Wet silt with organics extended below the ice at 25 ft.

In the East abutment:
- Drilling was halted due to equipment failure at a depth of 9 ft. in fine sand fill.

Intersection of CEHH, Ridgecrest and 3rd Ave (Watson's Corner) Sta. 179+00 to 185+00

- Structural section thickness varied between 5.8 ft. and 8.5 ft. in this area.
- Ice was found at 10 ft. in TH-04-13 and at 8 ft. in TH-04-14.

Proposed Separated Pathway on Ridgecrest from CEHH to Ptarmigan Drive.
Pathway Sta. 25+00 to Sta. 35+00

- All test pits in this area had some fine sand fill from the roadway embankment.
- Groundwater was at 2.3 ft. on July 22, 2004 in TP-04-13.

From the year 2000 investigation at the Pedestrian Bridge location (Appendix D):

Penetrometer results for the proposed pedestrian bridge abutments showed dense soils at the surface to 3 ft. and loose/soft soils from about 4 ft. to 12 ft. deep. At about 10 ft. to 12 ft. deep resistance increased to a maximum of 150 blows at 27 ft. in Pen-00-04 (the south abutment). Resistance increased from a depth of 10 ft. to 136 blows at 45 ft. in Pen-00-02 (the north abutment).

Soil borings adjacent to the penetrometer tests show frozen soils to a depth of 3 ft. at the time of drilling. Organic Silt, silty sand and sandy silt beds extend to a depth of 39 ft. and sand from 39 ft. to 45 ft.

REFERENCES

State of Alaska; Department of Community and Economic Development, Alaska Community Database, Community Summaries, www.dced.state.ak.us/dca/commdb/CF_CIS.cfm, 2004

Alaska Department of Transportation & Public Facilities; Alaska Geotechnical Procedures Manual, Oct 2003

Herman, Dan; Alaska Department of Transportation & Public Facilities, Materials Investigation, Bethel Airport to Brown's Slough, Project number S-0608(1), January 1968, Anchorage District

Ottley, Tom; Alaska Department of Transportation & Public Facilities, Alaska Geotechnical Report Bethel Highway Project No. 57119, Central Region, May 1989

APPENDIX A
TEST HOLE LOCATIONS

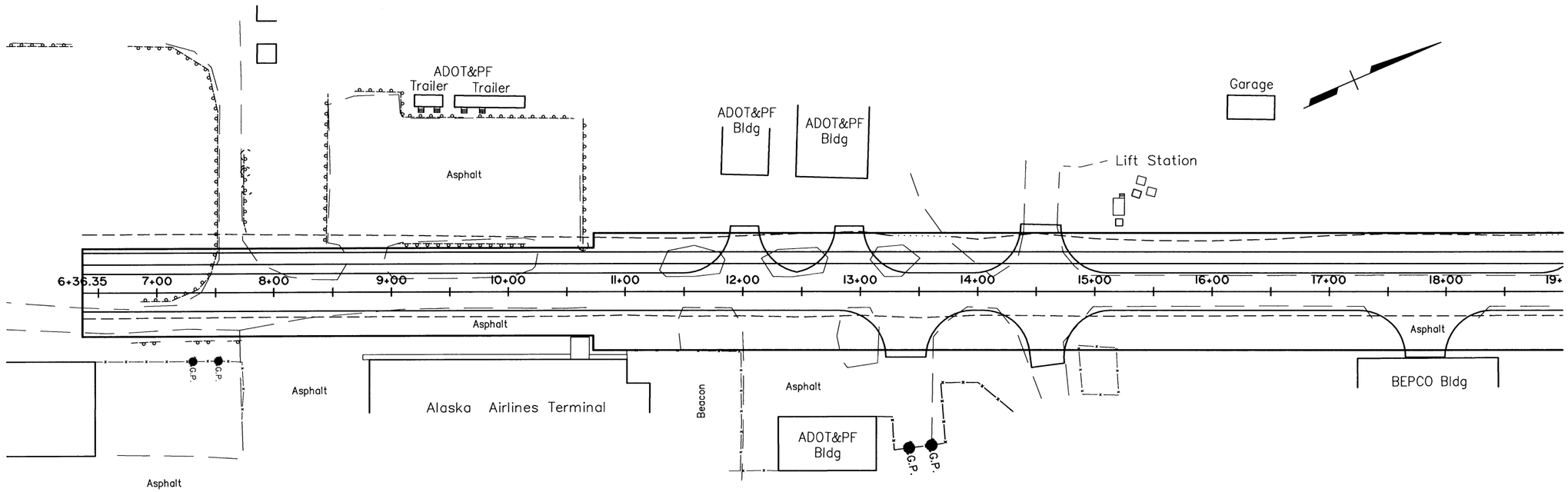

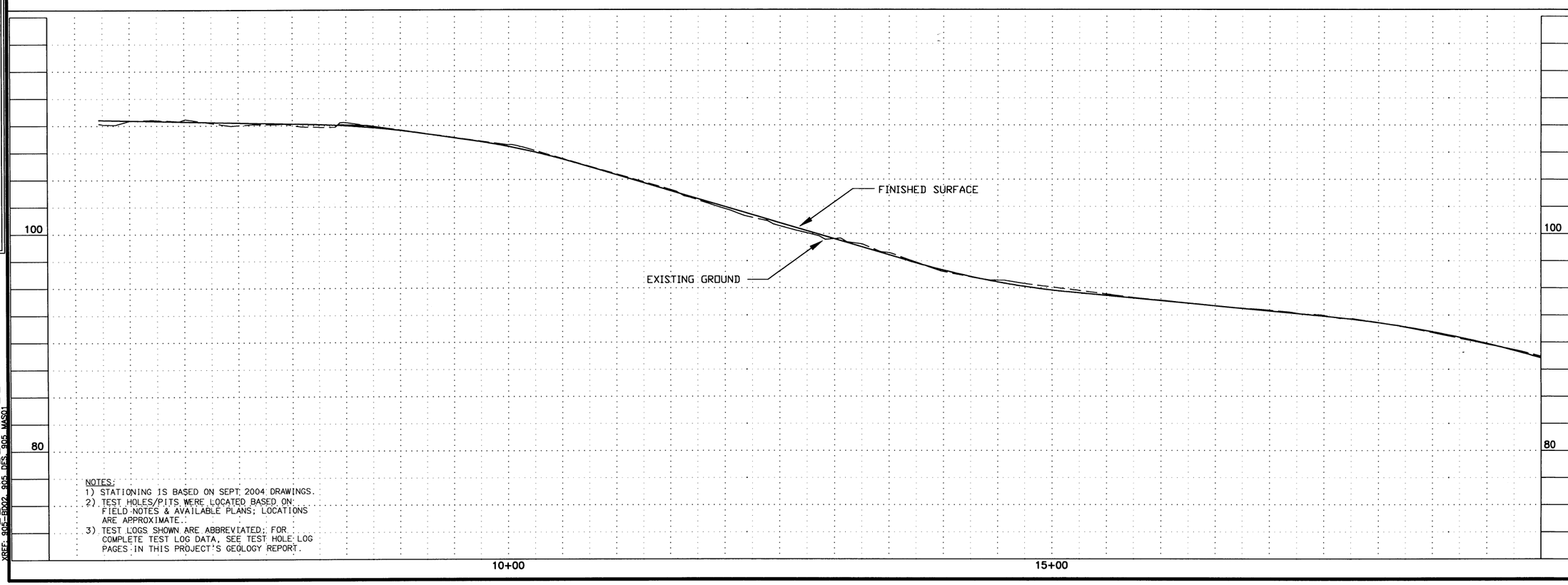

NOTES:
1) STATIONING IS BASED ON SEPT. 2004 DRAWINGS.
2) TEST HOLES/PITS WERE LOCATED BASED ON FIELD NOTES & AVAILABLE PLANS; LOCATIONS ARE APPROXIMATE.
3) TEST LOGS SHOWN ARE ABBREVIATED; FOR COMPLETE TEST LOG DATA, SEE TEST HOLE LOG PAGES IN THIS PROJECT'S GEOLOGY REPORT.

SHEET NO.	TOTAL SHEETS
H1	
STATE	YEAR
ALASKA	2004
PROJECT DESIGNATION	
STP-0208(9)/53927	
ADDENDUM NO.	
ATTACHMENT NO.	

REVISIONS

NO.	DATE	DESCRIPTION
1	SEPT '04	TEST HOLE/PIT LOCATIONS ADDED BY ADOT&PF

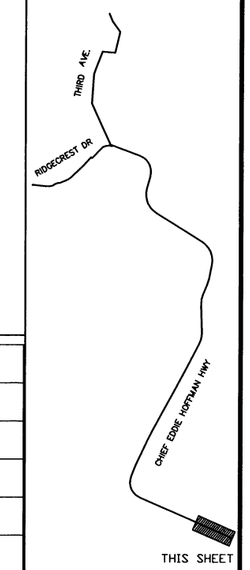

STATE OF ALASKA
DEPARTMENT OF TRANSPORTATION
AND PUBLIC FACILITIES

BETHEL, ALASKA
CHIEF EDDIE HOFFMAN
REHABILITATION

PLAN AND PROFILE
STA BOP – 19+50

DESIGNED BY	RDH, RAM CONSULTANTS, INC
CHECKED BY	RDH, RAM CONSULTANTS, INC
DRAWN BY	CDB, RAM CONSULTANTS, INC

SCALE	DATE	TIME
1:50	12/29/04	8:38 AM

DRAWING LOCATION
H:\Prj_CReg\Hwy\Bethel ChfEddieHRd,53927\Dwg\ACAD\PLAN_TH.dwg

VIEW: H01_F_D0755, H01_F_D1055, H01_HL_L5000
XREF: 905-B002, 905-DES, 905-MASQ1

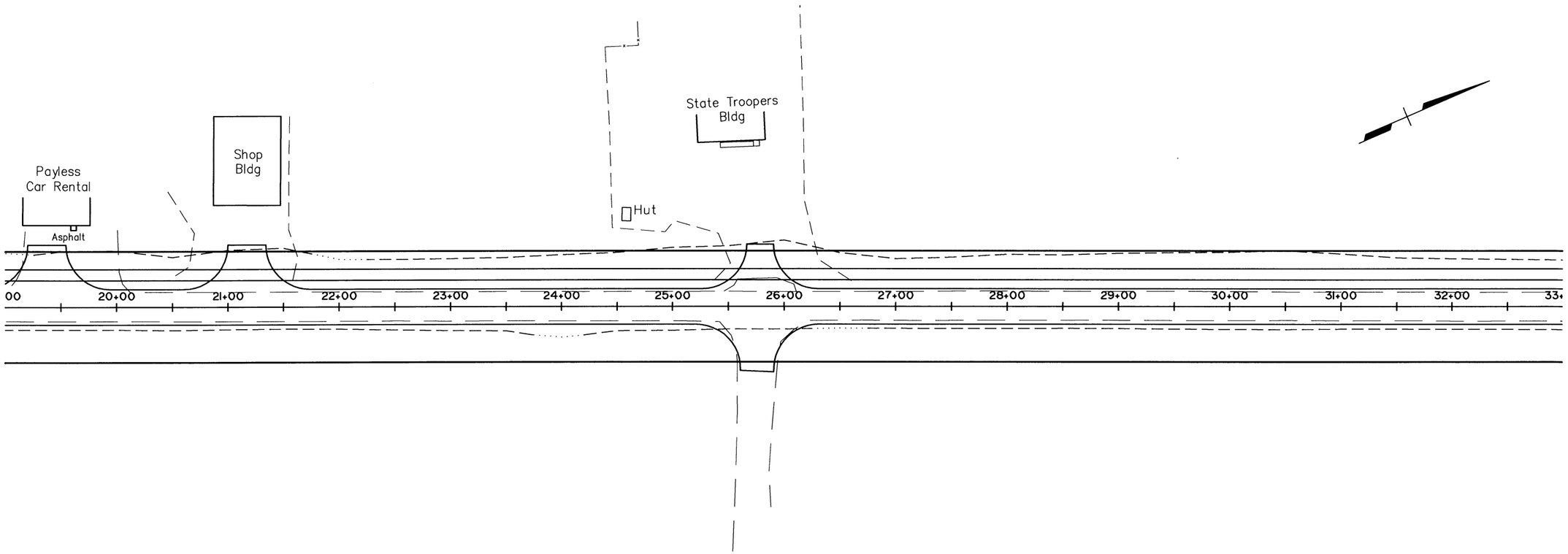

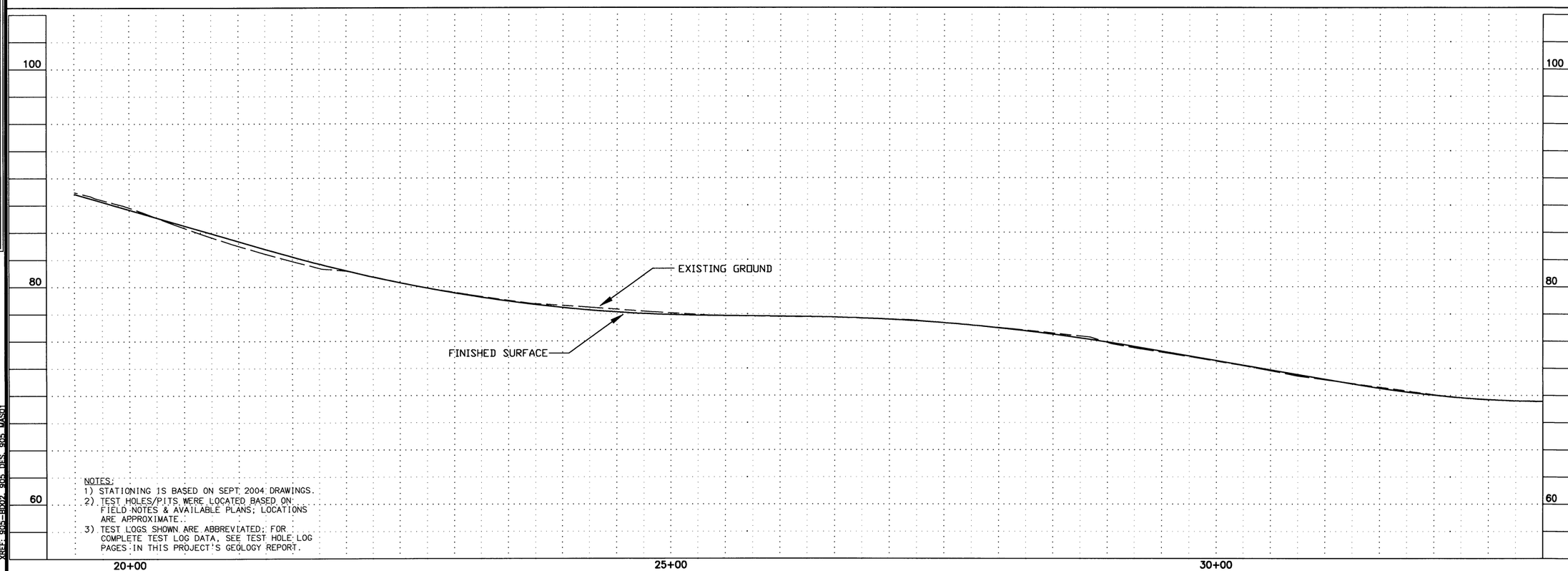

NOTES:
1) STATIONING IS BASED ON SEPT 2004 DRAWINGS.
2) TEST HOLES/PITS WERE LOCATED BASED ON FIELD NOTES & AVAILABLE PLANS; LOCATIONS ARE APPROXIMATE.
3) TEST LOGS SHOWN ARE ABBREVIATED; FOR COMPLETE TEST LOG DATA, SEE TEST HOLE LOG PAGES IN THIS PROJECT'S GEOLOGY REPORT.

SHEET NO.	TOTAL SHEETS
H2	
STATE	YEAR
ALASKA	2004

PROJECT DESIGNATION
STP-0208(9)/53927

ADDENDUM NO.

ATTACHMENT NO.

REVISIONS

NO.	DATE	DESCRIPTION
1	SEPT '04	TEST HOLE/PIT
LOCATIONS ADDED BY ADOT&PF		

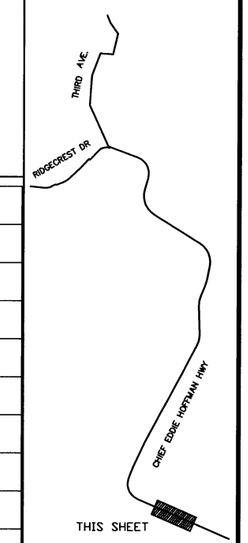

STATE OF ALASKA
DEPARTMENT OF TRANSPORTATION
AND PUBLIC FACILITIES

BETHEL, ALASKA
CHIEF EDDIE HOFFMAN
REHABILITATION

PLAN AND PROFILE
STA XX+XX – XX+XX

DRAWING LOCATION
H:\Prj CReg\Hwy\Bethel ChfEddieHRd,53927\Data\ACAD\PLAN_TH.dwg

DATE	TIME
12/29/04	8:38 AM

SCALE 1:50

DESIGNED BY	RDH, R&M CONSULTANTS, INC
CHECKED BY	RDH, R&M CONSULTANTS, INC
DRAFTED BY	CDB, R&M CONSULTANTS, INC

VIEW: H02_F_D0755, H02_F_D1055, H02_HL_L5000
XREF: 905-BD02, 905_DES, 905, MASQ1

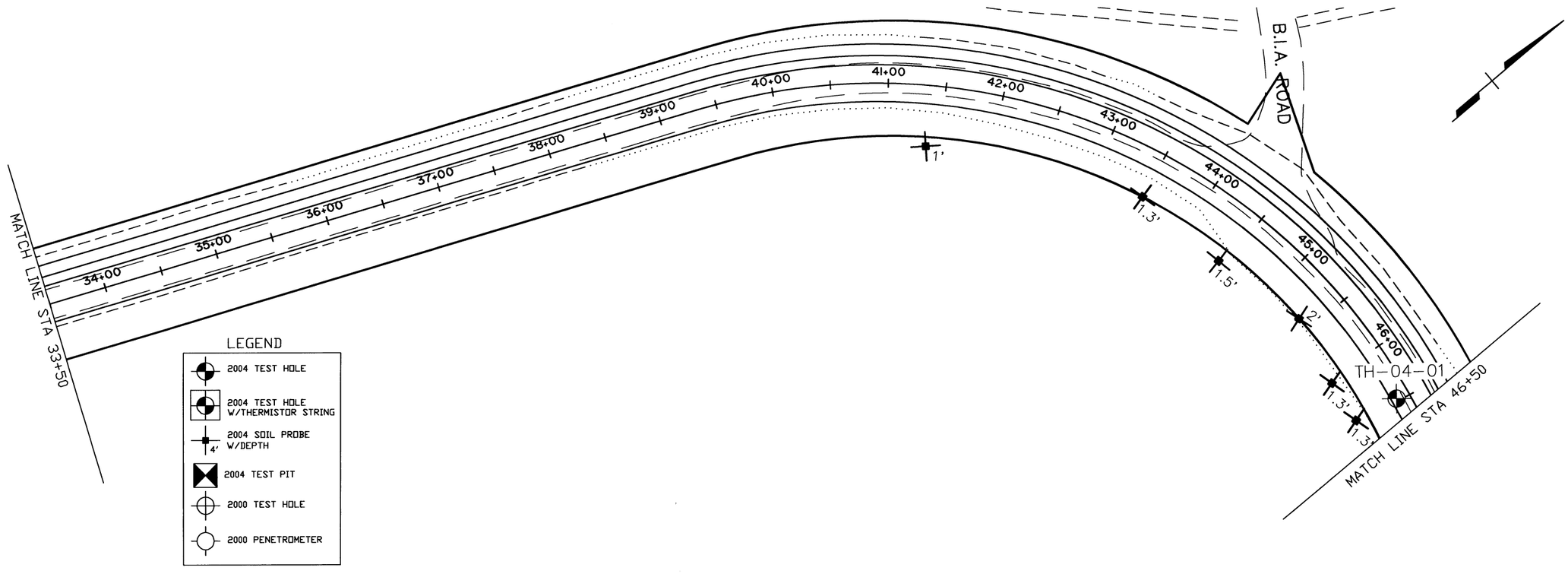

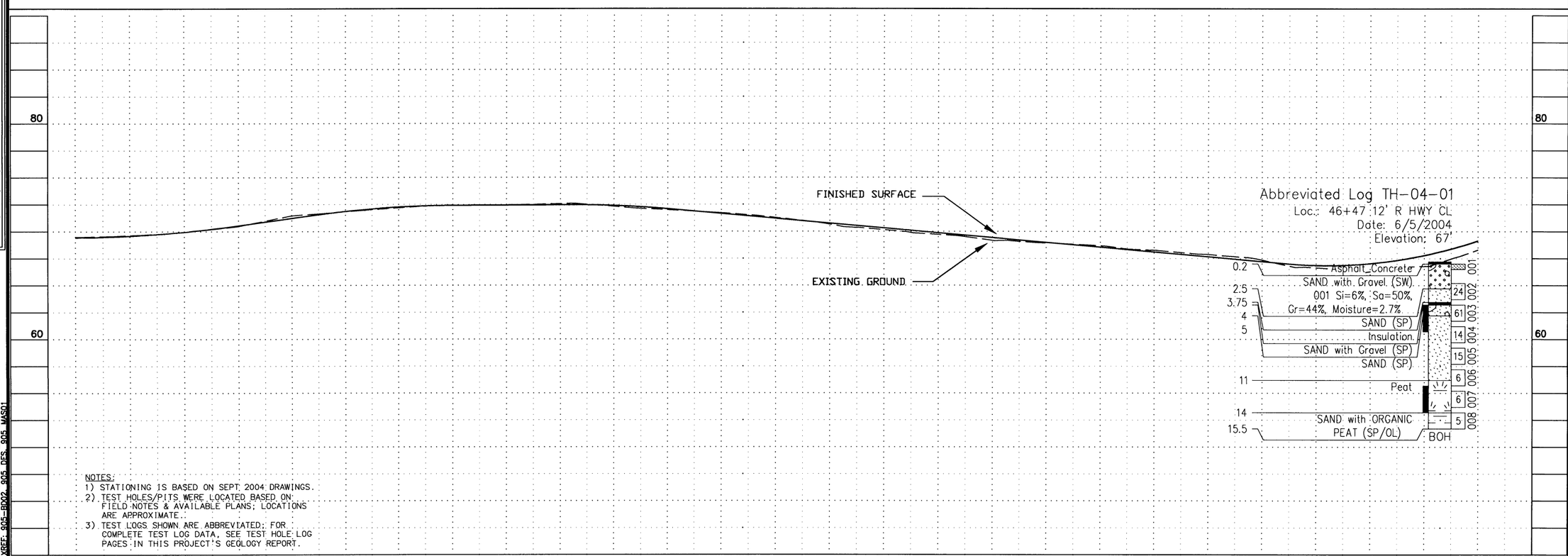

NOTES:
1) STATIONING IS BASED ON SEPT 2004 DRAWINGS.
2) TEST HOLES/PITS WERE LOCATED BASED ON FIELD NOTES & AVAILABLE PLANS; LOCATIONS ARE APPROXIMATE.
3) TEST LOGS SHOWN ARE ABBREVIATED; FOR COMPLETE TEST LOG DATA, SEE TEST HOLE LOG PAGES IN THIS PROJECT'S GEOLOGY REPORT.

SHEET NO.	TOTAL SHEETS
H3	
STATE	YEAR
ALASKA	2004

PROJECT DESIGNATION
STP-0208(9)/53927

ADDENDUM NO.

ATTACHMENT NO.

REVISIONS

NO.	DATE	DESCRIPTION
1	SEPT '04	TEST HOLE/PIT LOCATIONS ADDED BY ADOT&PF

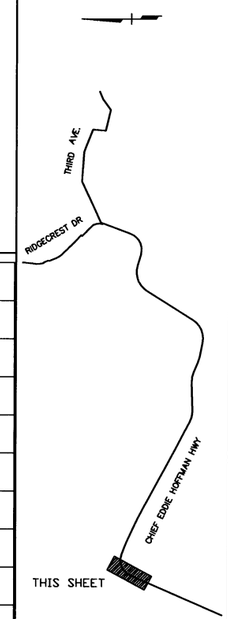

STATE OF ALASKA
DEPARTMENT OF TRANSPORTATION AND PUBLIC FACILITIES

BETHEL, ALASKA
CHIEF EDDIE HOFFMAN REHABILITATION

TEST HOLE LOCATIONS PLAN & PROFILE STA 33+50 – 46+50

DRAWING LOCATION
H:\Prj_CReg\Hwy\Bethel_ChfEddieHRd_53927\Data\ACAD\PLAN_TH.dwg

DATE	TIME	SCALE	DESIGNED BY	RDH, R&M CONSULTANTS, INC
12/29/04	8:38 AM	1:50	CHECKED BY	RDH, R&M CONSULTANTS, INC
			DRAWN BY	CDB, R&M CONSULTANTS, INC

VIEW: H03_F_D0755, H03_F_D1055, H03_H_L5000
XREF: 905-B002, 905_DES, 905_MAS01

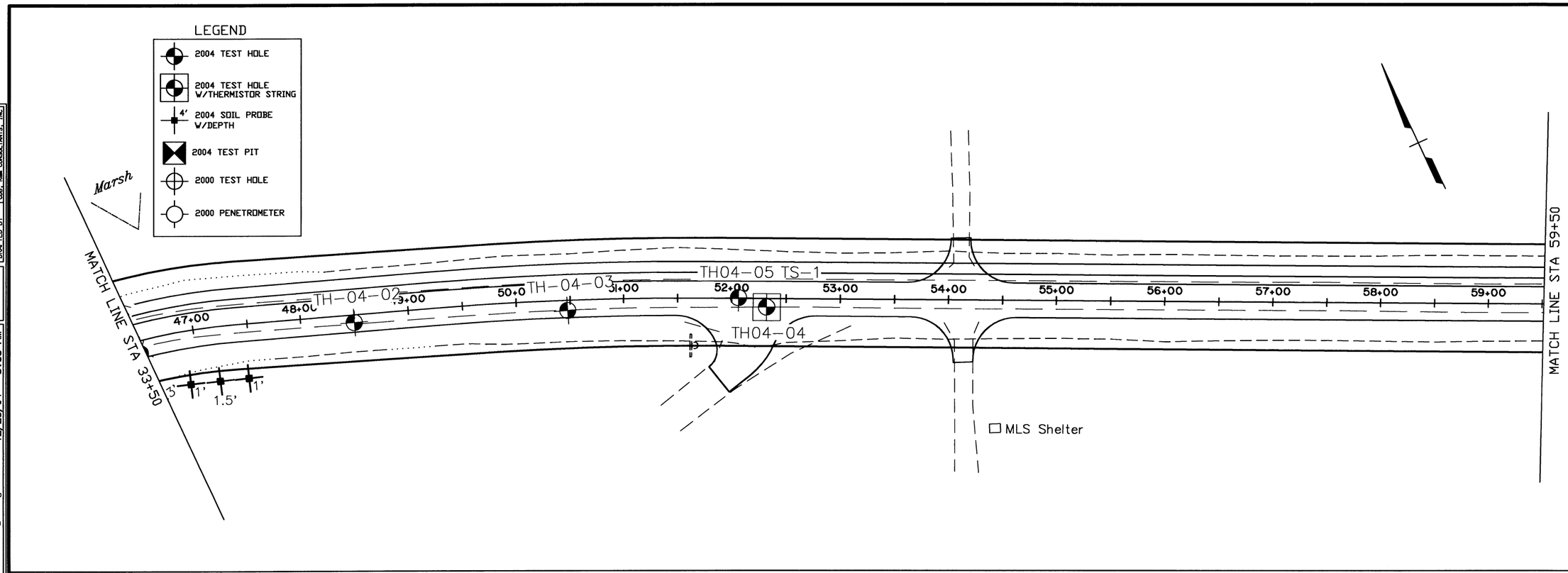

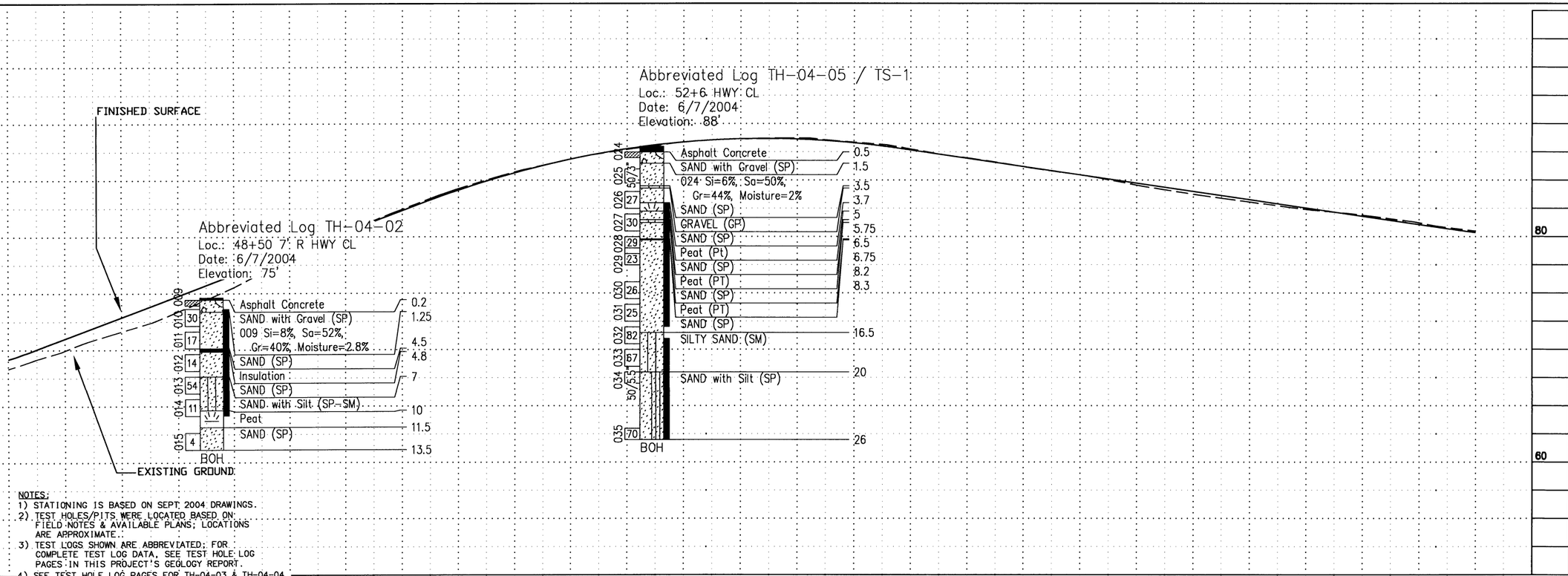

NOTES:
1) STATIONING IS BASED ON SEPT 2004 DRAWINGS.
2) TEST HOLES/PITS WERE LOCATED BASED ON: FIELD NOTES & AVAILABLE PLANS; LOCATIONS ARE APPROXIMATE.
3) TEST LOGS SHOWN ARE ABBREVIATED; FOR COMPLETE TEST LOG DATA, SEE TEST HOLE LOG PAGES IN THIS PROJECT'S GEOLOGY REPORT.
4) SEE TEST HOLE LOG PAGES FOR TH-04-03 & TH-04-04.

SHEET NO.	TOTAL SHEETS
H4	
STATE	YEAR
ALASKA	2004
PROJECT DESIGNATION	
STP-0208(9)/53927	
ADDENDUM NO.	
ATTACHMENT NO.	

REVISIONS

NO.	DATE	DESCRIPTION
1	SEPT '04	TEST HOLE/PIT
LOCATIONS ADDED BY ADOT&PF		

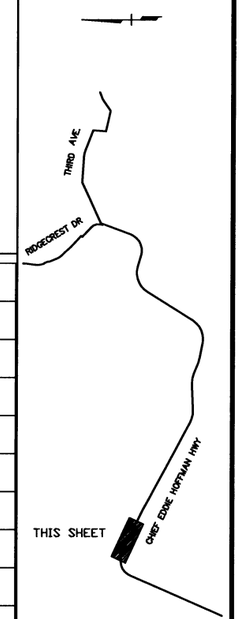

STATE OF ALASKA
DEPARTMENT OF TRANSPORTATION AND PUBLIC FACILITIES

BETHEL, ALASKA
CHIEF EDDIE HOFFMAN REHABILITATION

TEST HOLE LOCATIONS PLAN AND PROFILE STA 46+50 – 59+50

DRAWING LOCATION
H:\Prj CReg\Hwy\Bethel ChfEddieHRd\53927\Data\ACAD\PLAN_TH.dwg

DATE	TIME
12/29/04	8:38 AM

SCALE 1:50

DESIGNED BY RDH, RAM CONSULTANTS, INC
CHECKED BY RDH, RAM CONSULTANTS, INC
DRAFTED BY CDB, RAM CONSULTANTS, INC

VIEW: H04_F_D0755, H04_F_D1055, H04_HL_L5000
XREF: BDS-EXP2, BDS-BASE, BDS-TOPO, BDS-ASBUILT

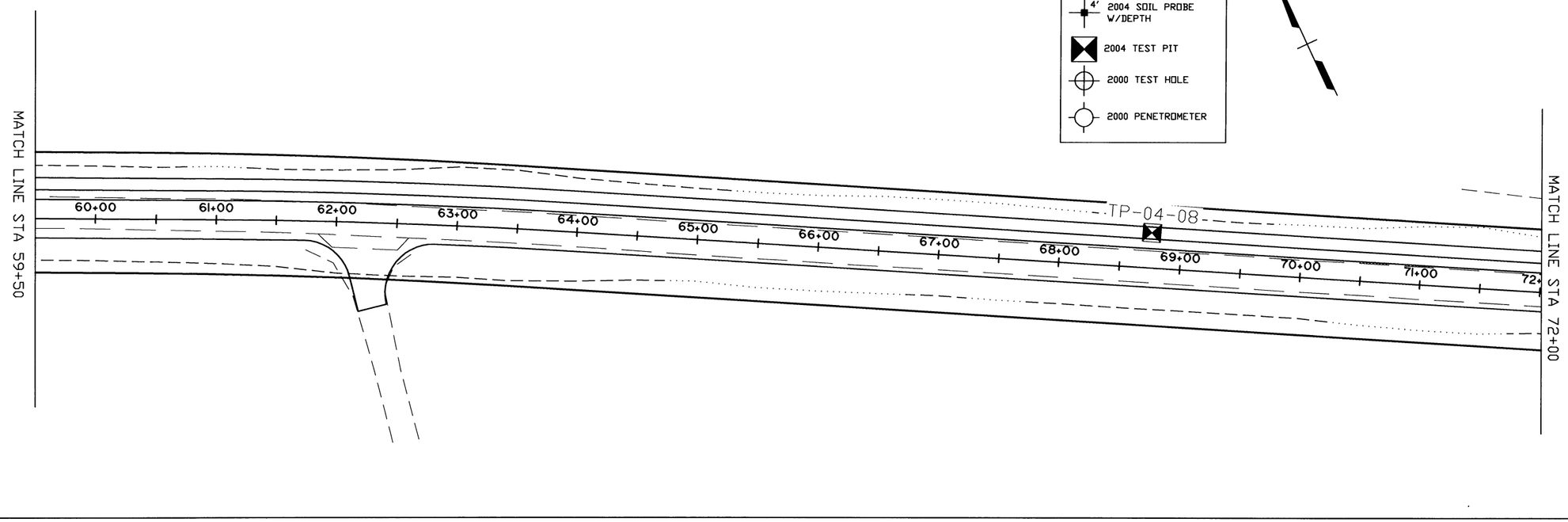

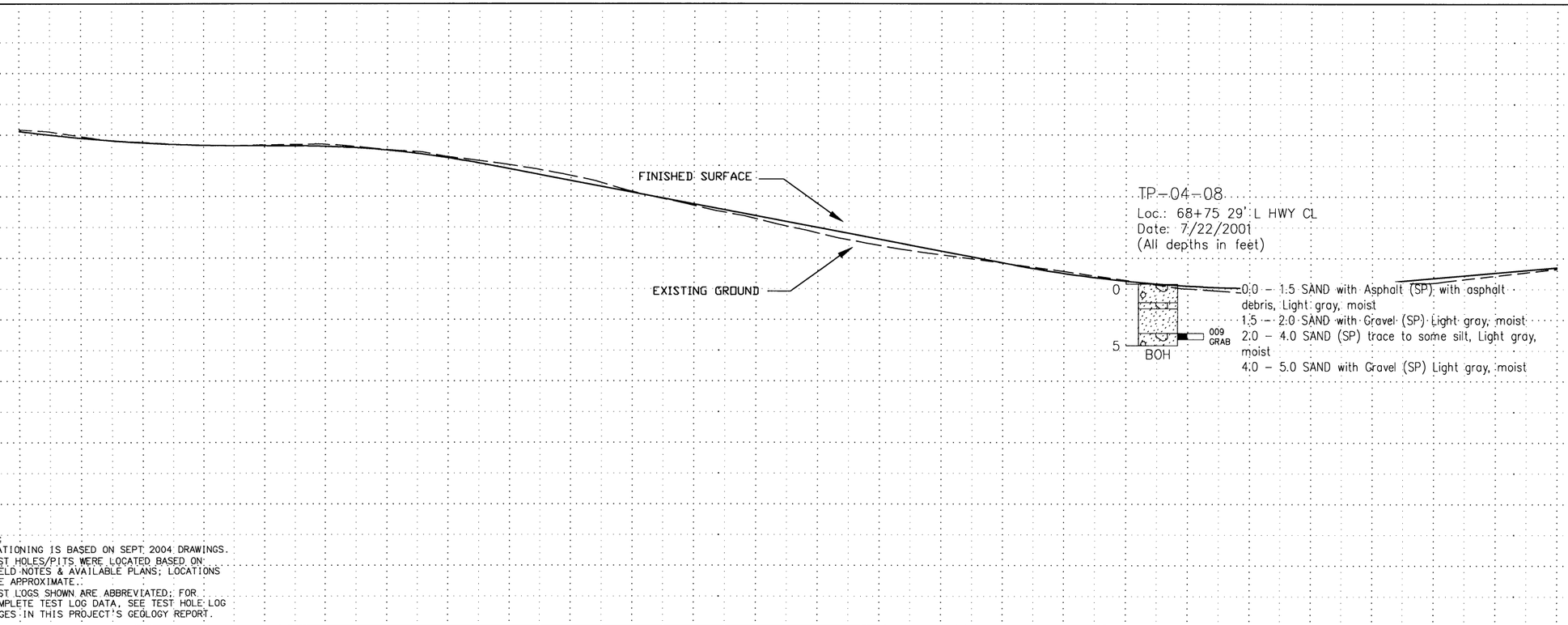

NOTES:
1) STATIONING IS BASED ON SEPT 2004 DRAWINGS.
2) TEST HOLES/PITS WERE LOCATED BASED ON: FIELD NOTES & AVAILABLE PLANS; LOCATIONS ARE APPROXIMATE.
3) TEST LOGS SHOWN ARE ABBREVIATED; FOR COMPLETE TEST LOG DATA, SEE TEST HOLE LOG PAGES IN THIS PROJECT'S GEOLOGY REPORT.

SHEET NO.	TOTAL SHEETS
H5	
STATE	YEAR
ALASKA	2004

PROJECT DESIGNATION
STP-0208(9)/53927

ADDENDUM NO.

ATTACHMENT NO.

REVISIONS

NO.	DATE	DESCRIPTION
1	SEPT '04	TEST HOLE/PIT
LOCATIONS ADDED BY ADOT&PF		

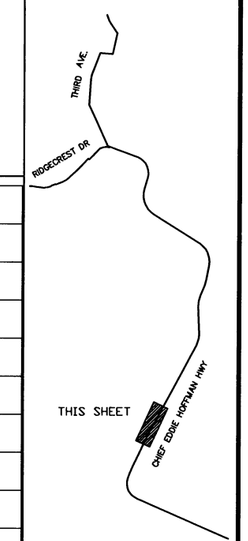

STATE OF ALASKA
DEPARTMENT OF TRANSPORTATION AND PUBLIC FACILITIES

BETHEL, ALASKA
CHIEF EDDIE HOFFMAN REHABILITATION

TEST HOLE LOCATIONS PLAN AND PROFILE STA 59+50 – 72+00

DRAWING LOCATION
H:\Prj CReg\Hwy\Bethel ChFEddieHRd\53927\Data\ACAD\PLAN_TH.dwg

DATE	TIME	SCALE
12/29/04	8:38 AM	1:50

DESIGNED BY	RDH, R&M CONSULTANTS, INC
CHECKED BY	RDH, R&M CONSULTANTS, INC
DRAFTED BY	CDB, R&M CONSULTANTS, INC

VIEW: H05_F_D0755, H05_F_D1055, H05_H_L5000
XREF: 905-B002, 905-DFS, 905-MAS01

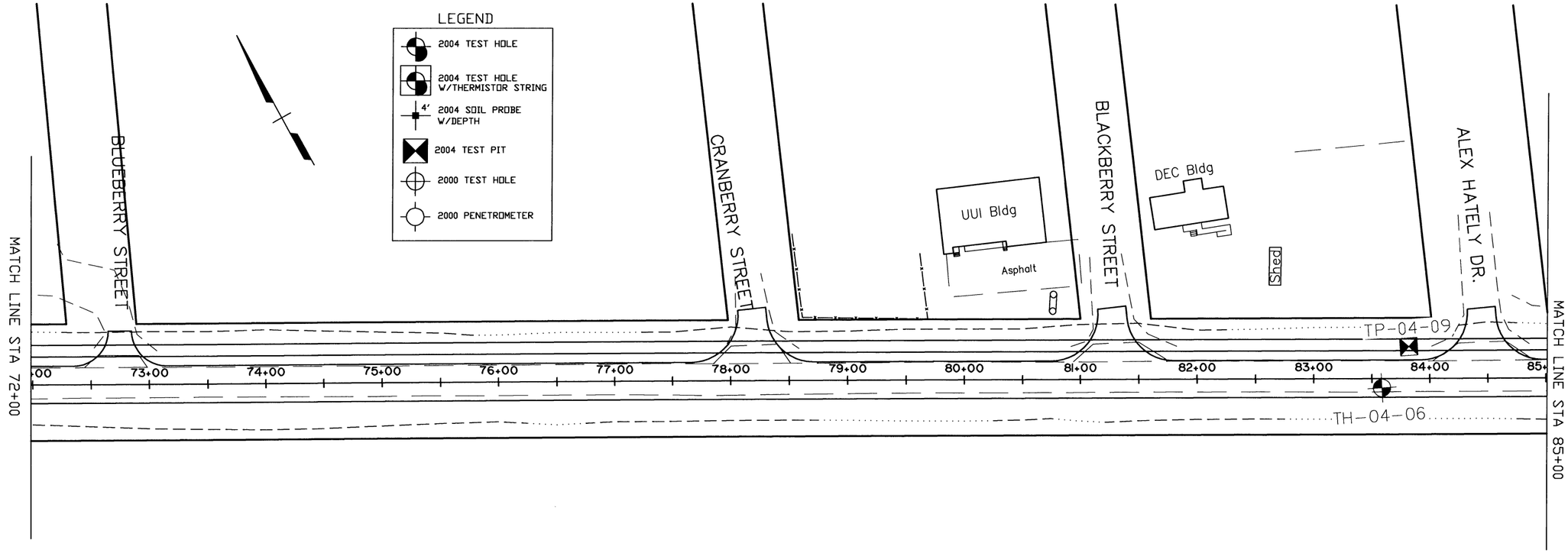

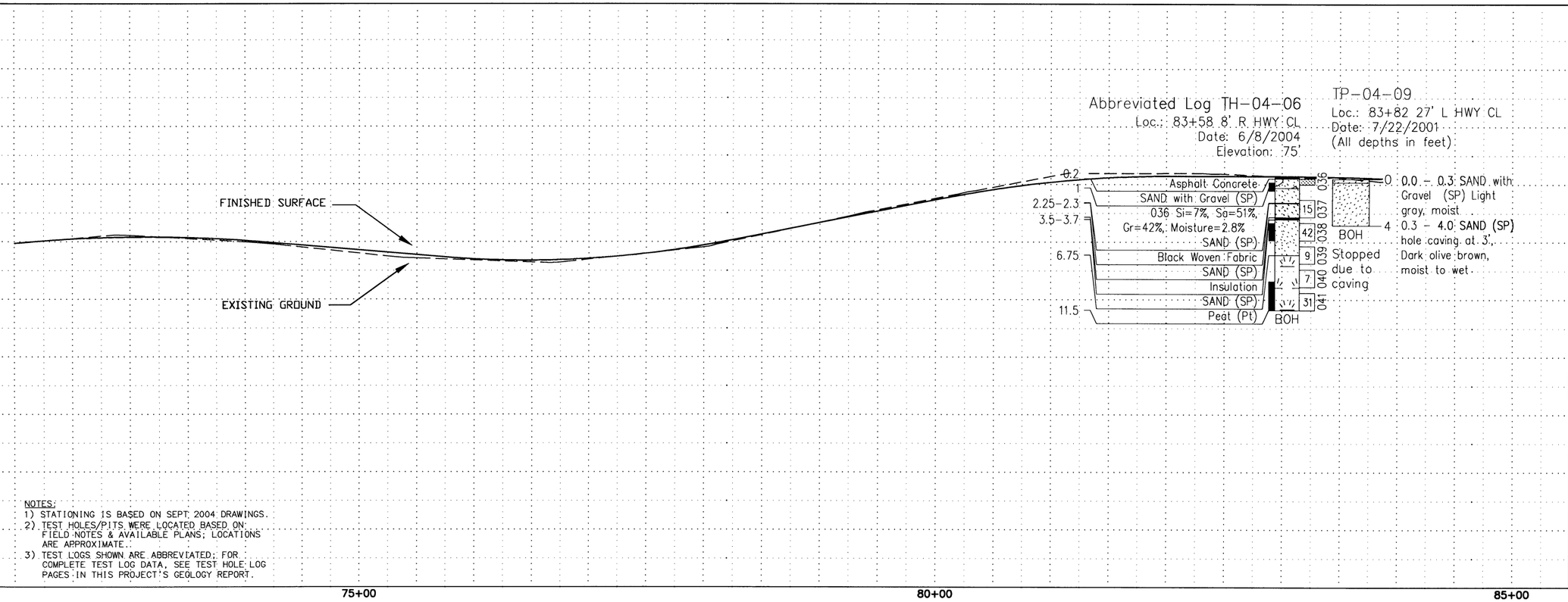

NOTES:
1) STATIONING IS BASED ON SEPT. 2004 DRAWINGS.
2) TEST HOLES/PITS WERE LOCATED BASED ON: FIELD NOTES & AVAILABLE PLANS; LOCATIONS ARE APPROXIMATE.
3) TEST LOGS SHOWN ARE ABBREVIATED; FOR COMPLETE TEST LOG DATA, SEE TEST HOLE LOG PAGES IN THIS PROJECT'S GEOLOGY REPORT.

SHEET NO.	TOTAL SHEETS
H6	
STATE	YEAR
ALASKA	2004

PROJECT DESIGNATION
STP-0208(9)/53927

ADDENDUM NO.

ATTACHMENT NO.

REVISIONS

NO.	DATE	DESCRIPTION
1	SEPT '04	TEST HOLE/PIT LOCATIONS ADDED BY ADOT&PF

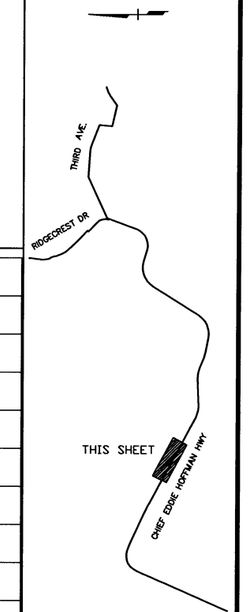

STATE OF ALASKA
DEPARTMENT OF TRANSPORTATION AND PUBLIC FACILITIES

BETHEL, ALASKA
CHIEF EDDIE HOFFMAN REHABILITATION

TEST HOLE LOCATIONS PLAN AND PROFILE STA 72+00 – 85+00

DRAWING LOCATION
H:\Prj_CReg\Hwy\Bethel ChfEddieHRd\53927\Data\ACAD\PLAN_TH.dwg

DATE	TIME	SCALE	DESIGNED BY	RDH, R&M CONSULTANTS, INC
12/29/04	8:38 AM	1:50	CHECKED BY	RDH, R&M CONSULTANTS, INC
			DRAFTED BY	CDB, R&M CONSULTANTS, INC

VIEW: H06_F_D0755, H06_F_D1055, H06_H_L5000
XREF: 905-BD02, 905_DES, 905_MAS01

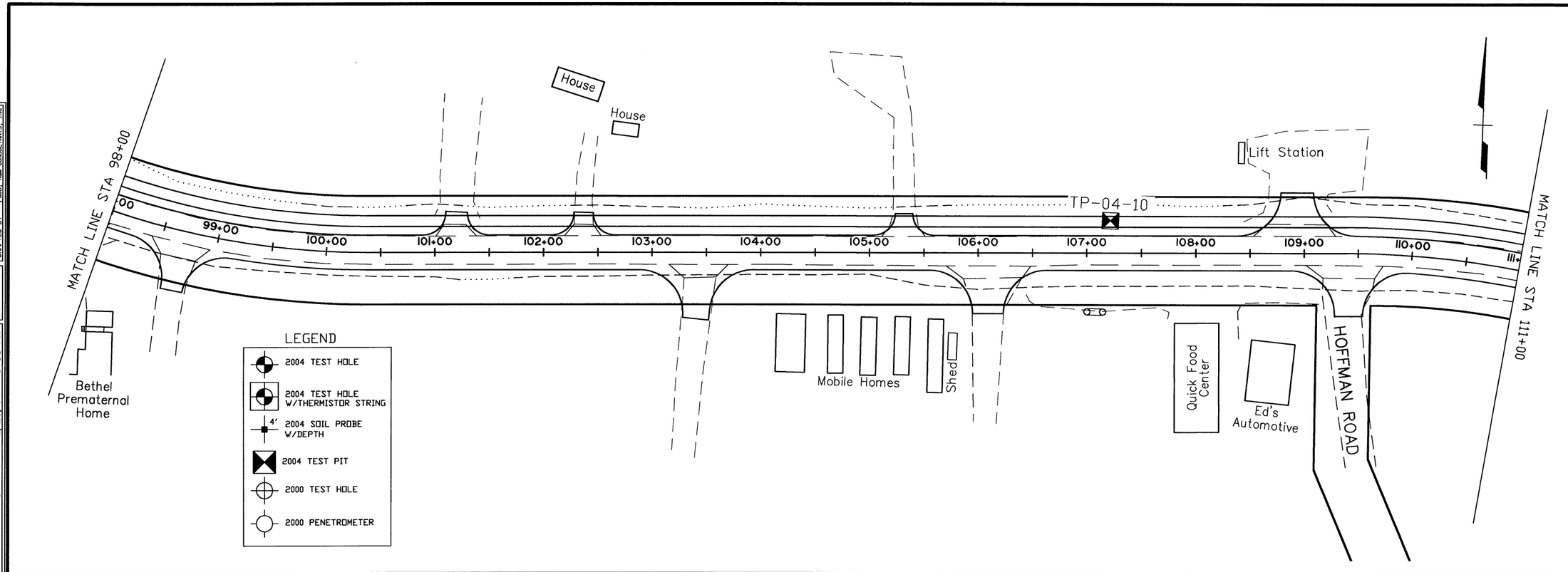

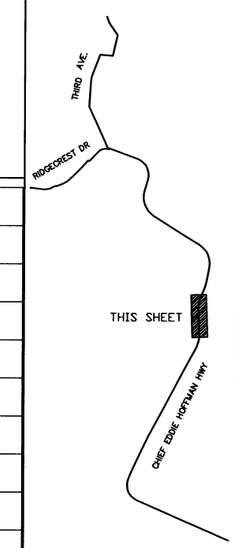

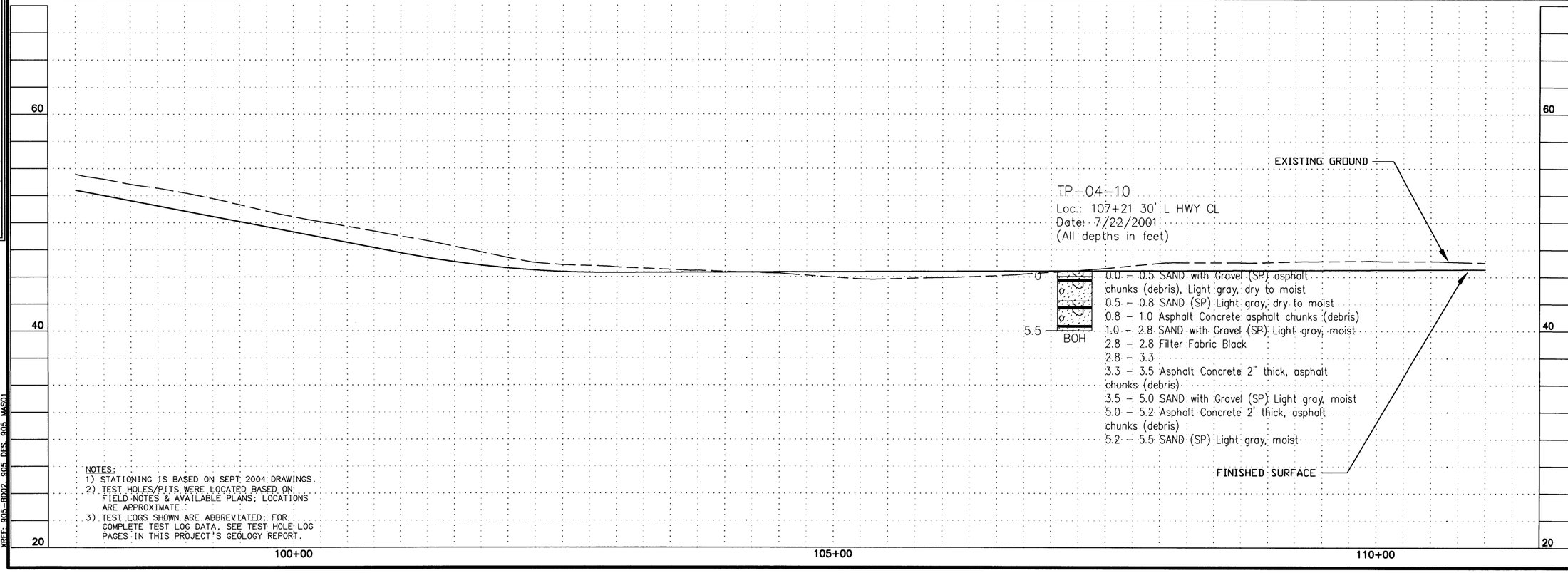

NOTES:
1) STATIONING IS BASED ON SEPT. 2004 DRAWINGS.
2) TEST HOLES/PITS WERE LOCATED BASED ON FIELD NOTES & AVAILABLE PLANS; LOCATIONS ARE APPROXIMATE.
3) TEST LOGS SHOWN ARE ABBREVIATED; FOR COMPLETE TEST LOG DATA, SEE TEST HOLE LOG PAGES IN THIS PROJECT'S GEOLOGY REPORT.

SHEET NO.	TOTAL SHEETS
H8	
STATE	YEAR
ALASKA	2004
PROJECT DESIGNATION	
STP-0208(9)/53927	
ADDENDUM NO.	
ATTACHMENT NO.	

REVISIONS

NO.	DATE	DESCRIPTION
1	SEPT '04	TEST HOLE/PIT
LOCATIONS ADDED BY ADOT&PF		

STATE OF ALASKA
DEPARTMENT OF TRANSPORTATION AND PUBLIC FACILITIES

BETHEL, ALASKA
CHIEF EDDIE HOFFMAN REHABILITATION

TEST HOLE LOCATIONS PLAN AND PROFILE
STA 98+00 – 111+00

DRAWING LOCATION			
H:\Proj\Reg\Hwy\Bethel ChfEddieHRd\53927\Data\ACAD\PLAN_TH.dwg	DESIGNED BY	RDH, R&M CONSULTANTS, INC	
	CHECKED BY	RDH, R&M CONSULTANTS, INC	
	DRAFTED BY	CDB, R&M CONSULTANTS, INC	
	SCALE	1:50	
	DATE	12/29/04	TIME 8:38 AM

VIEW: H08_F_D0755, H08_F_D1055, H08_HL5000
XREF: 905_BD02, 905_DES, 905_MAS01

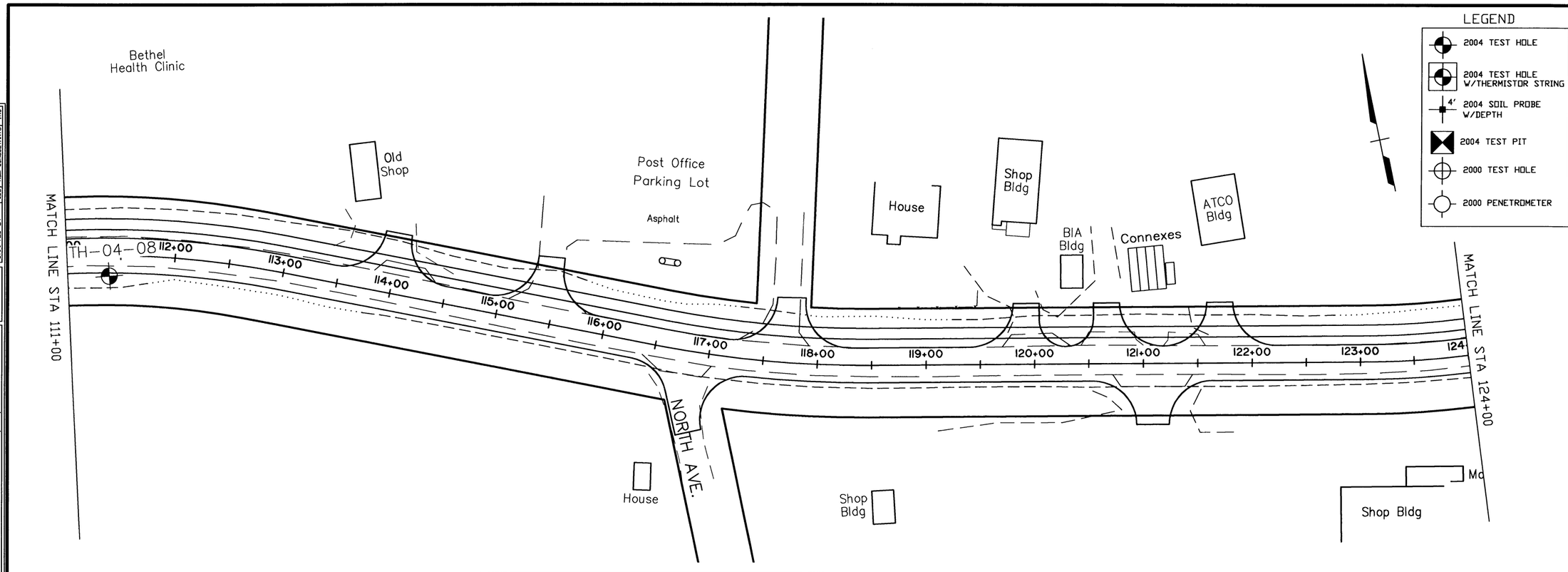

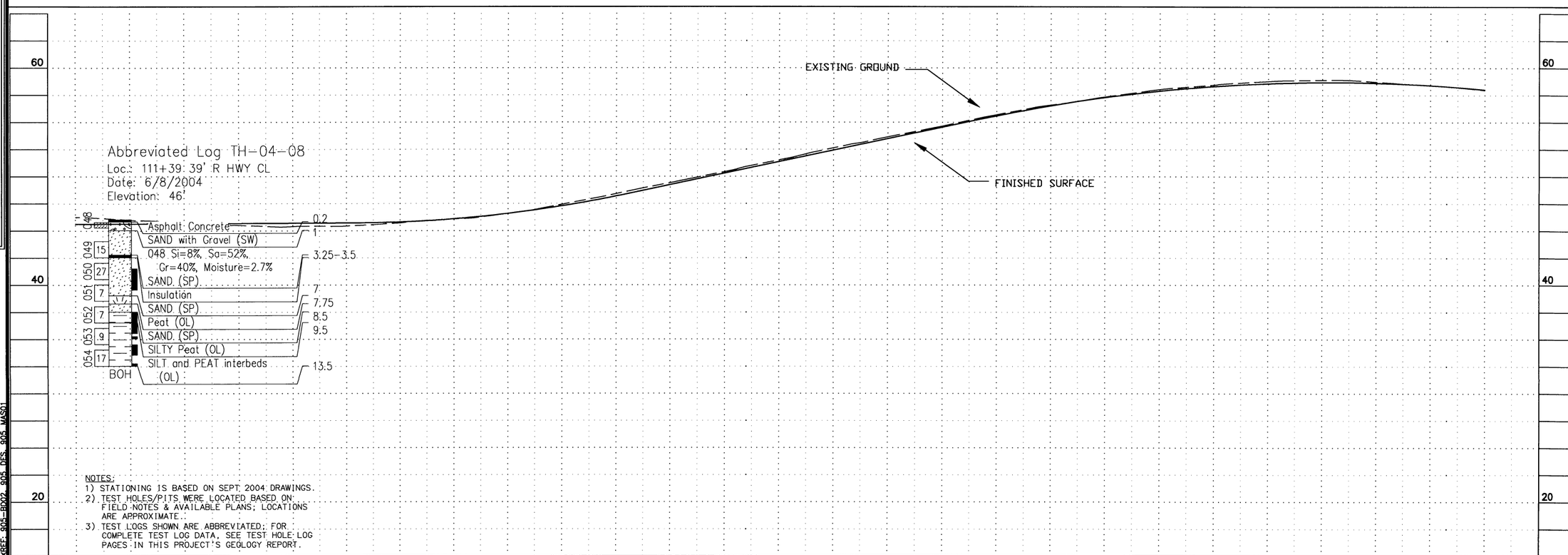

NOTES:
1) STATIONING IS BASED ON SEPT 2004 DRAWINGS.
2) TEST HOLES/PITS WERE LOCATED BASED ON FIELD NOTES & AVAILABLE PLANS; LOCATIONS ARE APPROXIMATE.
3) TEST LOGS SHOWN ARE ABBREVIATED; FOR COMPLETE TEST LOG DATA, SEE TEST HOLE LOG PAGES IN THIS PROJECT'S GEOLOGY REPORT.

SHEET NO.	TOTAL SHEETS
H9	
STATE	YEAR
ALASKA	2004
PROJECT DESIGNATION	
STP-0208(9)/53927	
ADDENDUM NO.	
ATTACHMENT NO.	

REVISIONS

NO.	DATE	DESCRIPTION
1	SEPT '04	TEST HOLE/PIT
LOCATIONS ADDED BY ADOT&PF		

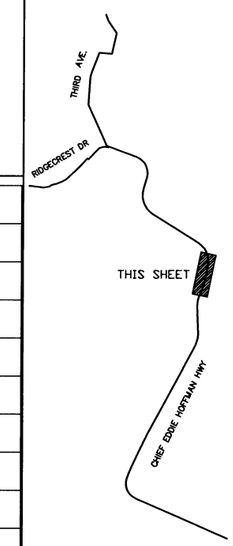

STATE OF ALASKA
DEPARTMENT OF TRANSPORTATION AND PUBLIC FACILITIES

BETHEL, ALASKA
CHIEF EDDIE HOFFMAN REHABILITATION

TEST HOLE LOCATIONS PLAN AND PROFILE
STA 111+00 – 124+00

DRAWING LOCATION		
H:\Prj_CReg\Hwy\Bethel ChfEddieHRd.53927\Dato\ACAD\PLAN_TH.dwg	DESIGNED BY	RDH, R&M CONSULTANTS, INC
	CHECKED BY	RDH, R&M CONSULTANTS, INC
	DRAFTED BY	CDB, R&M CONSULTANTS, INC
SCALE 1:50	DATE 12/29/04	TIME 8:38 AM

VIEW: H09_F_D0755, H09_F_D1055, H09_HL_L5000
XREF: 905-B002, 905_DES, 905_MASQ1

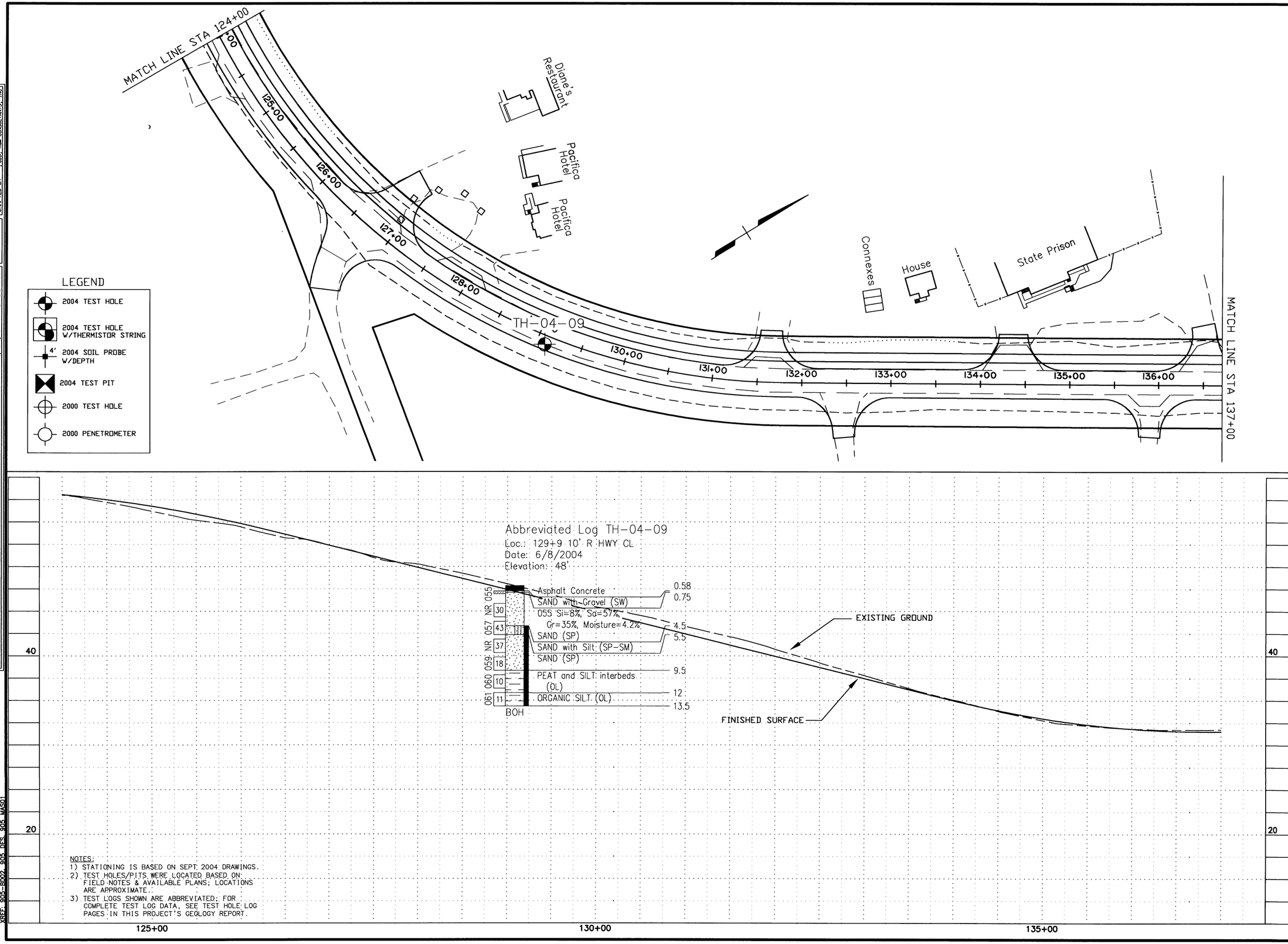

NOTES:
1) STATIONING IS BASED ON SEPT. 2004 DRAWINGS.
2) TEST HOLES/PITS WERE LOCATED BASED ON: FIELD NOTES & AVAILABLE PLANS; LOCATIONS ARE APPROXIMATE.
3) TEST LOGS SHOWN ARE ABBREVIATED; FOR COMPLETE TEST LOG DATA, SEE TEST HOLE LOG PAGES IN THIS PROJECT'S GEOLOGY REPORT.

SHEET NO.	TOTAL SHEETS
H10	
STATE	YEAR
ALASKA	2004

PROJECT DESIGNATION
STP-0208(9)/53927

ADDENDUM NO.

ATTACHMENT NO.

REVISIONS

NO.	DATE	DESCRIPTION
1	SEPT '04	TEST HOLE/PIT LOCATIONS ADDED BY ADOT&PF

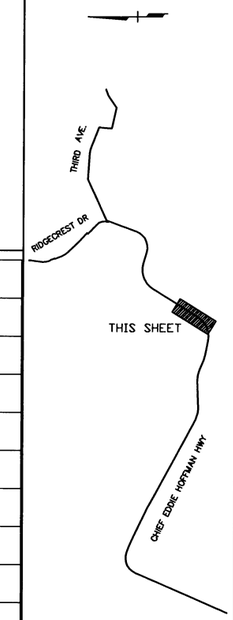

STATE OF ALASKA
DEPARTMENT OF TRANSPORTATION AND PUBLIC FACILITIES

BETHEL, ALASKA
CHIEF EDDIE HOFFMAN REHABILITATION

TEST HOLE LOCATIONS PLAN AND PROFILE
STA 124+00 – 137+00

DESIGNED BY	RDH, R&M CONSULTANTS, INC
CHECKED BY	RDH, R&M CONSULTANTS, INC
DRAFTED BY	CDB, R&M CONSULTANTS, INC

SCALE 1:50

DATE 12/29/04 TIME 8:38 AM

DRAWING LOCATION
H:\Prj_CReg\Hwy\Bethel ChfEddieHRd\53927\Data\ACAD\PLAN_TH.dwg

VIEW: H10_F_D0755, H10_F_D1055, H10_H_L5000
XREF: 905_BD02, 905_DES, 905_MAS01

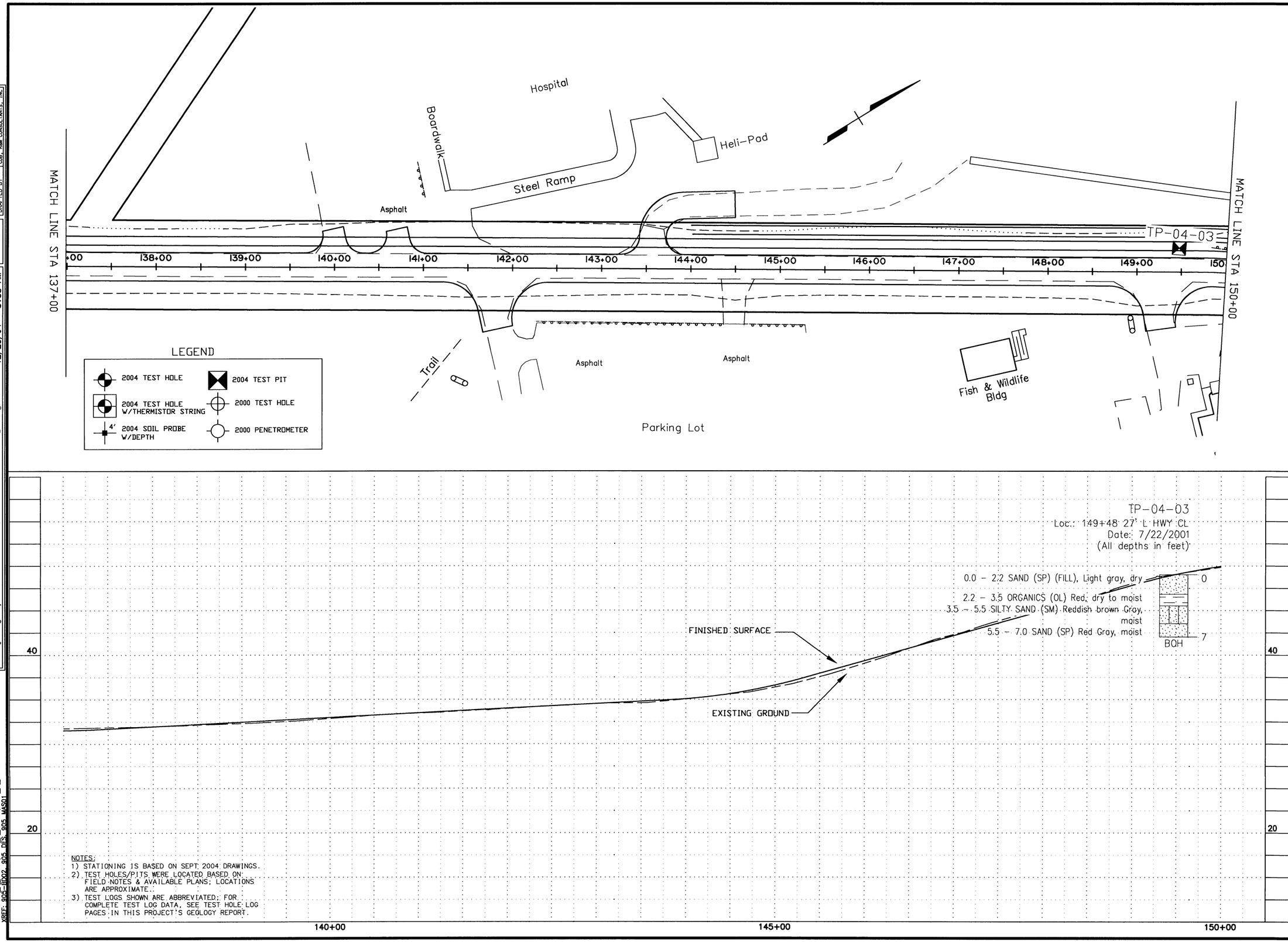

NOTES:
1) STATIONING IS BASED ON SEPT 2004 DRAWINGS.
2) TEST HOLES/PITS WERE LOCATED BASED ON FIELD NOTES & AVAILABLE PLANS; LOCATIONS ARE APPROXIMATE.
3) TEST LOGS SHOWN ARE ABBREVIATED; FOR COMPLETE TEST LOG DATA, SEE TEST HOLE LOG PAGES IN THIS PROJECT'S GEOLOGY REPORT.

SHEET NO.	TOTAL SHEETS
H11	
STATE	YEAR
ALASKA	2004

PROJECT DESIGNATION
STP-0208(9)/53927

ADDENDUM NO.

ATTACHMENT NO.

REVISIONS

NO.	DATE	DESCRIPTION
1	SEPT '04	TEST HOLE/PIT LOCATIONS ADDED BY ADOT&PF

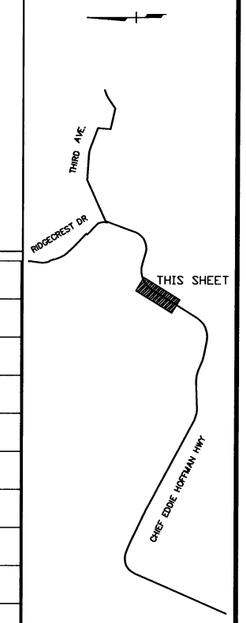

STATE OF ALASKA
DEPARTMENT OF TRANSPORTATION AND PUBLIC FACILITIES

BETHEL, ALASKA
CHIEF EDDIE HOFFMAN REHABILITATION

TEST HOLE LOCATIONS PLAN AND PROFILE
STA 137+00 – 150+00

DRAWING LOCATION	DATE	TIME	SCALE	DESIGNED BY	RDH, R&M CONSULTANTS, INC
H:\Prj_CReg\Hwy\Bethel ChfEddieHRd,53927\Data\ACAD\PLAN_TH.dwg	12/29/04	8:38 AM	1:50	CHECKED BY	RDH, R&M CONSULTANTS, INC
				DRAFTED BY	CDB, R&M CONSULTANTS, INC

VIEW: H11_F_D0755, H11_F_D1055, H11_H_L5000
XREF: 905-BR02, 905_DES, 905_MASQ1

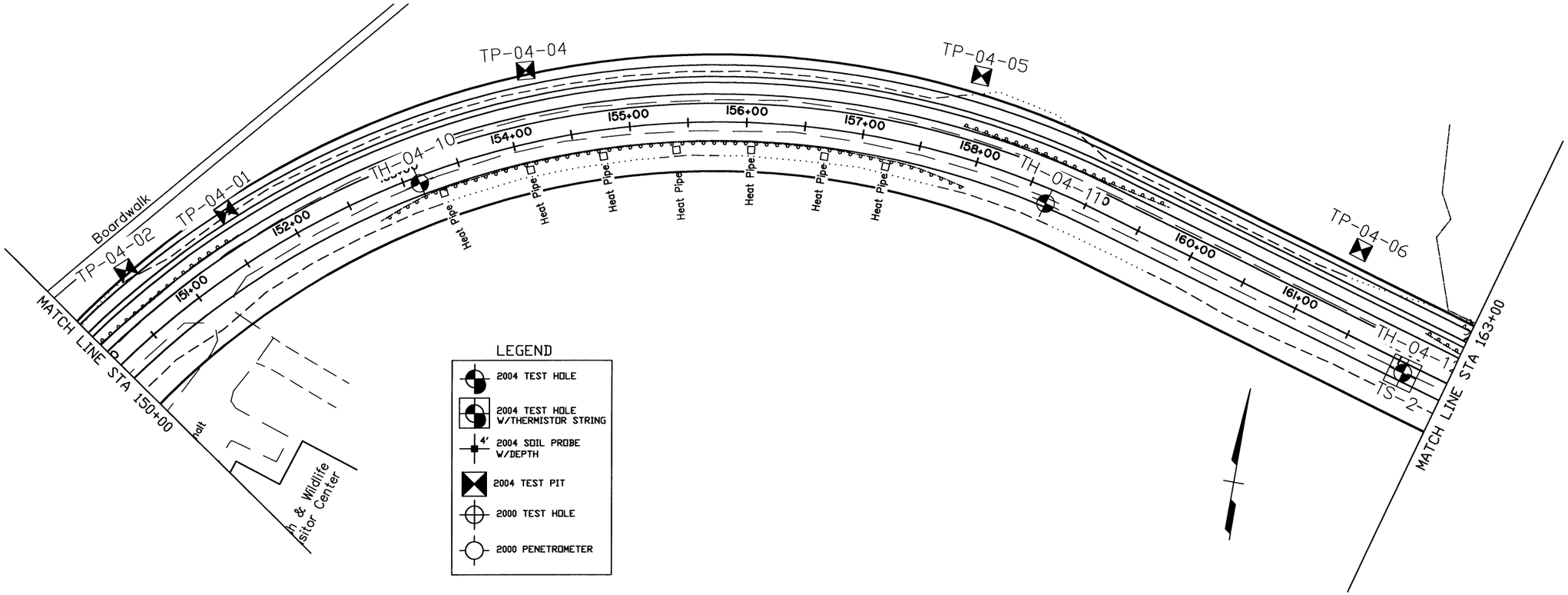

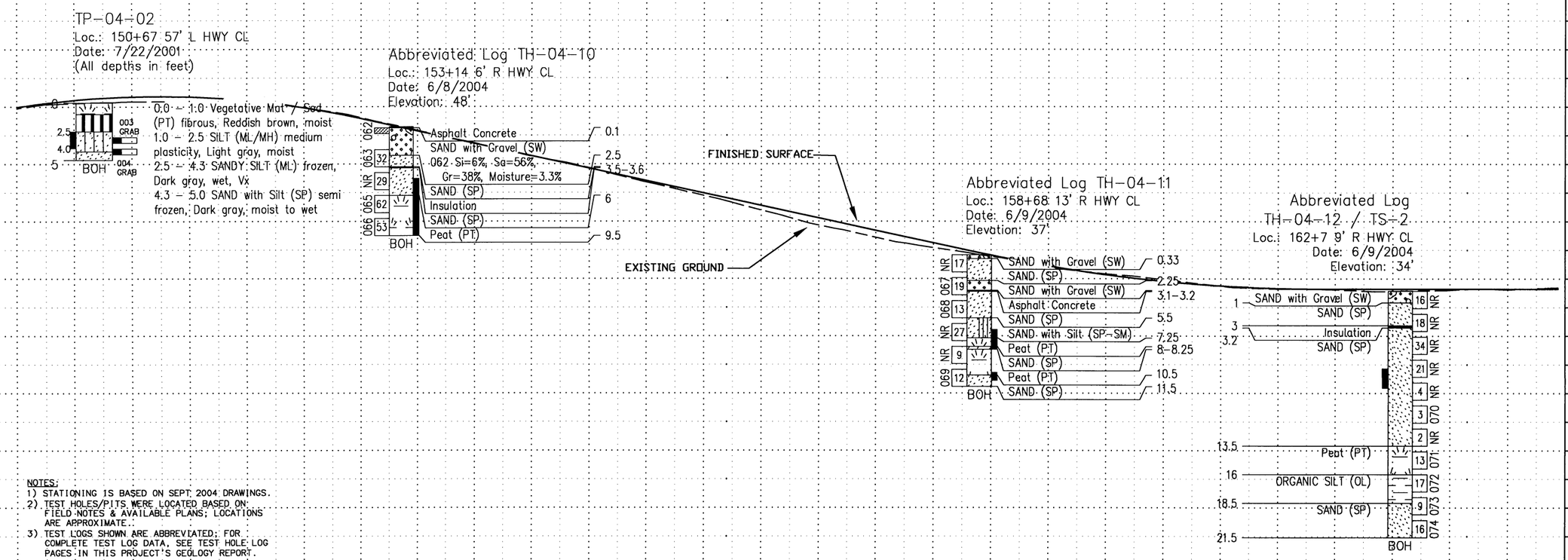

NOTES:
1) STATIONING IS BASED ON SEPT 2004 DRAWINGS.
2) TEST HOLES/PITS WERE LOCATED BASED ON FIELD NOTES & AVAILABLE PLANS; LOCATIONS ARE APPROXIMATE.
3) TEST LOGS SHOWN ARE ABBREVIATED; FOR COMPLETE TEST LOG DATA, SEE TEST HOLE LOG PAGES IN THIS PROJECT'S GEOLOGY REPORT.

SHEET NO.	TOTAL SHEETS
H12	
STATE	YEAR
ALASKA	2004

PROJECT DESIGNATION: STP-0208(9)/53927

ADDENDUM NO.

ATTACHMENT NO.

REVISIONS

NO.	DATE	DESCRIPTION
1	SEPT '04	TEST HOLE/PIT
LOCATIONS ADDED BY ADOT&PF		

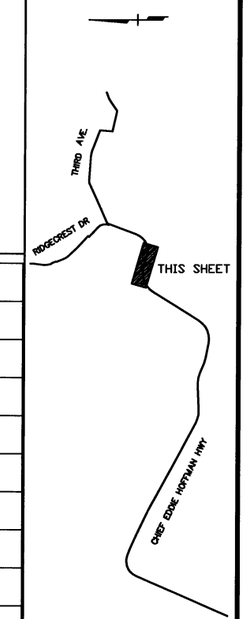

STATE OF ALASKA
DEPARTMENT OF TRANSPORTATION AND PUBLIC FACILITIES

BETHEL, ALASKA
CHIEF EDDIE HOFFMAN REHABILITATION

TEST HOLE LOCATIONS PLAN AND PROFILE STA 150+00 – 163+00

DRAWING LOCATION
H:\Prj_CReg\Hwy\Bethel CnFEddieHRd\53927\Data\ACAD\PLAN_TH.dwg

DATE	TIME	SCALE
12/29/04	8:38 AM	1:50

DESIGNED BY RDH, R&M CONSULTANTS, INC
CHECKED BY RDH, R&M CONSULTANTS, INC
DRAFTED BY CDB, R&M CONSULTANTS, INC

VIEW: H12_F_D0755, H12_F_D1055, H12_H_L5000
XREF: 905_BD02, 905_DES, 905_MAS01

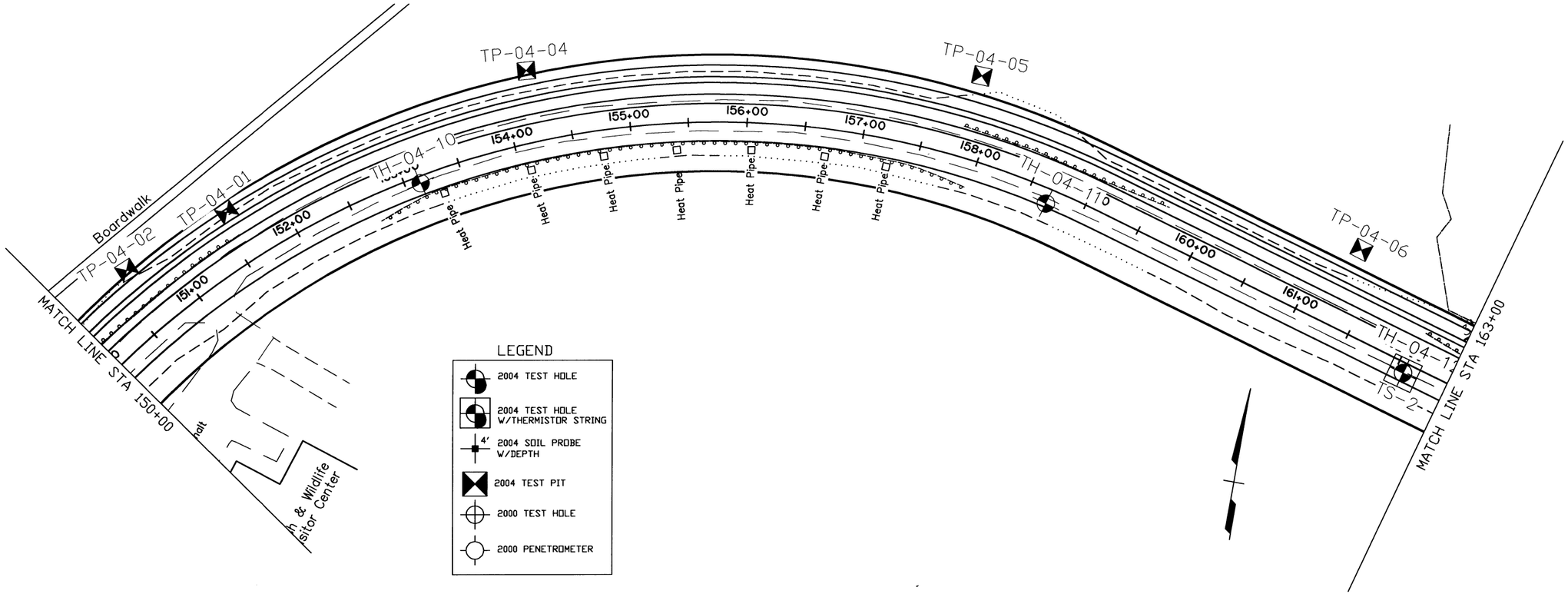

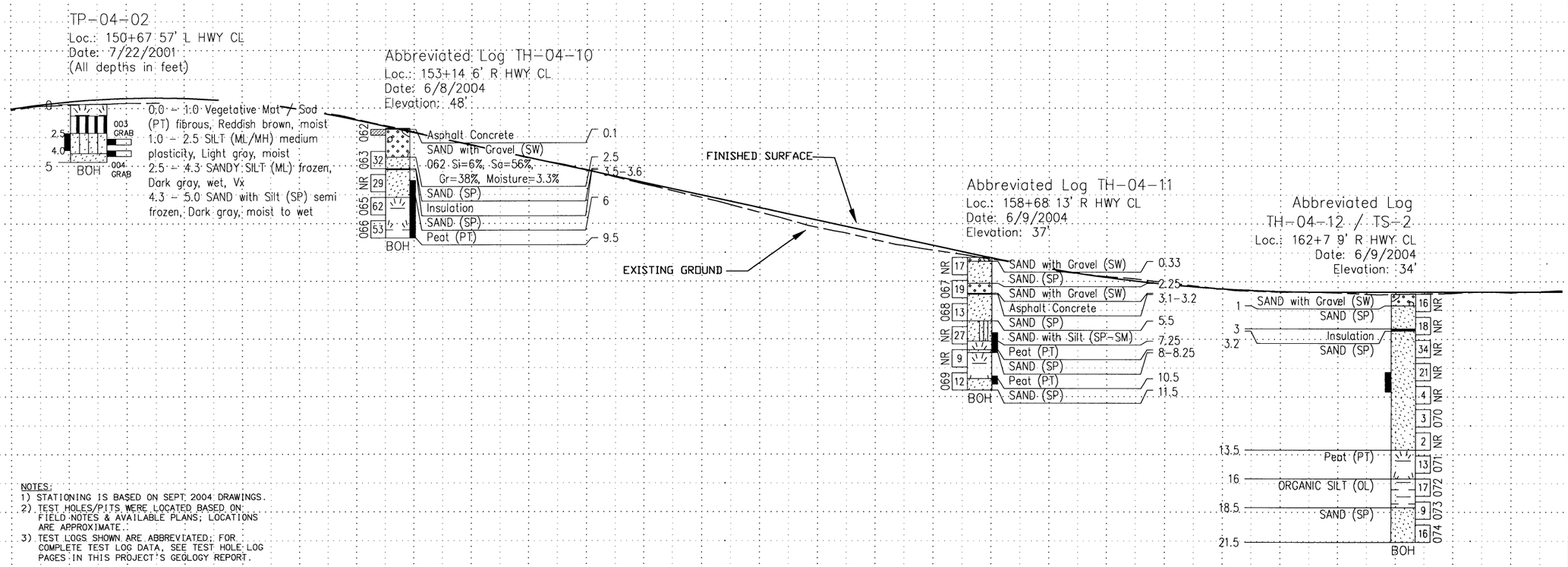

NOTES:
1) STATIONING IS BASED ON SEPT 2004 DRAWINGS.
2) TEST HOLES/PITS WERE LOCATED BASED ON FIELD NOTES & AVAILABLE PLANS; LOCATIONS ARE APPROXIMATE.
3) TEST LOGS SHOWN ARE ABBREVIATED; FOR COMPLETE TEST LOG DATA, SEE TEST HOLE LOG PAGES IN THIS PROJECT'S GEOLOGY REPORT.

SHEET NO.	TOTAL SHEETS
H12	
STATE	YEAR
ALASKA	2004

PROJECT DESIGNATION
STP-0208(9)/53927

ADDENDUM NO.

ATTACHMENT NO.

REVISIONS

NO.	DATE	DESCRIPTION
1	SEPT '04	TEST HOLE/PIT LOCATIONS ADDED BY ADOT&PF

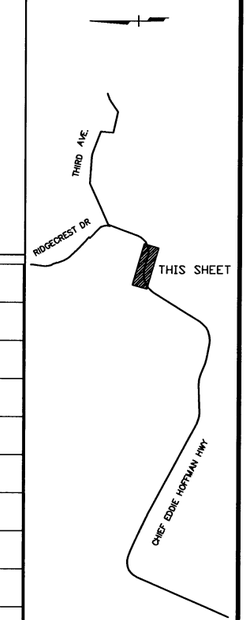

STATE OF ALASKA
DEPARTMENT OF TRANSPORTATION AND PUBLIC FACILITIES

BETHEL, ALASKA
CHIEF EDDIE HOFFMAN REHABILITATION

TEST HOLE LOCATIONS PLAN AND PROFILE STA 150+00 – 163+00

DRAWING LOCATION
H:\Prj_Crg\Hwy\Bethel ChfEddieHRd\53927\Data\ACAD\PLAN_TH.dwg

DATE	TIME	SCALE
12/29/04	8:38 AM	1:50

DESIGNED BY	RDH, R&M CONSULTANTS, INC
CHECKED BY	RDH, R&M CONSULTANTS, INC
DRAFTED BY	COB, R&M CONSULTANTS, INC

VIEW: H12_F_D0755, H12_F_D1055, H12_H_L5000
XREF: 905-BO02, 905-DES, 905-MAS01

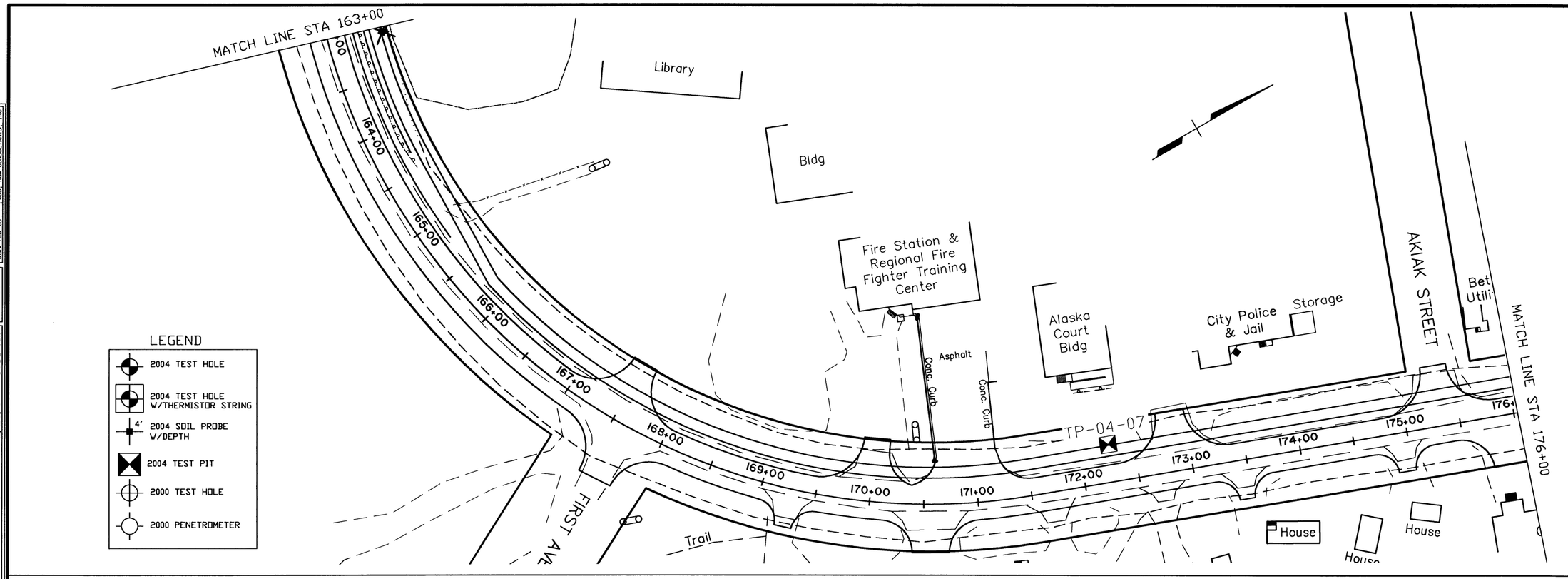

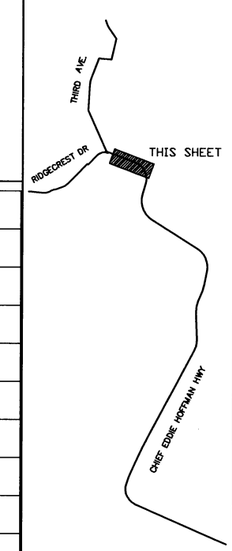

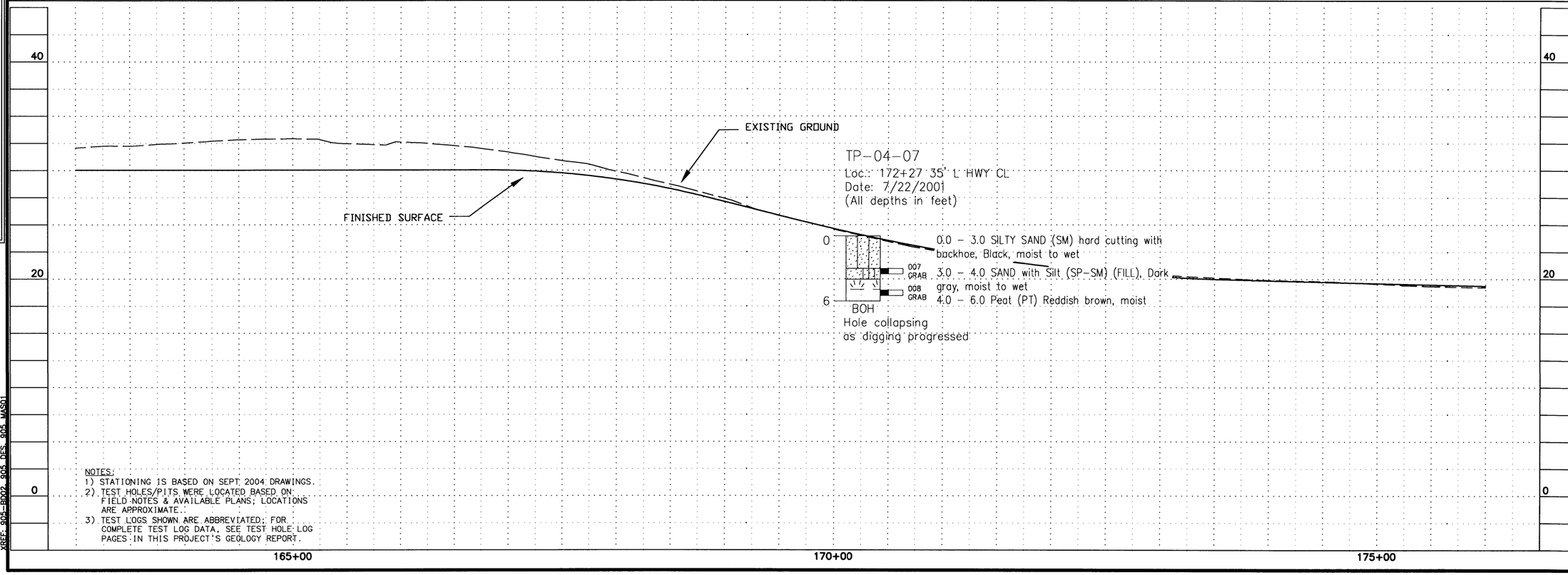

NOTES:
1) STATIONING IS BASED ON SEPT 2004 DRAWINGS.
2) TEST HOLES/PITS WERE LOCATED BASED ON FIELD NOTES & AVAILABLE PLANS; LOCATIONS ARE APPROXIMATE.
3) TEST LOGS SHOWN ARE ABBREVIATED; FOR COMPLETE TEST LOG DATA, SEE TEST HOLE LOG PAGES IN THIS PROJECT'S GEOLOGY REPORT.

SHEET NO.	TOTAL SHEETS
H13	
STATE	YEAR
ALASKA	2004
PROJECT DESIGNATION	
STP-0208(9)/53927	
ADDENDUM NO.	
ATTACHMENT NO.	

REVISIONS

NO.	DATE	DESCRIPTION
1	SEPT '04	TEST HOLE/PIT LOCATIONS ADDED BY ADOT&PF

STATE OF ALASKA
DEPARTMENT OF TRANSPORTATION AND PUBLIC FACILITIES

BETHEL, ALASKA
CHIEF EDDIE HOFFMAN REHABILITATION

TEST HOLE LOCATIONS PLAN AND PROFILE
STA 163+00 – 176+00

DRAWING LOCATION	DATE	TIME	SCALE	DESIGNED BY	RDH, RAM CONSULTANTS, INC
H:\Prj CReg\Hwy\Bethel ChfEddieHRd\53927\Data\ACAD\PLAN_TH.dwg	12/29/04	8:38 AM	1:50	CHECKED BY	RDH, RAM CONSULTANTS, INC
				DRAFTED BY	CDB, RAM CONSULTANTS, INC

VIEW: H13_F_D0755, H13_F_D1055, H13_H_L5000
XREF: 905-BROX, 905_DES, 905_MASQ1

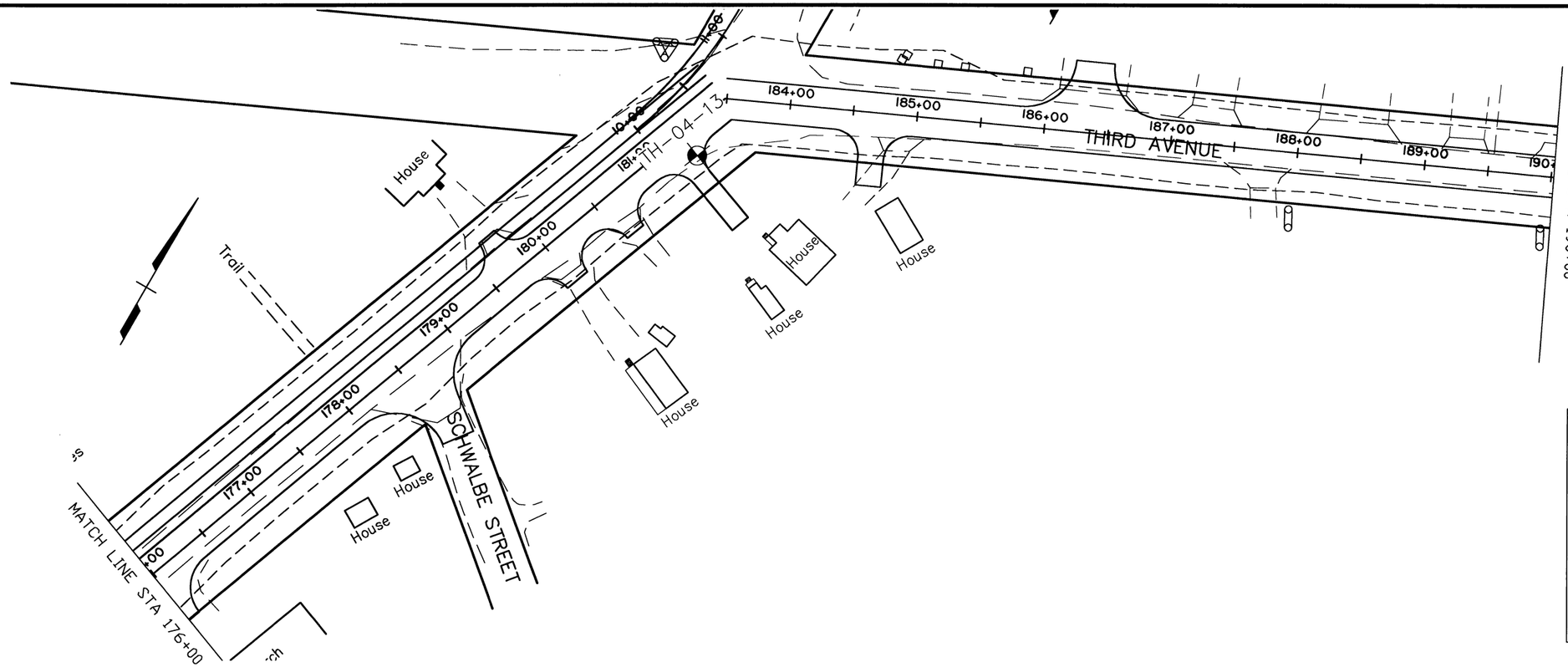

LEGEND

- 2004 TEST HOLE
- 2004 TEST HOLE W/THERMISTOR STRING
- 4' 2004 SOIL PROBE W/DEPTH
- 2004 TEST PIT
- 2000 TEST HOLE
- 2000 PENETROMETER

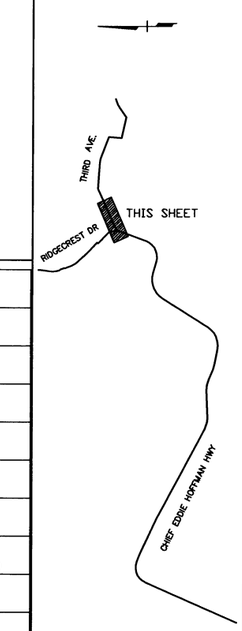

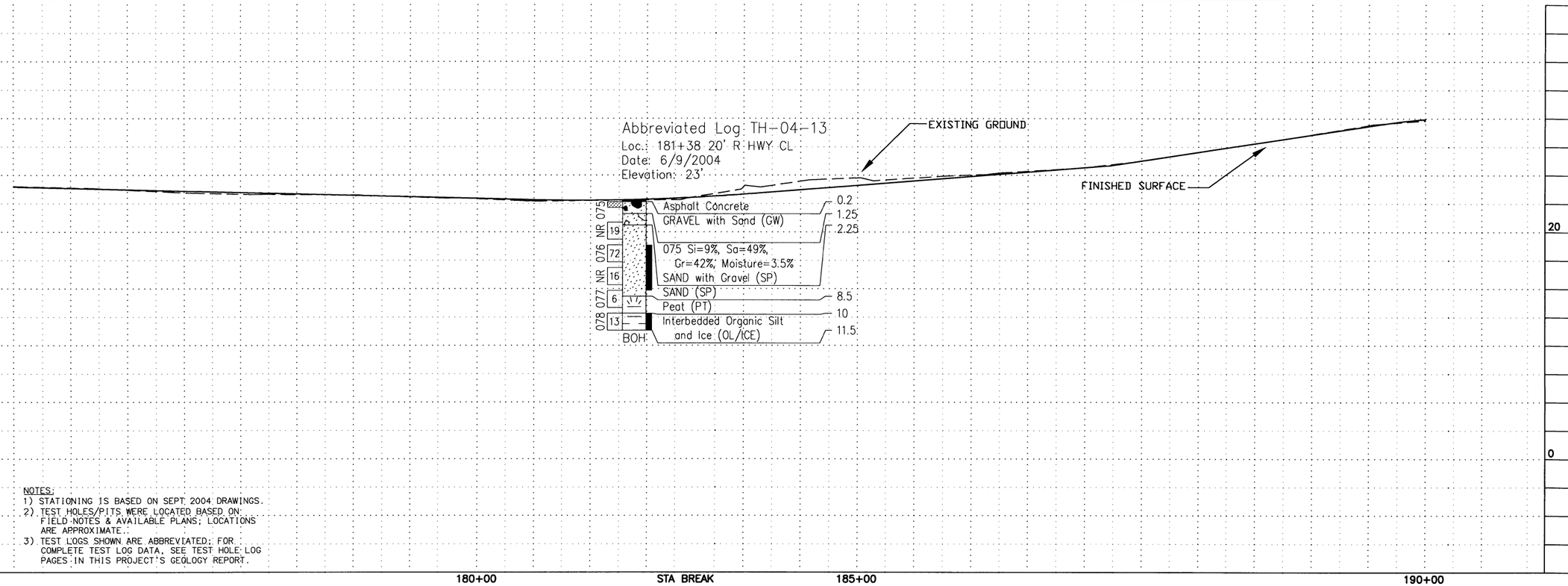

NOTES:
1) STATIONING IS BASED ON SEPT 2004 DRAWINGS.
2) TEST HOLES/PITS WERE LOCATED BASED ON FIELD NOTES & AVAILABLE PLANS; LOCATIONS ARE APPROXIMATE.
3) TEST LOGS SHOWN ARE ABBREVIATED; FOR COMPLETE TEST LOG DATA, SEE TEST HOLE LOG PAGES IN THIS PROJECT'S GEOLOGY REPORT.

SHEET NO.	TOTAL SHEETS
H14	
STATE	YEAR
ALASKA	2004
PROJECT DESIGNATION	
STP-0208(9)/53927	
ADDENDUM NO.	
ATTACHMENT NO.	

REVISIONS

NO.	DATE	DESCRIPTION
1	SEPT '04	TEST HOLE/PIT LOCATIONS ADDED BY ADOT&PF

DRAWING LOCATION	DATE	TIME	SCALE	
H:\Proj CReg\Hwy\Bethel ChfEddieHRd.53927\Data\ACAD\PLAN_TH.dwg	12/29/04	8:38 AM	1:50	DESIGNED BY RDH, R&M CONSULTANTS, INC CHECKED BY RDH, R&M CONSULTANTS, INC DRAFTED BY CDB, R&M CONSULTANTS, INC

VIEW: H14_F_D0755, H14_F_D1055, H14_H_L5000
XREF: 905_B002, 905_DES, 905_MAS01

STATE OF ALASKA
DEPARTMENT OF TRANSPORTATION AND PUBLIC FACILITIES

BETHEL, ALASKA
CHIEF EDDIE HOFFMAN REHABILITATION

TEST HOLE LOCATIONS PLAN AND PROFILE
STA 176+00 – 190+00

SHEET NO.	TOTAL SHEETS
H15	
STATE	YEAR
ALASKA	2004
PROJECT DESIGNATION	
STP-0208(9)/53927	
ADDENDUM NO.	
ATTACHMENT NO.	

REVISIONS

NO.	DATE	DESCRIPTION
1	SEPT '04	TEST HOLE/PIT
LOCATIONS ADDED BY ADOT&PF		

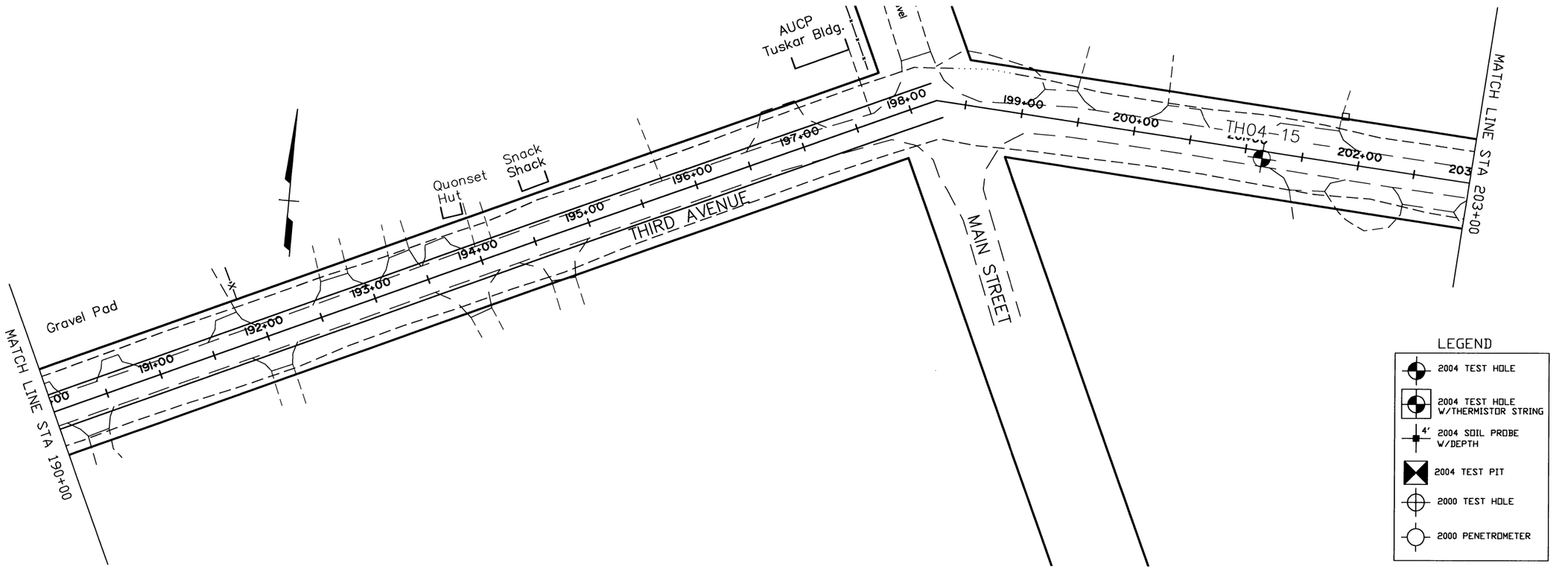

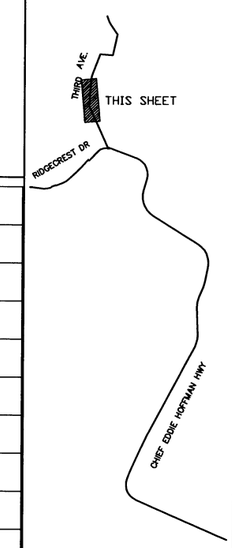

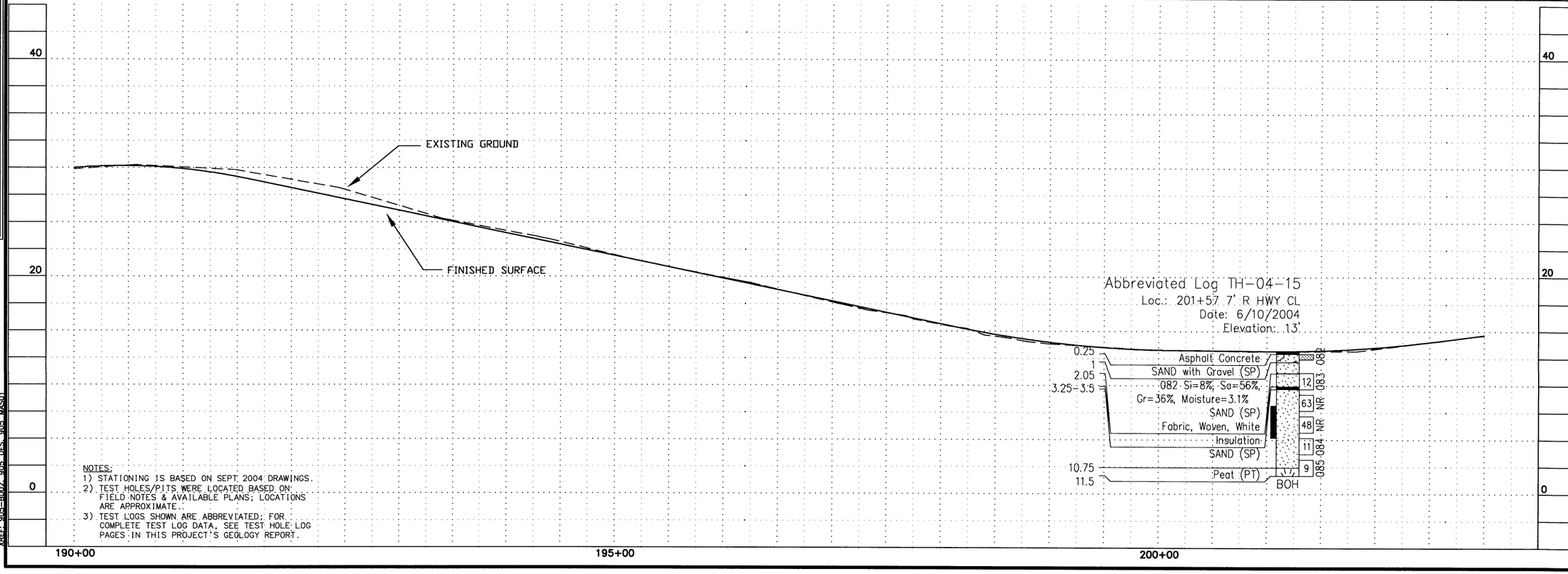

NOTES:
1) STATIONING IS BASED ON SEPT. 2004 DRAWINGS.
2) TEST HOLES/PITS WERE LOCATED BASED ON FIELD NOTES & AVAILABLE PLANS; LOCATIONS ARE APPROXIMATE.
3) TEST LOGS SHOWN ARE ABBREVIATED; FOR COMPLETE TEST LOG DATA, SEE TEST HOLE LOG PAGES IN THIS PROJECT'S GEOLOGY REPORT.

STATE OF ALASKA
DEPARTMENT OF TRANSPORTATION AND PUBLIC FACILITIES

BETHEL, ALASKA
CHIEF EDDIE HOFFMAN REHABILITATION

TEST HOLE LOCATIONS PLAN AND PROFILE
STA 190+00 – 203+00

DRAWING LOCATION	
H:\Prj_CReg\Hwy\Bethel ChfEddieHRd\53927\Data\ACAD\PLAN_TH.dwg	
DESIGNED BY	RDH, R&M CONSULTANTS, INC
CHECKED BY	RDH, R&M CONSULTANTS, INC
DRAFTED BY	CDB, R&M CONSULTANTS, INC
SCALE	1:50
DATE	12/29/04
TIME	8:38 AM

VIEW: H15_F_D0755, H15_F_D1055, H15_H_LL5000
XREF: 905-B002, 905_DES, 905_MAS01

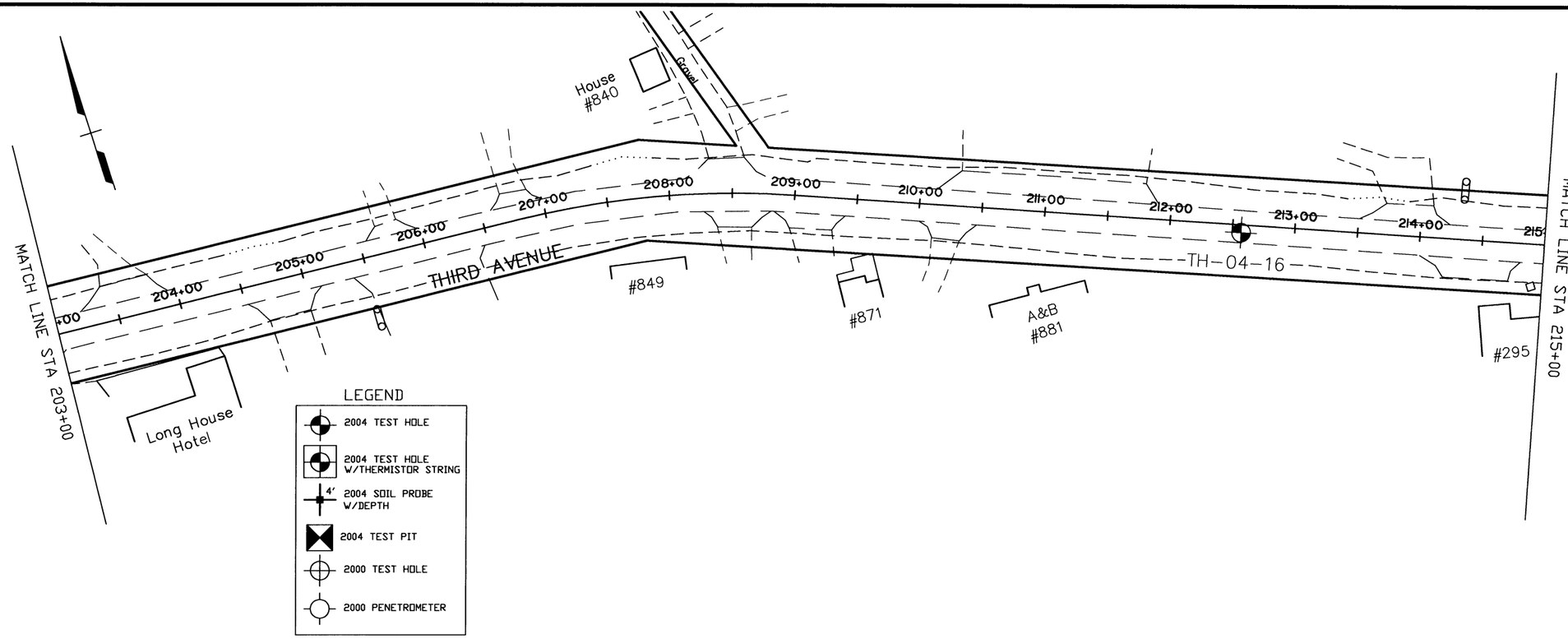

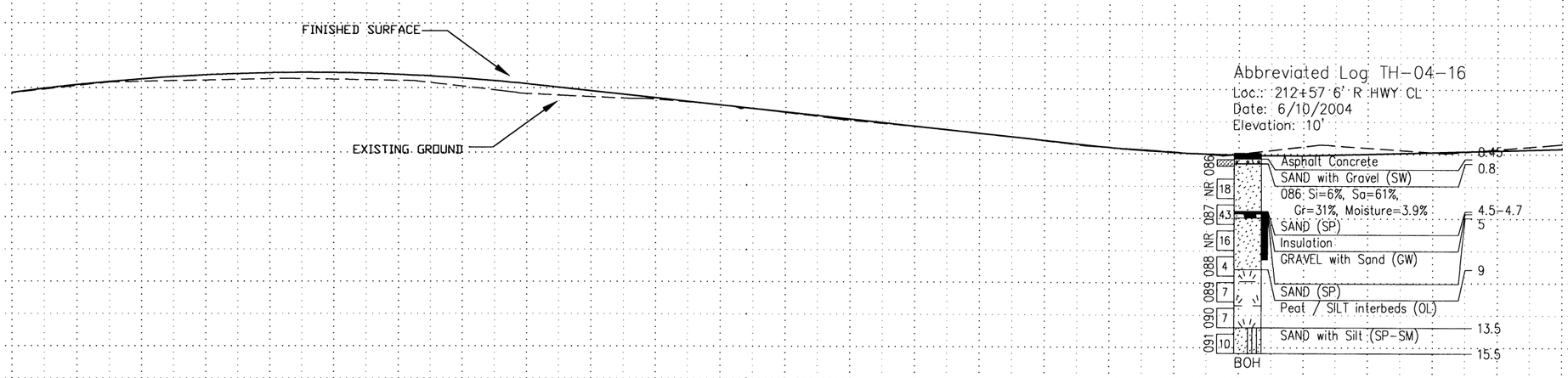

NOTES:
1) STATIONING IS BASED ON SEPT 2004 DRAWINGS.
2) TEST HOLES/PITS WERE LOCATED BASED ON: FIELD NOTES & AVAILABLE PLANS; LOCATIONS ARE APPROXIMATE.
3) TEST LOGS SHOWN ARE ABBREVIATED; FOR COMPLETE TEST LOG DATA, SEE TEST HOLE LOG PAGES IN THIS PROJECT'S GEOLOGY REPORT.

SHEET NO.	TOTAL SHEETS
H16	
STATE	YEAR
ALASKA	2004
PROJECT DESIGNATION	
STP-0208(9)/53927	
ADDENDUM NO.	
ATTACHMENT NO.	

REVISIONS

NO.	DATE	DESCRIPTION
1	SEPT '04	TEST HOLE/PIT LOCATIONS ADDED BY ADOT&PF

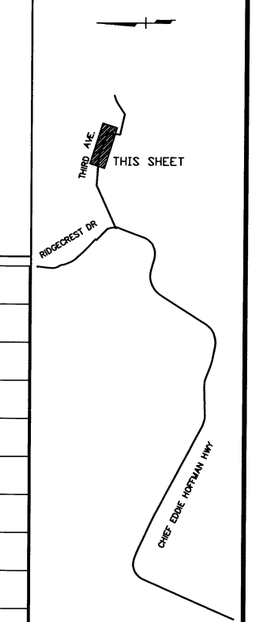

STATE OF ALASKA
DEPARTMENT OF TRANSPORTATION AND PUBLIC FACILITIES

BETHEL, ALASKA
CHIEF EDDIE HOFFMAN REHABILITATION

TEST HOLE LOCATIONS PLAN AND PROFILE STA 203+00 – 215+00

DRAWING LOCATION			
H:\Prj CReg\Hwy\Bethel ChfEddieHRd\53927\Data\ACAD\PLAN_TH.dwg	DESIGNED BY	RDH, R&M CONSULTANTS, INC	
	CHECKED BY	RDH, R&M CONSULTANTS, INC	
	DRAFTED BY	CDB, R&M CONSULTANTS, INC	

DATE	TIME	SCALE
12/29/04	8:38 AM	1:50

VIEW: H16_F_D0755, H16_F_D1055, H16_H_L5000
XREF: 905-BX02, 905_DES, 905_MAS01

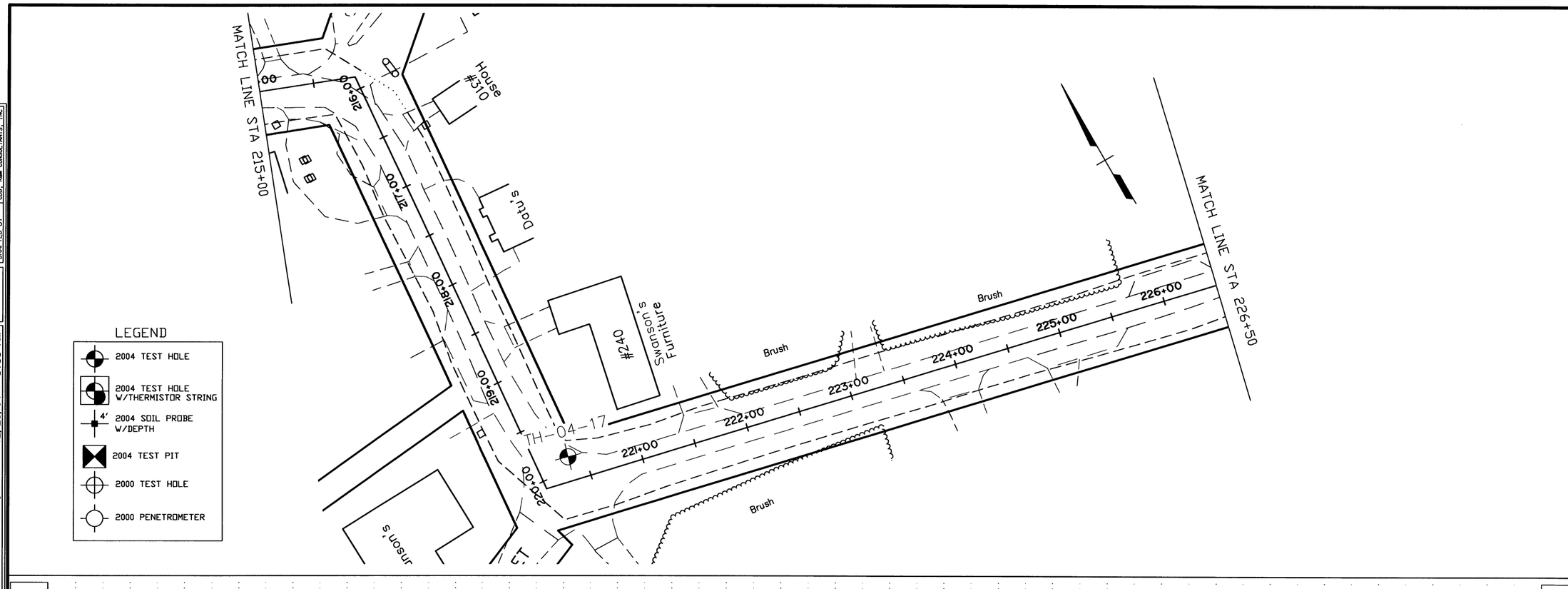

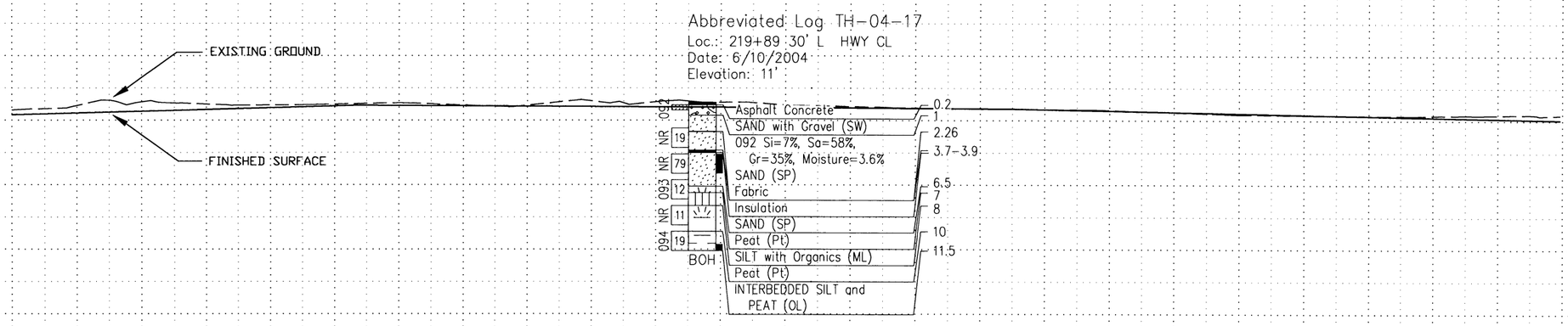

NOTES:
1) STATIONING IS BASED ON SEPT 2004 DRAWINGS.
2) TEST HOLES/PITS WERE LOCATED BASED ON: FIELD NOTES & AVAILABLE PLANS; LOCATIONS ARE APPROXIMATE.
3) TEST LOGS SHOWN ARE ABBREVIATED; FOR COMPLETE TEST LOG DATA, SEE TEST HOLE LOG PAGES IN THIS PROJECT'S GEOLOGY REPORT.

SHEET NO.	TOTAL SHEETS
H17	
STATE	YEAR
ALASKA	2004

PROJECT DESIGNATION
STP-0208(9)/53927

ADDENDUM NO.

ATTACHMENT NO.

REVISIONS

NO.	DATE	DESCRIPTION
1	SEPT '04	TEST HOLE/PIT
LOCATIONS ADDED BY ADOT&PF		

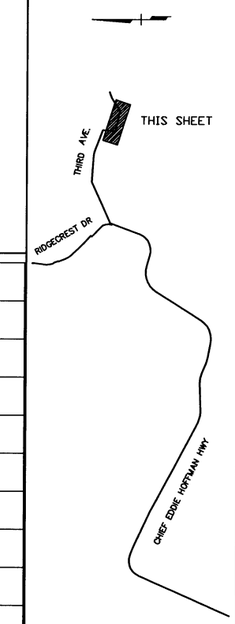

STATE OF ALASKA
DEPARTMENT OF TRANSPORTATION AND PUBLIC FACILITIES

BETHEL, ALASKA
CHIEF EDDIE HOFFMAN REHABILITATION

TEST HOLE LOCATIONS PLAN AND PROFILE
STA 215+00 – 226+50

DATE	TIME	SCALE
12/29/04	8:38 AM	1:50

DESIGNED BY RDH, R&M CONSULTANTS, INC
CHECKED BY RDH, R&M CONSULTANTS, INC
DRAFTED BY CDB, R&M CONSULTANTS, INC

DRAWING LOCATION
H:\Proj\Greg\Hwy\Bethel ChfEddieHRd\53927\Data\ACAD\PLAN_TH.dwg

VIEW: H17_F_D0755, H17_F_D1055, H17_H_L5000
XREF: 905_BD02, 905_DES, 905_MASQ1

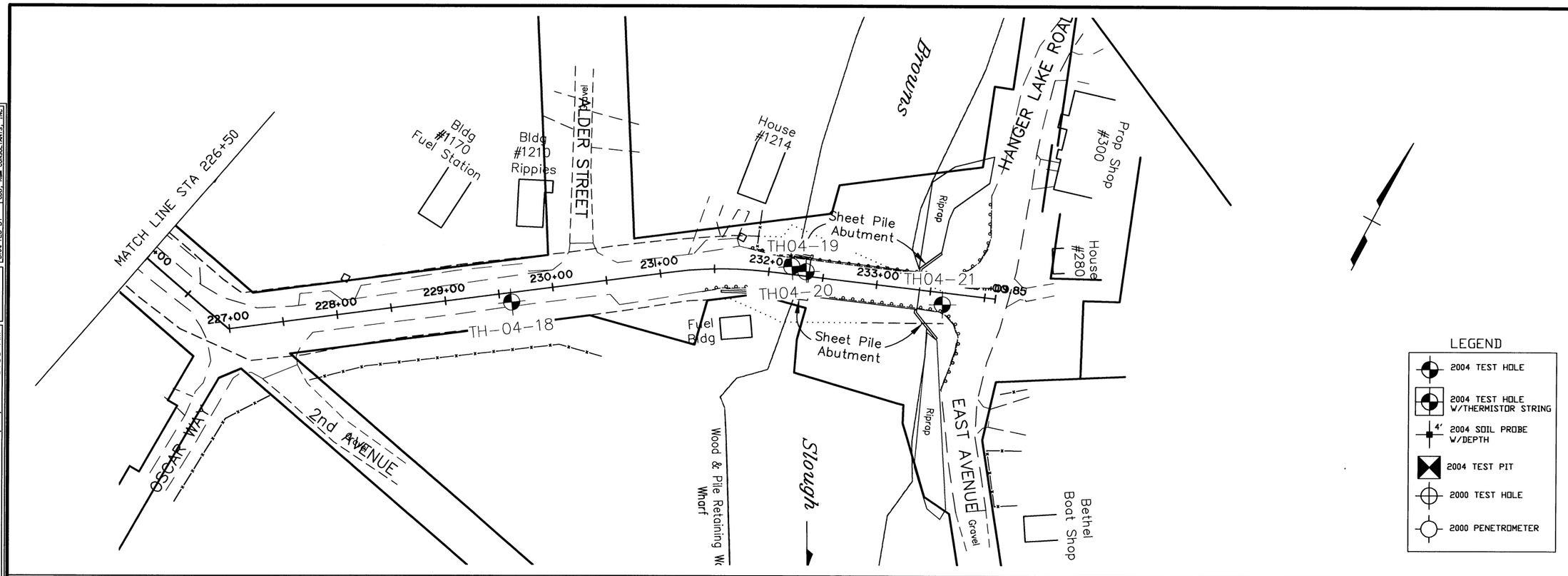

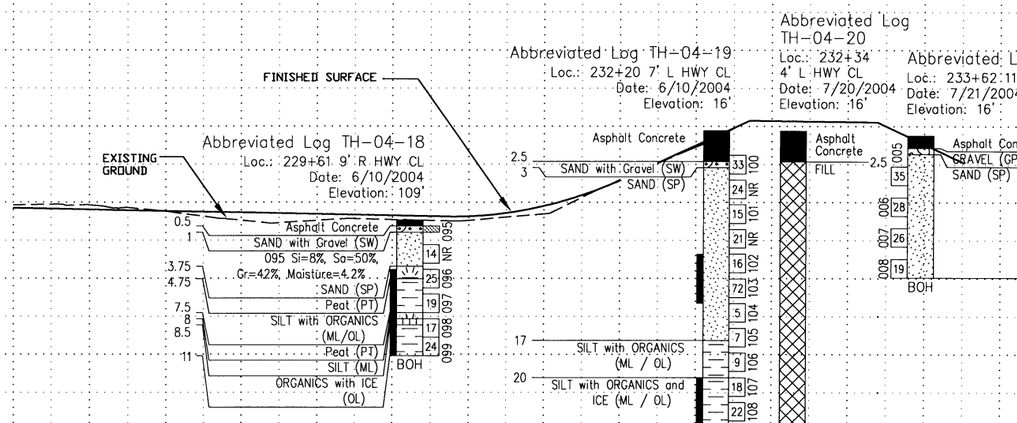

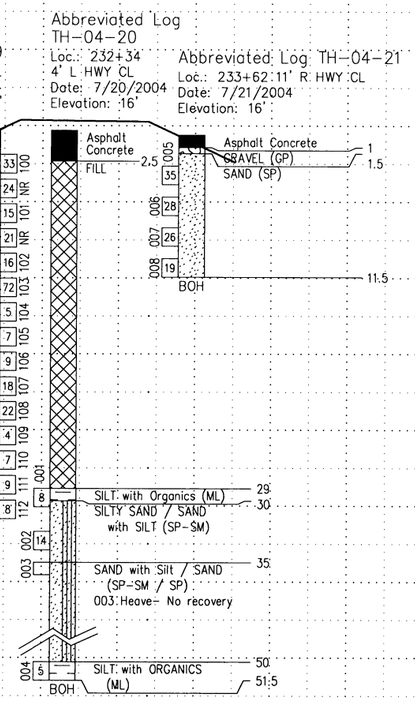

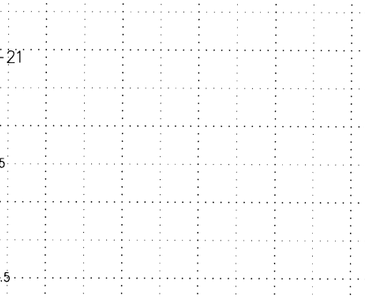

NOTES:
1) STATIONING IS BASED ON SEPT 2004 DRAWINGS.
2) TEST HOLES/PITS WERE LOCATED BASED ON FIELD NOTES & AVAILABLE PLANS; LOCATIONS ARE APPROXIMATE.
3) TEST LOGS SHOWN ARE ABBREVIATED; FOR COMPLETE TEST LOG DATA, SEE TEST HOLE LOG PAGES IN THIS PROJECT'S GEOLOGY REPORT.

230+00

SHEET NO.	TOTAL SHEETS
H18	
STATE	YEAR
ALASKA	2004
PROJECT DESIGNATION	
STP-0208(9)/53927	
ADDENDUM NO.	
ATTACHMENT NO.	

REVISIONS

NO.	DATE	DESCRIPTION
1	SEPT '04	TEST HOLE/PIT LOCATIONS ADDED BY ADOT&PF

STATE OF ALASKA
DEPARTMENT OF TRANSPORTATION AND PUBLIC FACILITIES

BETHEL, ALASKA
CHIEF EDDIE HOFFMAN REHABILITATION

TEST HOLE LOCATIONS PLAN AND PROFILE STA 226+50 – EOP

DRAWING LOCATION	DATE	TIME	SCALE	DESIGNED BY	RBH, R&M CONSULTANTS, INC
H:\Prj_Greg\Hwy\Bethel ChfEddieHRd\53927\Data\ACAD\PLAN_TH.dwg	12/29/04	8:38 AM	1:50	CHECKED BY	RBH, R&M CONSULTANTS, INC
				DRAFTED BY	CDB, R&M CONSULTANTS, INC

VIEW: H18_F_D0755, H18_F_D1055, H18_H_L5000
XREF: 905-BD02, 905_DES, 905_MAS01

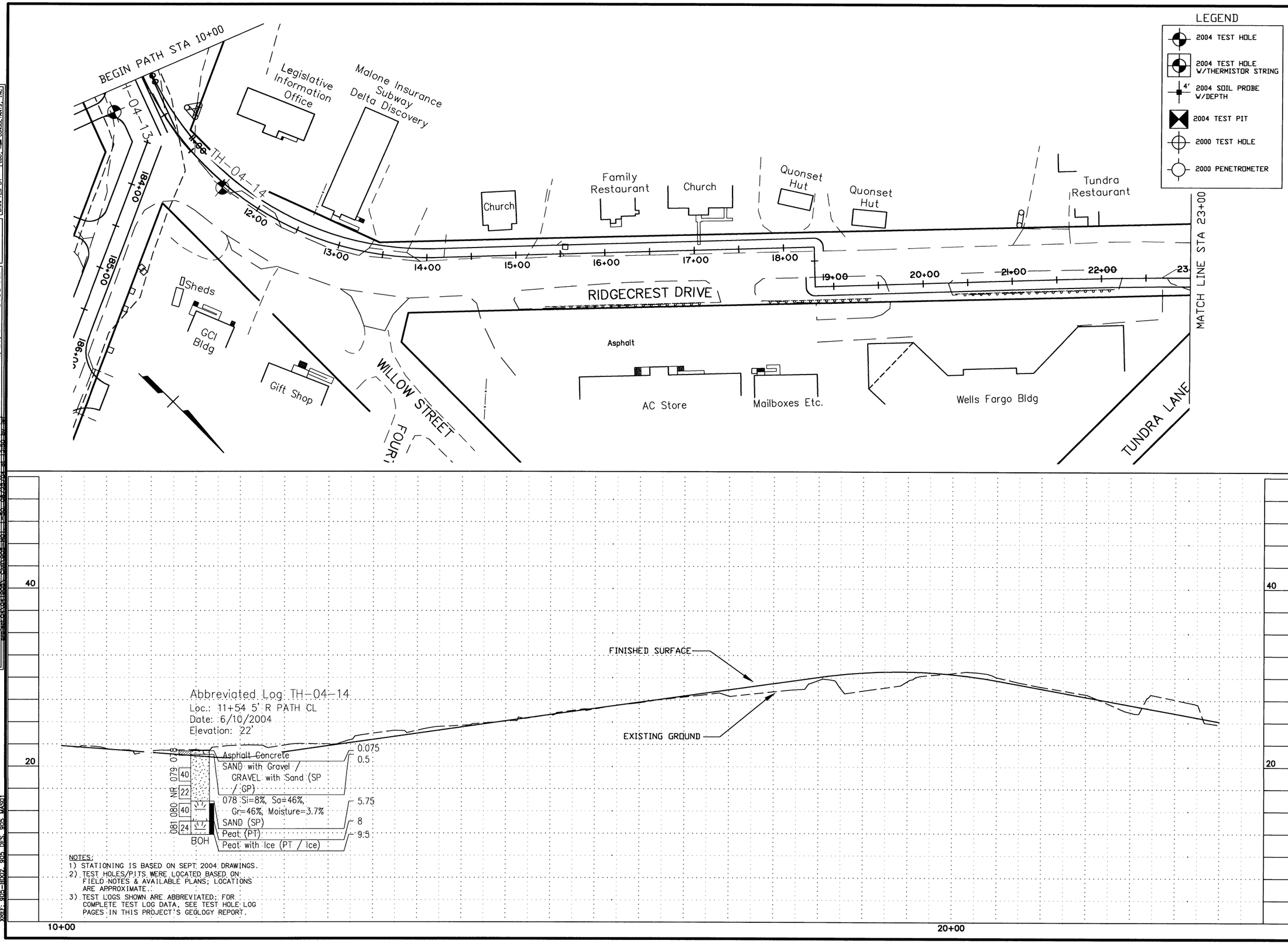

NOTES:
1) STATIONING IS BASED ON SEPT 2004 DRAWINGS.
2) TEST HOLES/PITS WERE LOCATED BASED ON FIELD NOTES & AVAILABLE PLANS; LOCATIONS ARE APPROXIMATE.
3) TEST LOGS SHOWN ARE ABBREVIATED; FOR COMPLETE TEST LOG DATA, SEE TEST HOLE LOG PAGES IN THIS PROJECT'S GEOLOGY REPORT.

SHEET NO.	TOTAL SHEETS
H19	
STATE	YEAR
ALASKA	2004
PROJECT DESIGNATION	
STP-0208(9)/53927	
ADDENDUM NO.	
ATTACHMENT NO.	

REVISIONS

NO.	DATE	DESCRIPTION
1	SEPT '04	TEST HOLE/PIT
LOCATIONS ADDED BY ADOT&PF		

STATE OF ALASKA
DEPARTMENT OF TRANSPORTATION AND PUBLIC FACILITIES

BETHEL, ALASKA
CHIEF EDDIE HOFFMAN REHABILITATION

TEST HOLE LOCATIONS PLAN AND PROFILE
STA 10+00 – 23+00

DRAWING LOCATION		
H:\Proj\Greg\Hwy\Bethel ChfEddieHRd\53927\Data\ACAD\PLAN_TH.dwg		
DATE	TIME	SCALE
12/29/04	8:38 AM	1:50
DESIGNED BY RDH, R&M CONSULTANTS, INC		
CHECKED BY RDH, R&M CONSULTANTS, INC		
DRAFTED BY CDB, R&M CONSULTANTS, INC		

VIEW: R01_F_D0755, R01_F_D1055, R01_H_L5000
XREF: 905-B002, 905, DFS, 905, MAS01

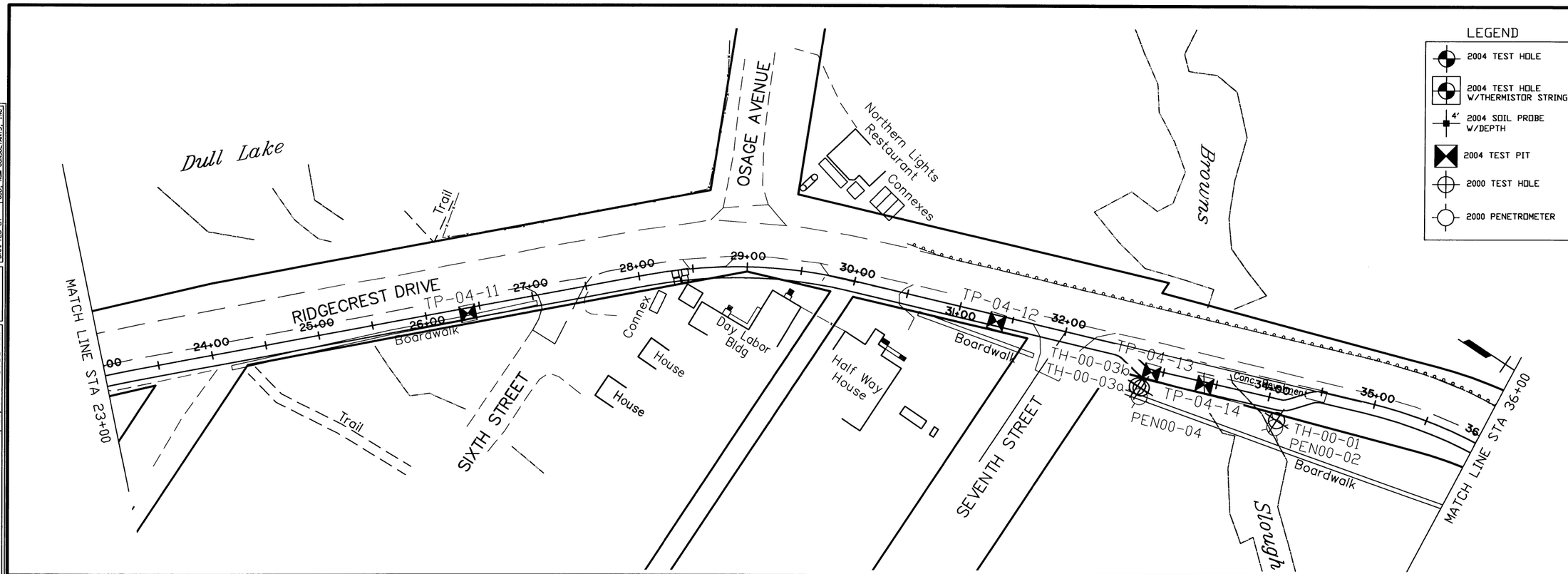

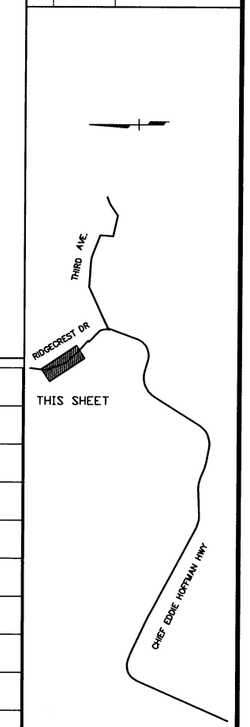

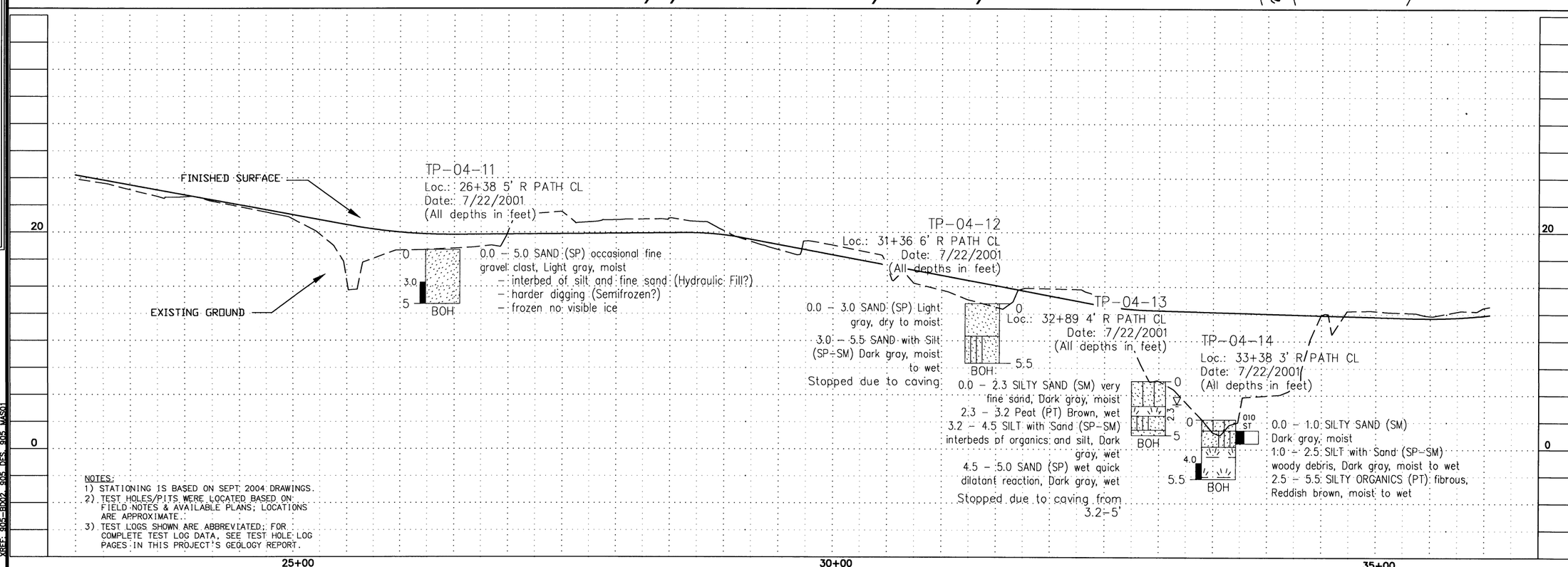

NOTES:
1) STATIONING IS BASED ON SEPT 2004 DRAWINGS.
2) TEST HOLES/PITS WERE LOCATED BASED ON FIELD NOTES & AVAILABLE PLANS; LOCATIONS ARE APPROXIMATE.
3) TEST LOGS SHOWN ARE ABBREVIATED; FOR COMPLETE TEST LOG DATA, SEE TEST HOLE LOG PAGES IN THIS PROJECT'S GEOLOGY REPORT.

SHEET NO.	TOTAL SHEETS
H20	
STATE	YEAR
ALASKA	2004
PROJECT DESIGNATION	
STP-0208(9)/53927	
ADDENDUM NO.	
ATTACHMENT NO.	

REVISIONS

NO.	DATE	DESCRIPTION
1	SEPT '04	TEST HOLE/PIT
LOCATIONS ADDED BY ADOT&PF		

STATE OF ALASKA
DEPARTMENT OF TRANSPORTATION AND PUBLIC FACILITIES

BETHEL, ALASKA
CHIEF EDDIE HOFFMAN REHABILITATION

TEST HOLE LOCATIONS PLAN AND PROFILE STA 23+00 – 36+00

DRAWING LOCATION	DATE	TIME	SCALE
H:\Prj_CReg\Hwy\Bethel Ch\EddieHRd\53927\Data\ACAD\PLAN_TH.dwg	12/29/04	8:38 AM	1:50

DESIGNED BY: RDH, R&M CONSULTANTS, INC
CHECKED BY: RDH, R&M CONSULTANTS, INC
DRAFTED BY: CDB, R&M CONSULTANTS, INC

VIEW: R02_F_D0755, R02_F_D1055, R02_H_L5000
XREF: 905-B002, 905-DES, 905-MAS01

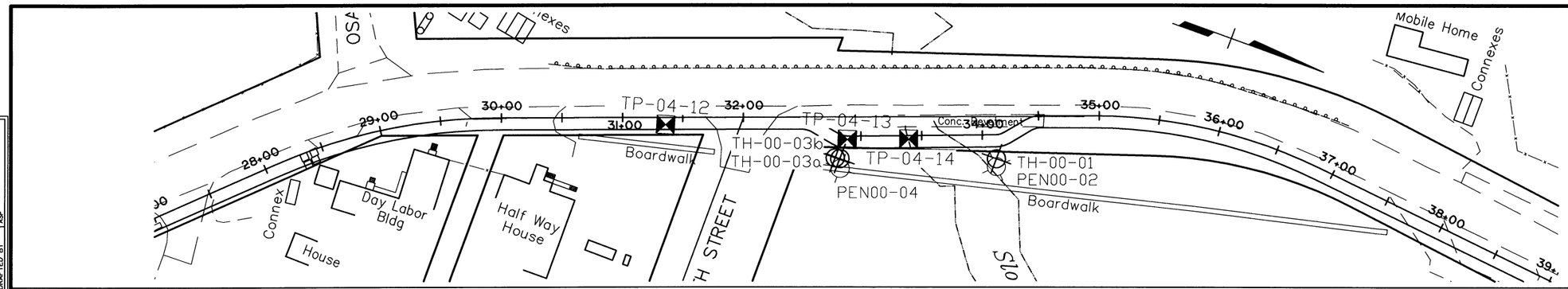

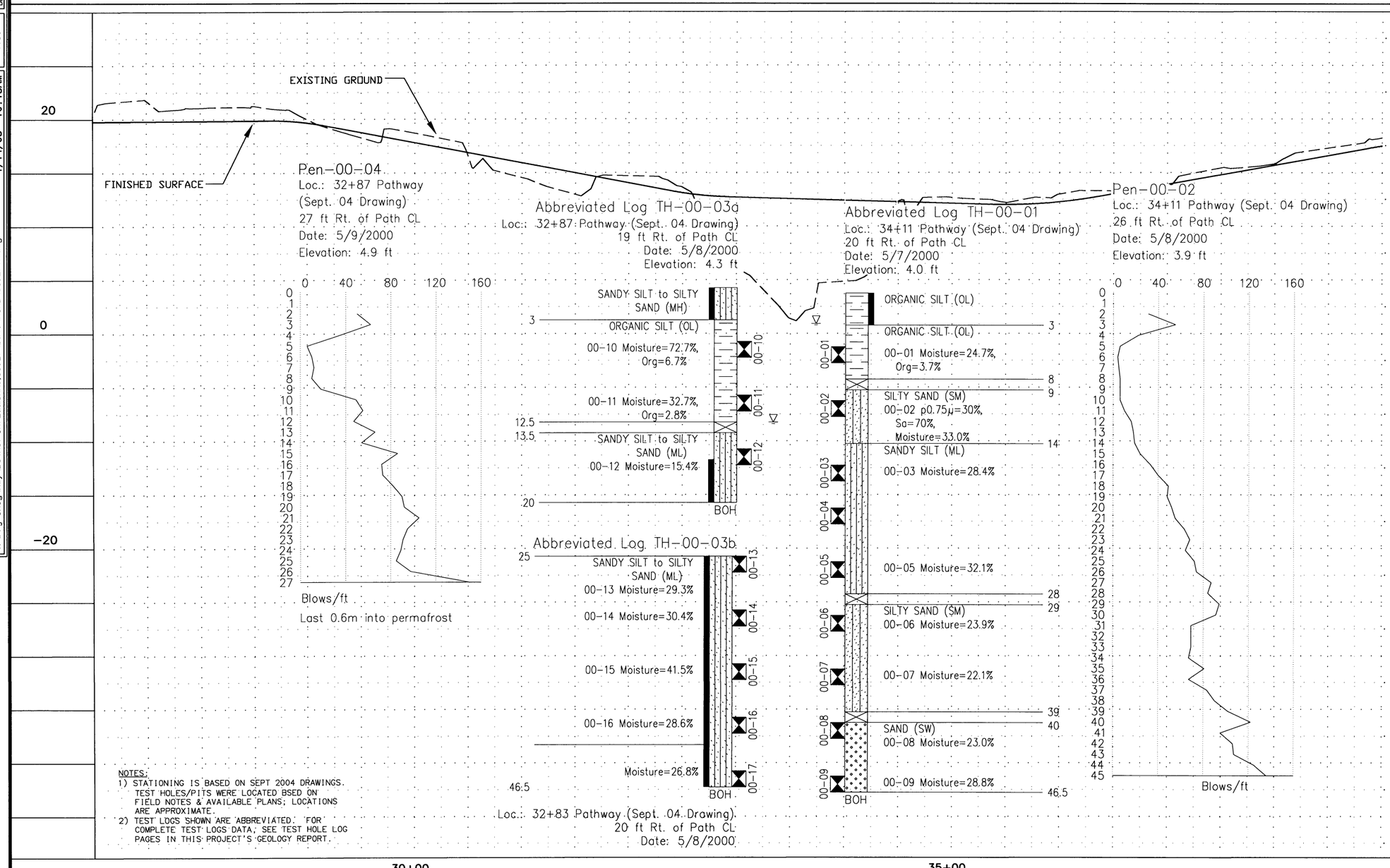

NOTES:
1) STATIONING IS BASED ON SEPT 2004 DRAWINGS. TEST HOLES/PITS WERE LOCATED BSED ON FIELD NOTES & AVAILABLE PLANS; LOCATIONS ARE APPROXIMATE.
2) TEST LOGS SHOWN ARE ABBREVIATED. FOR COMPLETE TEST LOGS DATA, SEE TEST HOLE LOG PAGES IN THIS PROJECT'S GEOLOGY REPORT.

SHEET NO.	TOTAL SHEETS
H20a	
STATE	YEAR
ALASKA	2004
PROJECT DESIGNATION	
53297	
ADDENDUM NO.	
ATTACHMENT NO.	

REVISIONS

NO.	DATE	DESCRIPTION
1	SEPT 04	TEST HOLE LOCATIONS ADDED BY ADOT&PF

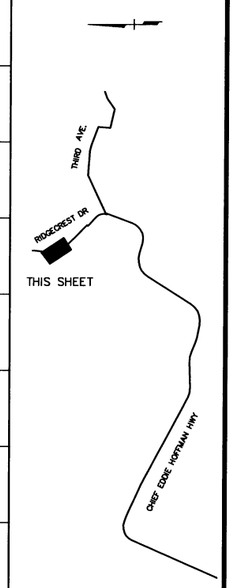

STATE OF ALASKA
DEPARTMENT OF TRANSPORTATION AND PUBLIC FACILITIES

BETHEL, ALASKA
CHIEF EDDIE HOFFMAN REHABILITATION

PLAN & PROFILE WITH TEST HOLE LOCATIONS PEDESTRIAN BRIDGE

DRAWING LOCATION
H:\Prj_CReg\Hwy\Bethel ChfEddieHRd.53927\Data\ACAD\53927TH.dwg

DATE 1/14/05 | TIME 10:15AM | SCALE 1:50
DESIGNED BY USDH
CHECKED BY
DRAFTED BY ASP

APPENDIX B
Year 2004 Test Hole Logs

LOG OF TEST HOLE

HOLE # LEGEND

STATE OF ALASKA DOT&PF
Statewide Materials
Geology Section

PROJECT NUMBER:
PROJECT: *TEST HOLE AND TEST PIT EXPLANATION*

Station / Location: *Hole Location, Station or Coordinates*
Offset: *Offset Location if applicable*
Elevation: *Elevation*

Equipment Type: *Drill Rig*
Drilling Method: *Drilling Method*
Field Crew: *Driller, Helper*

Total Depth: *19.0 feet*
Date: *1/18/2005 -*
Geologist: *Geologist*

Ground Water Data		
Depth in (ft.)	15	15.5
Time	10:00	15:05
Date	1/1/04	1/2/04
Symbol	▼	▽

Weather: This section is for weather notes

Sample Data

Depth (Feet)	Sample Type	Number	Blow Count	Sample	Recovery	N-Value	USCS Classification	Frozen Zone	Soil Graphic
8	SPT	Sample Number	1	X		5			
	SS		2	◆					
	MC		3	◆					
9	GRAB				■				
	AUGER								
10	EB								
	CORE								
11	ST								
	MS								
12	NR			○					
	SNT			⊘					
13	FLD WT			W					
	UNDIST								
14	VANE								
15									
16									
17	SPT	1234	1, 2, 3, 4	X	■	5			
18									
19									

SUBSURFACE MATERIAL

Depth (Feet)	USCS Classification	Soil Graphic	Description	Depth
0			**SOIL GRAPHIC AND SOIL TYPE EXPLANATION** All graphics are generic representations of soil type and do not match soils as seen in-situ.	0.0
	GP		**GRAVEL** (GP)	0.5
1	GW		**GRAVEL** (GW)	1.0
	SP		**SAND** (SP)	1.5
2	SW		**SAND** (SW)	2.0
	ML		**SILT** (ML)	2.5
3	MH		**SILT** (MH)	3.0
	CL		**CLAY** (CL)	3.5
4	CH		**CLAY** (CH)	4.0
			ORGANICS AND PEAT	4.5
5			**Cobble or Boulder Location**	5.0
			ICE Ice or Frozen Soil Interval with Classification (Nf, Vx, ice% etc.)	5.5
6			**BEDROCK**	6.0
			TRANSITIONAL SOIL CHANGE	6.5
7			**SAMPLE DATA EXPLANATION**	7.0
8			Sample Number Standard Penetration Test Split Spoon Sample 1.5" ID x 2" OD with Uncorrected N-Value	
			Split Spoon Sample 2" ID x 2.5" OD	
			Split Spoon Sample 2.5" ID x 3" OD	
9			Grab Sample with Recovered Percentage	
			Auger Cuttings Grab Sample	
10			Excavator Bucket Grab Sample	
			Rock Core	
11			Shelby Tube thin wall 3" OD	
			Modified Shelby Tube (size)	
12			No Recovery	
			Sample Not Tested or Retained	
13			Field Weighted Sample	
			Undisturbed Sample	
14			Vane Shear Test and Results Report:, Vane Shear (pcf/kPa)=(Undisturbed Soil), Remolded Vane Shear (pcf/kPa)=(Disturbed Soil)	
15			Groundwater level while drilling	15.0
			Groundwater level after drilling	15.5
16			**LABORATORY RESULTS EXPLANATION**	16.0
17			1234 p200=(passing #200 sieve)%, p0.75µm=(passing 0.075µm sieve)%, Si=(passing #200 sieve)%, Sa=(retained between #200 - #4 sieve)%, Gr=(retained between #4 - 3" sieve)%, +3"=(retained between 3" -12" sieve)%, +12"=(>12" sieve)%, Moisture=(raw)%, Org=(organic content)%, PI=(Plastic Index, NP=nonplastic), LL=(Liquid Limit, NV=No Value), Degradation=#, LA Abrasion=#%, Max. Dry Dens=#pcf, Opt. Moisture=#%, Sodium Sulfate Soundness (coarse)=#%, Sodium Sulfate Soundness (fine)=#%, AASHTO=(Soil Class)	
19		BOH 19	Notes: This section is for drilling notes and additional equipment descriptions	19.0

☒ CME Auto Hammer ☐ Cathead Rope Method ☒ 140 lb. hammer with 30 in. drop ☐ 340 lb. hammer with 30 in. drop

A USCS LOG OF TEST HOLE LOGKEYPAGE.GPJ 2004TEMPLATE.GDT 1/18/05

LOG OF TEST HOLE

HOLE # TH-04-01

STATE OF ALASKA DOT&PF
Central Region Materials
Geology Section

PROJECT NUMBER: *53927*
PROJECT: *Chief Eddie Hoffman Hwy and Separated Pathway*

Station / Location: *46+47*
Offset: *12' R HWY CL*
Elevation:

Equipment Type: *Mobile B-50*
Drilling Method: *Hollow-Stem Auger*
Field Crew: *G. Hamrick / J. Love*

Total Depth: *15.5 feet*
Date: *6/5/2004 - 6/5/2004*
Geologist: *C. Roso*

Weather: Windy 50's

Ground Water Data		
Depth in (ft.)		
Time		
Date		
Symbol		

Depth (Feet)	Sample Type	Number	Blow Count	Sample	Recovery	N-Value	USCS Classification	Frozen Zone	Soil Graphic	SUBSURFACE MATERIAL	
0										**Asphalt Concrete** 2" thick, poor condition, Black	0.0
	GRAB	001					SW			**SAND with Gravel** (SW) with gravel, fine gravel to 3/4", Dark gray, dry to moist, medium dense 001 Si=6%, Sa=50%, Gr=44%, Moisture=2.7%	0.2
1											
2			21								2.5
3	SPT	002	18 6				SP			**SAND** (SP) fine grained, occasional gravel clast, Gray, dry to moist, dense	3.8
4										**Insulation** 4" thick, Pink	4.0
			22				SP			**SAND with Gravel** (SP) well rounded gravel to 1" dia., Light gray, moist to wet	
5	SPT	003	45 16				SP			**SAND** (SP) fine grained with occasional coarse grains, Dark gray, moist to wet	5.0
6											
			6								
7	SPT	004	4 10			14					
8											
			7								
9	SPT	005	7 8			15					
10										- dilatant reaction, wet	10.0
			5								
11	SPT	006	4 2							**Peat** fibrous, Dark reddish brown, wet	11.0
12											
			2								
13	SPT	007	3 3			6					
14											14.0
			2				SP/OL			**SAND with ORGANIC PEAT** (SP/OL) interbedded fine sand and organics, very loose/soft, Light gray and Dark red, wet	
15	SPT	008	2 3			5					
									BOH 15.5		15.5

Notes:

☐ CME Auto Hammer ☒ Cathead Rope Method ☒ 140 lb. hammer with 30 in. drop ☐ 340 lb. hammer with 30 in. drop

A USCS LOG OF TEST HOLE CEHH2004.GPJ 2004TEMPLATE.GDT 1/10/05

LOG OF TEST HOLE

HOLE # TH-04-02

STATE OF ALASKA DOT&PF
Central Region Materials
Geology Section

PROJECT NUMBER: *53927*
PROJECT: *Chief Eddie Hoffman Hwy and Separated Pathway*

Station / Location: *48+50*
Offset: *7' R HWY CL*
Elevation:

Equipment Type: *Mobile B-50*
Drilling Method: *Hollow-Stem Auger*
Field Crew: *G. Hamrick / J. Love*

Total Depth: *13.5 feet*
Date: *6/7/2004 - 6/7/2004*
Geologist: *C. Roso*

Ground Water Data		
Depth in (ft.)		
Time		
Date		
Symbol		

Weather: Windy 50's

Depth (Feet)	Sample Type	Number	Blow Count	Sample	Recovery	N-Value	USCS Classification	Frozen Zone	Soil Graphic	SUBSURFACE MATERIAL
0	GRAB	009					SP			**Asphalt Concrete** 1.5" thick, Black (0.0–0.2); **SAND with Gravel** (SP) base course for AC pavement, Dark gray, dry to moist 009 Si=8%, Sa=52%, Gr=40%, Moisture=2.8%
1–2	SPT	010	17 16 14	X			SP			**SAND** (SP) fine grained, frozen, Light gray, dry to moist (1.3–4.5)
3–4	SPT	011	4 5 12	X		17				
5										**Insulation** 4" thick, Pink (4.5–4.8)
5–6	SPT	012	5 6 8	X		14	SP			**SAND** (SP) Light gray, dry to moist (4.8–7.0)
7–8	SPT	013	12 32 22	X		54	SP-SM			**SAND with Silt** (SP-SM) interbeds 1/8" silt layers, Light gray, dry to moist (7.0–10.0)
9–10	SPT	014	7 6 5	X						**Peat** Dark reddish brown, moist to wet (10.0–11.5)
11–12							SP			**SAND** (SP) very fine grained, Dark gray, wet (11.5–13.5)
12–13	SPT	015	2 2 2	X		4				
									BOH 13.5	Notes:

☐ CME Auto Hammer ☒ Cathead Rope Method ☒ 140 lb. hammer with 30 in. drop ☐ 340 lb. hammer with 30 in. drop

Sheet Number 1 of 1

A USCS LOG OF TEST HOLE CEHH2004.GPJ 2004TEMPLATE.GDT 1/10/05

LOG OF TEST HOLE

HOLE # TH-04-03

STATE OF ALASKA DOT&PF
Central Region Materials
Geology Section

PROJECT NUMBER: *53927*
PROJECT: *Chief Eddie Hoffman Hwy and Separated Pathway*

Station / Location: *50+48*
Offset: *9' R HWY CL*
Elevation:

Equipment Type: *Mobile B-50*
Drilling Method: *Hollow-Stem Auger*
Field Crew: *G. Hamrick / J. Love*

Total Depth: *14.0 feet*
Date: *6/7/2004 - 6/7/2004*
Geologist: *C. Roso*

Weather: Windy 50's

Ground Water Data		
Depth in (ft.)		
Time		
Date		
Symbol		

Depth (Feet)	Sample Type	Number	Blow Count	Sample	Recovery	N-Value	USCS Classification	Frozen Zone	Soil Graphic	SUBSURFACE MATERIAL
0	GRAB	016					SP			**Asphalt Concrete** 1" thick, Black (0.0–0.1)
							SP			**SAND with Gravel** (SP) fine sand, medium gravel, dense, frozen, Light gray, dry to moist (0.1–0.6)
1										016 Si=5%, Sa=43%, Gr=42%, Moisture=3.1%
										SAND (SP) very fine sand, medium dense, Light gray, dry to moist
2										
3	SPT	017	15 16 19	X		35				
4										
5										- very fine sand with silt interbeds (5.0)
6	SPT	018	9 9 13	X		22				
7										
										7.6
8	SPT	019	8 17 22	X			PT OL			**Peat** (PT) woody, fibrous, Reddish brown (7.8) **ORGANICS with Silt** (OL) with silt amorphous, Reddish brown
9										9.0
							SP			**SAND** (SP) very fine grained, Dark gray
10										10.1
							PT			**Peat** (PT) fibrous, Reddish brown (10.3)
11	SPT	020	5 5 5	X			SP			**SAND** (SP) very fine grained, medium dense, Light gray, moist to wet
12										
13	SPT	021	8 9 9	X		18				
14									BOH 14	14.0

Notes:

☐ CME Auto Hammer ☒ Cathead Rope Method ☒ 140 lb. hammer with 30 in. drop ☐ 340 lb. hammer with 30 in. drop

Sheet Number 1 of 1

A USCS LOG OF TEST HOLE CEHH2004.GPJ 2004TEMPLATE.GDT 1/10/05

LOG OF TEST HOLE

HOLE # TH-04-04

STATE OF ALASKA DOT&PF
Central Region Materials
Geology Section

PROJECT NUMBER: *53927*
PROJECT: *Chief Eddie Hoffman Hwy and Separated Pathway*

Station / Location: *52+32*
Offset: *8' R HWY CL*
Elevation:

Equipment Type: *Mobile B-50*
Drilling Method: *Hollow-Stem Auger*
Field Crew: *G. Hamrick / J. Love*

Total Depth: *4.0 feet*
Date: *6/7/2004 - 6/7/2004*
Geologist: *C. Roso*

Weather: Windy 50's

Ground Water Data		
Depth in (ft.)		
Time		
Date		
Symbol		

Depth (Feet)	Sample Type	Number	Blow Count	Sample	Recovery	N-Value	USCS Classification	Frozen Zone	Soil Graphic	SUBSURFACE MATERIAL	
0										**Asphalt Concrete** 6" thick, 1" & 5" lift	0.0
	GRAB	022					SP			**SAND with Gravel** (SP) Light gray, moist, dense	0.5
1							SP			022 Si=8%, Sa=47%, Gr=45%, Moisture=2.3%	1.0
										SAND (SP) Light gray, moist, dense	
2			17								
3	SPT	023	20			39					
			19								
4									BOH 4	**Boulder???** Large solid, stopped the drill and deviated the drill stem to the right 6"	3.8 4.0

Notes:
Stopped drilling due to angle and refusal

☐ CME Auto Hammer ☒ Cathead Rope Method ☒ 140 lb. hammer with 30 in. drop ☐ 340 lb. hammer with 30 in. drop

Sheet Number 1 of 1

A USCS LOG OF TEST HOLE CEHH2004.GPJ 2004TEMPLATE.GDT 1/10/05

LOG OF TEST HOLE

HOLE # TH-04-05 / TS-1

STATE OF ALASKA DOT&PF
Central Region Materials
Geology Section

PROJECT NUMBER: *53927*
PROJECT: *Chief Eddie Hoffman Hwy and Separated Pathway*

Station / Location: *52+6*
Offset: *HWY CL*
Elevation:

Equipment Type: *Mobile B-50*
Drilling Method: *Hollow-Stem Auger*
Field Crew: *G. Hamrick / J. Love*

Total Depth: *26.0 feet*
Date: *6/7/2004 - 6/8/2004*
Geologist: *C. Roso*

Weather: 70°

Ground Water Data		
Depth in (ft.)		
Time		
Date		
Symbol		

Depth (Feet)	Sample Type	Number	Blow Count	Sample	Recovery	N-Value	USCS Classification	Frozen Zone	Soil Graphic	SUBSURFACE MATERIAL	Depth
0										**Asphalt Concrete** 6" thick, 2 lifts	0.0
	GRAB	024					SP			**SAND with Gravel** (SP) fine sand, medium gravel, Light olive brown, dry to moist, medium dense 024 Si=6%, Sa=50%, Gr=44%, Moisture=2%	0.5
1.5							SP			**SAND** (SP) fine grained (FILL), Light gray, dry to moist	1.5
2	SPT	025	17 17 50/3"								
3.5							GP			**GRAVEL** (GP) gravel layer (FILL)	3.5
3.7							SP			**SAND** (SP) very fine sand, Light gray, dry to moist	3.7
4	SPT	026	6 7 20								
5.0							Pt			**Peat** (Pt) woody, fibrous, well compacted, occasional fine silt layer <5% of volume estimated, Dark reddish brown	5.0
5.8							SP			**SAND** (SP) Gray	5.8
6.5							PT			**Peat** (PT) slow hard drilling, well compacted frozen, Dark reddish brown	6.5
6.8							SP			**SAND** (SP) Light gray	6.8
7	SPT	027	11 12 18								
8.2							PT			**Peat** (PT) Brown	8.2
8.3							SP			**SAND** (SP) very fine grained and fine grained sand, Light gray	8.3
9	SPT	028	11 13 16								
10	SPT	029	11 12			23					
12	SPT	030	11 12 14			26					
14	SPT	031	11 12 13			25					
16.5							SM			**SILTY SAND** (SM) very fine sand, silt est. 15-30%, Light gray, moist to wet	16.5
17	SPT	032	20 39 43								
19	SPT	033	28 29 38			67					
20											20

☐ CME Auto Hammer ☒ Cathead Rope Method ☒ 140 lb. hammer with 30 in. drop ☐ 340 lb. hammer with 30 in. drop

A USCS LOG OF TEST HOLE CEHH2004.GPJ 2004TEMPLATE.GDT 1/10/05

LOG OF TEST HOLE

HOLE # TH-04-05 / TS-1

STATE OF ALASKA DOT&PF
Central Region Materials
Geology Section

PROJECT NUMBER: *53927*
PROJECT: *Chief Eddie Hoffman Hwy and Separated Pathway*

Station / Location: *52+6*
Offset: *HWY CL*
Elevation:

Equipment Type: *Mobile B-50*
Drilling Method: *Hollow-Stem Auger*
Field Crew: *G. Hamrick / J. Love*

Total Depth: *26.0 feet*
Date: *6/7/2004 - 6/8/2004*
Geologist: *C. Roso*

Weather: 70°

Ground Water Data		
Depth in (ft.)		
Time		
Date		
Symbol		

Depth (Feet)	Sample Type	Number	Blow Count	Sample	Recovery	N-Value	USCS Classification	Frozen Zone	Soil Graphic	SUBSURFACE MATERIAL
20	SPT	034	25 50/5.5"	X			SP			**SAND with Silt** (SP) visible ice crystals, Light gray 20.0
21										
22										
23										
24										
25	SPT	035	23 70	X						
26									BOH 26	26.0

Notes:
Installed 23' of thermistor casing to 23.4', 1" dia threaded pipe. installed thermistor string TS-1

☐ CME Auto Hammer ☒ Cathead Rope Method ☒ 140 lb. hammer with 30 in. drop ☐ 340 lb. hammer with 30 in. drop

A USCS LOG OF TEST HOLE CEHH2004.GPJ 2004TEMPLATE.GDT 1/10/05

LOG OF TEST HOLE

HOLE # TH-04-06

STATE OF ALASKA DOT&PF
Central Region Materials
Geology Section

PROJECT NUMBER: *53927*
PROJECT: *Chief Eddie Hoffman Hwy and Separated Pathway*

Station / Location: *83+58*
Offset: *8' R HWY CL*
Elevation:

Equipment Type: *Mobile B-50*
Drilling Method: *Hollow-Stem Auger*
Field Crew: *G. Hamrick / J. Love*

Total Depth: *11.5 feet*
Date: *6/8/2004 - 6/8/2004*
Geologist: *C. Roso*

Weather: 70°

Ground Water Data		
Depth in (ft.)		
Time		
Date		
Symbol		

Depth (Feet)	Sample Type	Number	Blow Count	Sample	Recovery	N-Value	USCS Classification	Frozen Zone	Soil Graphic	SUBSURFACE MATERIAL	
0	GRAB	036					SP			**Asphalt Concrete** 2" thick, poor condition, alligator cracking	0.0
										SAND with Gravel (SP) fine to medium sand, fine to medium gravel, Dark gray, dry to moist, medium dense	0.2
1							SP			036 Si=7%, Sa=51%, Gr=42%, Moisture=2.8%	1.0
										SAND (SP) fine grained, Light gray, dry to moist, medium dense	
2	SPT	037	8 11 4				SP			**Black Woven Fabric**	2.3 2.3
										SAND (SP) fine grained, Light gray, dry to moist, medium dense	
3										**Insulation** 2" thick, Pink	3.5 3.7
4	SPT	038	20 27 15			42	SP			**SAND** (SP) fine grained, Light gray, dry to moist, medium dense	
5											
6	SPT	039	5 4 5				Pt			**Peat** (Pt) fibrous, Reddish brown, moist, loose	6.8
7											
8	SPT	040	3 3 4			7				- ice rich est. 20%	9.0
9											
10	SPT	041	8 14 17			31					
11									BOH 11.5	Notes:	11.5

☐ CME Auto Hammer ☒ Cathead Rope Method ☒ 140 lb. hammer with 30 in. drop ☐ 340 lb. hammer with 30 in. drop

Sheet Number 1 of 1

LOG OF TEST HOLE

HOLE # TH-04-07

STATE OF ALASKA DOT&PF
Central Region Materials
Geology Section

PROJECT NUMBER: *53927*
PROJECT: *Chief Eddie Hoffman Hwy and Separated Pathway*

Station / Location: *90+26*
Offset: *5' R HWY CL*
Elevation:

Equipment Type: *Mobile B-50*
Drilling Method: *Hollow-Stem Auger*
Field Crew: *G. Hamrick / J. Love*

Total Depth: *11.5 feet*
Date: *6/8/2004 - 6/8/2004*
Geologist: *C. Roso*

Weather: 70°

Ground Water Data		
Depth in (ft.)		
Time		
Date		
Symbol		

Depth (Feet)	Sample Type	Number	Blow Count	Sample	Recovery	N-Value	USCS Classification	Frozen Zone	Soil Graphic	SUBSURFACE MATERIAL	
0											0
	GRAB	042					SP			**Asphalt Concrete** 3" thick	0.0
										SAND with Gravel (SP) Dark brown, dry to moist, loose	0.3
1										042 Si=7%, Sa=53%, Gr=40%, Moisture=2.7%	1.0
							SP			**SAND** (SP) Light gray, dry to moist	1
2											2
	SPT	043	11 9 5	X							2.6
							SP			**Black Woven Fabric**	2.7
3										**SAND** (SP) Light gray, dry to moist	3
											3.4
							SP			**Insulation** 2" thick, Pink	3.5
4										**SAND** (SP) very fine grained, Light gray, moist	4
	SPT	044	41 43 28	X		71					
5											5
6							Pt			**Peat** (Pt) fibrous, with interbeds of organic silt and very fine sand, Light gray, wet, loose	6.0 6
	SPT	045	3 4 5	X		9					
7											7
8											8
	SPT	046	2 3 4	X			SM			**SILTY SAND** (SM) very fine grained, Light gray, wet, loose	8.5
9											9
10											10
	SPT	047	19 30 43	X		73					
11									BOH 11.5	Notes:	11.5 11

☐ CME Auto Hammer ☒ Cathead Rope Method ☒ 140 lb. hammer with 30 in. drop ☐ 340 lb. hammer with 30 in. drop

Sheet Number 1 of 1

LOG OF TEST HOLE

HOLE # TH-04-08

STATE OF ALASKA DOT&PF
Central Region Materials
Geology Section

PROJECT NUMBER: *53927*
PROJECT: *Chief Eddie Hoffman Hwy and Separated Pathway*

Station / Location: *111+39*
Offset: *39' R HWY CL*
Elevation:

Equipment Type: *Mobile B-50*
Drilling Method: *Hollow-Stem Auger*
Field Crew: *G. Hamrick / J. Love*

Total Depth: *13.5 feet*
Date: *6/8/2004 - 6/8/2004*
Geologist: *C. Roso*

Weather: 70°

Ground Water Data		
Depth in (ft.)		
Time		
Date		
Symbol		

Depth (Feet)	Sample Type	Number	Blow Count	Sample	Recovery	N-Value	USCS Classification	Frozen Zone	Soil Graphic	SUBSURFACE MATERIAL	
0	GRAB	048					SW			**Asphalt Concrete** 2.5" thick	0.0
										SAND with Gravel (SW) Dark gray, dry, medium dense 048 Si=8%, Sa=52%, Gr=40%, Moisture=2.7%	0.2
1							SP			**SAND** (SP) very fine grained, Light gray, moist, medium dense	1.0
2	SPT	049	10 10 5	X							
3										**Insulation** 2" thick, Pink	3.3
							SP			**SAND** (SP) very fine grained, Light gray Reddish brown, moist, medium dense	3.5
4	SPT	050	8 14 13	X		27					
6	SPT	051	5 4 3	X							
7							OL			**Peat** (OL) fibrous, Reddish brown, moist to wet, soft	7.0
							SP			**SAND** (SP) Reddish brown, moist	7.8
8	SPT	052	4 3 4	X			OL			**SILTY Peat** (OL) interbeds of ice and sand, Dark reddish brown	8.5
9							OL			**SILT and PEAT interbeds** (OL) 2"-3" thick beds of silt, sand and peat, frozen peat, wet silt and sand, Dark reddish brown Dark gray, wet	9.5
10	SPT	053	3 4 5	X		9					
12	SPT	054	3 7 10	X		17					
13									BOH 13.5	Notes:	13.5

☐ CME Auto Hammer ☒ Cathead Rope Method ☒ 140 lb. hammer with 30 in. drop ☐ 340 lb. hammer with 30 in. drop

Sheet Number 1 of 1

A USCS LOG OF TEST HOLE CEHH2004.GPJ 2004TEMPLATE.GDT 1/10/05

LOG OF TEST HOLE

HOLE # TH-04-09

STATE OF ALASKA DOT&PF
Central Region Materials
Geology Section

PROJECT NUMBER: *53927*
PROJECT: *Chief Eddie Hoffman Hwy and Separated Pathway*

Station / Location: *129+9*
Offset: *10' R HWY CL*
Elevation:

Equipment Type: *Mobile B-50*
Drilling Method: *Hollow-Stem Auger*
Field Crew: *G. Hamrick / J. Love*

Total Depth: *13.5 feet*
Date: *6/8/2004 - 6/8/2004*
Geologist: *C. Roso*

Weather: 70°

Ground Water Data		
Depth in (ft.)		
Time		
Date		
Symbol		

Depth (Feet)	Sample Type	Number	Blow Count	Sample	Recovery	N-Value	USCS Classification	Frozen Zone	Soil Graphic	SUBSURFACE MATERIAL	
0										**Asphalt Concrete** 7" thick, 2 lifts	0.0
	GRAB	055					SW			**SAND with Gravel** (SW) Dark gray, dry, medium dense	0.6
1							SP			055 Si=8%, Sa=57%, Gr=35%, Moisture=4.2%	0.8
										SAND (SP) very fine grained, Light brown Light gray, moist, medium dense	
2			14								
3	SPT	NR	16			30					
			14								
4											
			8								
5	SPT	057	20				SP-SM			**SAND with Silt** (SP-SM) very fine grained, Light gray, moist	4.5
			23								5.5
6							SP			**SAND** (SP) Light gray, moist to wet, medium dense	
			16								
7	SPT	NR	17			37					
			20								
8											
			9								
9	SPT	059	9			18					
			9								9.5
10							OL			**PEAT and SILT interbeds** (OL) frozen with visible ice crystals, micaceous light gray silt, loose organics, Reddish brown Dark brown, moist to wet	
			4								
11	SPT	060	5			10					
			5								
12											12.0
			4				OL			**ORGANIC SILT** (OL) frozen with occasional large organic fragments, Dark brown	
13	SPT	061	5			11					
			6								13.5
									BOH 13.5	Notes:	

☐ CME Auto Hammer ☒ Cathead Rope Method ☒ 140 lb. hammer with 30 in. drop ☐ 340 lb. hammer with 30 in. drop

Sheet Number 1 of 1

A USCS LOG OF TEST HOLE CEHH2004.GPJ 2004TEMPLATE.GDT 1/10/05

LOG OF TEST HOLE

HOLE # TH-04-10

STATE OF ALASKA DOT&PF
Central Region Materials
Geology Section

PROJECT NUMBER: *53927*
PROJECT: *Chief Eddie Hoffman Hwy and Separated Pathway*

Station / Location: *153+14*
Offset: *6' R HWY CL*
Elevation:

Equipment Type: *Mobile B-50*
Drilling Method: *Hollow-Stem Auger*
Field Crew: *G. Hamrick / J. Love*

Total Depth: *9.5 feet*
Date: *6/8/2004 - 6/8/2004*
Geologist: *C. Roso*

Weather: 70°

Ground Water Data		
Depth in (ft.)		
Time		
Date		
Symbol		

Depth (Feet)	Sample Type	Number	Blow Count	Sample	Recovery	N-Value	USCS Classification	Frozen Zone	Soil Graphic	SUBSURFACE MATERIAL	
0	GRAB	062					SW			**Asphalt Concrete** 1" thick	0.0
										SAND with Gravel (SW) Dark gray, dry, medium dense 062 Si=6%, Sa=56%, Gr=38%, Moisture=3.3%	0.1
1											
2			15								2.5
3	SPT	063	17 15				SP			**SAND** (SP) very fine grained, Light gray, moist, dense	3.5
4							SP			**Insulation** 2" thick, Pink **SAND** (SP) very fine grained, Light gray, moist	3.6
			8								
5	SPT	NR	9 20			29					
6							PT			**Peat** (PT) frozen with visible ice layers, Dark brown Red, moist to wet	6.0
			15								
7	SPT	065	25 37			62					
8			16								
9	SPT	066	25 28			53			BOH 9.5	Notes:	9.5

☐ CME Auto Hammer ☒ Cathead Rope Method ☒ 140 lb. hammer with 30 in. drop ☐ 340 lb. hammer with 30 in. drop

Sheet Number 1 of 1

A USCS LOG OF TEST HOLE CEHH2004.GPJ 2004TEMPLATE.GDT 1/10/05

LOG OF TEST HOLE

HOLE # TH-04-11

STATE OF ALASKA DOT&PF
Central Region Materials
Geology Section

PROJECT NUMBER: *53927*
PROJECT: *Chief Eddie Hoffman Hwy and Separated Pathway*

Station / Location: *158+68*
Offset: *13' R HWY CL*
Elevation:

Equipment Type: *Mobile B-50*
Drilling Method: *Hollow-Stem Auger*
Field Crew: *G. Hamrick / J. Love*

Total Depth: *11.5 feet*
Date: *6/9/2004 - 6/9/2004*
Geologist: *C. Roso*

Weather: 70°

Ground Water Data		
Depth in (ft.)		
Time		
Date		
Symbol		

Depth (Feet)	Sample Type	Number	Blow Count	Sample	Recovery	N-Value	USCS Classification	Frozen Zone	Soil Graphic	SUBSURFACE MATERIAL	
0											0
			7				SW			**SAND with Gravel** (SW) fine gravel, 4" thick, Dark gray	0.0
	SPT	NR	7				SP			**SAND** (SP) very fine grained, Light gray, moist, medium dense	0.3
1			10								1
2											2
			10								2.3
	SPT	067	10				SW			**SAND with Gravel** (SW) Light gray	
3			9								3.1 3
							SP			**Asphalt Concrete** Black	3.2
										SAND (SP) frozen with visible ice layers, Light gray, moist to wet	
4											4
			7								
	SPT	068	6			13					
5			7								5
											5.5
							SP-SM			**SAND with Silt** (SP-SM) silty sand interbeds 1/4" to 1/8" thick	
6											6
			10								
	SPT	NR	15								
7			12								7.3
							PT			**Peat** (PT) fibrous, woody, no visible ice, Reddish brown	
											8.0 8
8			3				SP			**SAND** (SP)	8.3
							PT			**Peat** (PT) Reddish brown	
	SPT	NR	4								
9			5								9
10											10
			3								10.5
	SPT	069	5				SP			**SAND** (SP) slightly frozen grades moist to wet sand, Dark gray	
11			7								11
											11.5
									BOH 11.5	Notes:	

☐ CME Auto Hammer ☒ Cathead Rope Method ☒ 140 lb. hammer with 30 in. drop ☐ 340 lb. hammer with 30 in. drop

A USCS LOG OF TEST HOLE CEHH2004.GPJ 2004TEMPLATE.GDT 1/10/05

LOG OF TEST HOLE

HOLE # TH-04-12 / TS-2

STATE OF ALASKA DOT&PF
Central Region Materials
Geology Section

PROJECT NUMBER: *53927*
PROJECT: *Chief Eddie Hoffman Hwy and Separated Pathway*

Station / Location: *162+7*
Offset: *9' R HWY CL*
Elevation:

Equipment Type: *Mobile B-50*
Drilling Method: *Hollow-Stem Auger*
Field Crew: *G. Hamrick / J. Love*

Total Depth: *21.5 feet*
Date: *6/9/2004 - 6/9/2004*
Geologist: *C. Roso*

Weather: 70°

Ground Water Data		
Depth in (ft.)		
Time		
Date		
Symbol		

Depth (Feet)	Sample Type	Number	Blow Count	Sample	Recovery	N-Value	USCS Classification	Frozen Zone	Soil Graphic	SUBSURFACE MATERIAL
0	SPT	NR	3 7 9	X			SW			**SAND with Gravel** (SW) (road shoulder), Light gray, dry (0.0)
1							SP			**SAND** (SP) Light gray, dry to moist (1.0)
2	SPT	NR	2 6 12	X						
3										**Insulation** Pink (3.0–3.2)
							SP			**SAND** (SP) fine grained, Light gray, dry to moist
4	SPT	NR	6 14 20	X		34				
6	SPT	NR	9 13 8	X		21				
8	SPT	NR	3 2 2	X		4				
10	SPT	070	3 2 1	X		3				grades to wet, dark gray, dilatant reaction, nonplastic fines, wet (10.5)
12	SPT	NR	2 0 2	X		2				
							PT			**Peat** (PT) fibrous, Reddish brown, moist, soft (13.5)
14	SPT	071	4 5 8	X		13				
16	SPT	072	5 6 11	X		17	OL			**ORGANIC SILT** (OL) occasional fine sand interbeds, Reddish black, moist to wet, medium stiff (16.0)
18	SPT	073	4 5 4	X			SP			**SAND** (SP) heave in auger, no silt, dilatant reaction, Black, wet, loose (18.5)
20										

☐ CME Auto Hammer ☒ Cathead Rope Method ☒ 140 lb. hammer with 30 in. drop ☐ 340 lb. hammer with 30 in. drop

A USCS LOG OF TEST HOLE CEHH2004.GPJ 2004TEMPLATE.GDT 1/10/05

LOG OF TEST HOLE

HOLE # TH-04-12 / TS-2

STATE OF ALASKA DOT&PF
Central Region Materials
Geology Section

PROJECT NUMBER: *53927*
PROJECT: *Chief Eddie Hoffman Hwy and Separated Pathway*

Station / Location: *162+7*
Offset: *9' R HWY CL*
Elevation:

Equipment Type: *Mobile B-50*
Drilling Method: *Hollow-Stem Auger*
Field Crew: *G. Hamrick / J. Love*

Total Depth: *21.5 feet*
Date: *6/9/2004 - 6/9/2004*
Geologist: *C. Roso*

Weather: 70°

Ground Water Data		
Depth in (ft.)		
Time		
Date		
Symbol		

Depth (Feet)	Sample Type	Number	Blow Count	Sample	Recovery	N-Value	USCS Classification Frozen Zone	Soil Graphic	SUBSURFACE MATERIAL
20									**SAND** (SP) heave in auger, no silt, dilatant reaction, Black, wet, loose (cont.)
21	SPT	074	3 6 10	X	■	16			
								BOH 21.5	Notes: Installed 21.5' of thermistor casing, 1" dia threaded pipe. installed thermistor string TS-2

21.5

☐ CME Auto Hammer ☒ Cathead Rope Method ☒ 140 lb. hammer with 30 in. drop ☐ 340 lb. hammer with 30 in. drop

A USCS LOG OF TEST HOLE CEHH2004.GPJ 2004TEMPLATE.GDT 1/10/05

LOG OF TEST HOLE

HOLE # TH-04-13

STATE OF ALASKA DOT&PF
Central Region Materials
Geology Section

PROJECT NUMBER: *53927*
PROJECT: *Chief Eddie Hoffman Hwy and Separated Pathway*

Station / Location: *181+38*
Offset: *20' R HWY CL*
Elevation:

Equipment Type: *Mobile B-50*
Drilling Method: *Hollow-Stem Auger*
Field Crew: *G. Hamrick / J. Love*

Total Depth: *11.5 feet*
Date: *6/9/2004 - 6/9/2004*
Geologist: *C. Roso*

Weather: 70°

Ground Water Data		
Depth in (ft.)		
Time		
Date		
Symbol		

Depth (Feet)	Sample Type	Number	Blow Count	Sample	Recovery	N-Value	USCS Classification	Frozen Zone	Soil Graphic	SUBSURFACE MATERIAL	
0	GRAB	075					GW			**Asphalt Concrete** 2" thick	0.0
										GRAVEL with Sand (GW) Dark brown, moist, medium dense 075 Si=9%, Sa=49%, Gr=42%, Moisture=3.5%	0.2
1							SP			**SAND with Gravel** (SP) Dark brown, moist, medium dense	1.3
2	SPT	NR	13 10 9	X			SP			**SAND** (SP) (FILL), Dark gray, moist	2.3
3											
4	SPT	076	21 34 38	X		72					
5											
6	SPT	NR	21 12 4	X		16					
7											
8	SPT	077	3 3 3	X			PT			**Peat** (PT) Reddish brown, wet	8.5
9											
10	SPT	078	9 7 6	X		13	OL/ICE			**Interbedded Organic Silt and Ice** (OL/ICE) Dark brown, wet, Ice 2-3" thick white and clear crystalline	10.0
11									BOH 11.5	Notes:	11.5

☐ CME Auto Hammer ☒ Cathead Rope Method ☒ 140 lb. hammer with 30 in. drop ☐ 340 lb. hammer with 30 in. drop

A USCS LOG OF TEST HOLE CEHH2004.GPJ 2004TEMPLATE.GDT 1/10/05

LOG OF TEST HOLE

HOLE # TH-04-14

STATE OF ALASKA DOT&PF
Central Region Materials
Geology Section

PROJECT NUMBER: *53927*
PROJECT: *Chief Eddie Hoffman Hwy and Separated Pathway*

Station / Location: *11+54*
Offset: *5' R PATH CL*
Elevation:

Equipment Type: *Mobile B-50*
Drilling Method: *Hollow-Stem Auger*
Field Crew: *G. Hamrick / J. Love*

Total Depth: *9.5 feet*
Date: *6/10/2004 - 6/10/2004*
Geologist: *C. Roso*

Weather: Windy 70°

Ground Water Data		
Depth in (ft.)		
Time		
Date		
Symbol		

Depth (Feet)	Sample Type	Number	Blow Count	Sample	Recovery	N-Value	USCS Classification	Frozen Zone	Soil Graphic	SUBSURFACE MATERIAL	
0	GRAB	078					SP / GP			**Asphalt Concrete** 0.75" thick	0.0
							SP			**SAND with Gravel / GRAVEL with Sand** (SP / GP) 3/4" dia gravel, Dark brown, moist, medium dense	0.1
1										078 Si=8%, Sa=46%, Gr=46%, Moisture=3.7%	0.5
										SAND (SP) very fine grained sand, Dark gray, moist, medium dense	
2											
3	SPT	079	13 19 21	X		40					
4											
5	SPT	NR	9 10 12	X		22					
6							PT			**Peat** (PT) fibrous, frozen, no visible ice, very slow advance, Dark brown, moist	5.8
7	SPT	080	10 15 25	X		40					
8							PT / Ic			**Peat with Ice** (PT / Ice) very dense peat,, Dark brown, moist, Ice lenses to 1/4" crystalline in layers and nodules	8.0
9	SPT	081	10 11 13	X		24					
									BOH 9.5	Notes:	9.5

☐ CME Auto Hammer ☒ Cathead Rope Method ☒ 140 lb. hammer with 30 in. drop ☐ 340 lb. hammer with 30 in. drop

Sheet Number 1 of 1

A USCS LOG OF TEST HOLE CEHH2004.GPJ 2004TEMPLATE.GDT 1/10/05

LOG OF TEST HOLE

HOLE # TH-04-15

STATE OF ALASKA DOT&PF
Central Region Materials
Geology Section

PROJECT NUMBER: *53927*
PROJECT: *Chief Eddie Hoffman Hwy and Separated Pathway*

Station / Location: *201+57*
Offset: *7' R HWY CL*
Elevation:

Equipment Type: *Mobile B-50*
Drilling Method: *Hollow-Stem Auger*
Field Crew: *G. Hamrick / J. Love*

Total Depth: *11.5 feet*
Date: *6/10/2004 - 6/10/2004*
Geologist: *C. Roso*

Weather: Windy 70°

Ground Water Data		
Depth in (ft.)		
Time		
Date		
Symbol		

Depth (Feet)	Sample Type	Number	Blow Count	Sample	Recovery	N-Value	USCS Classification	Frozen Zone	Soil Graphic	SUBSURFACE MATERIAL	
0	GRAB	082					SP			**Asphalt Concrete** 3" thick	0.0
										SAND with Gravel (SP) Dark gray, dry to moist	0.3
										082 Si=8%, Sa=56%, Gr=36%, Moisture=3.1%	1.0
1							SP			**SAND** (SP) Light gray, moist	
2										**Fabric, Woven, White**	2.0
	SPT	083	6 5 7								
3											3.3
										Insulation Pink	3.5
							SP			**SAND** (SP) very fine grained, Light gray, moist	
4	SPT	NR	15 17 46			63					
5											
6	SPT	NR	25 28 20			48					
7											
8	SPT	084	5 6 5			11					
9										- grades wet, loose	9.0
10	SPT	085	3 3 6								
11							PT			**Peat** (PT) Black, moist	10.8
									BOH 11.5	Notes:	11.5

☐ CME Auto Hammer ☒ Cathead Rope Method ☒ 140 lb. hammer with 30 in. drop ☐ 340 lb. hammer with 30 in. drop

Sheet Number 1 of 1

A USCS LOG OF TEST HOLE CEHH2004.GPJ 2004TEMPLATE.GDT 1/10/05

LOG OF TEST HOLE

HOLE # TH-04-16

STATE OF ALASKA DOT&PF
Central Region Materials
Geology Section

PROJECT NUMBER: *53927*
PROJECT: *Chief Eddie Hoffman Hwy and Separated Pathway*

Station / Location: *212+57*
Offset: *6' R HWY CL*
Elevation:

Equipment Type: *Mobile B-50*
Drilling Method: *Hollow-Stem Auger*
Field Crew: *G. Hamrick / J. Love*

Total Depth: *15.5 feet*
Date: *6/10/2004 - 6/10/2004*
Geologist: *C. Roso*

Weather: Windy 70°

Ground Water Data		
Depth in (ft.)		
Time		
Date		
Symbol		

Depth (Feet)	Sample Type	Number	Blow Count	Sample	Recovery	N-Value	USCS Classification	Frozen Zone	Soil Graphic	SUBSURFACE MATERIAL
0										**Asphalt Concrete** 5.5" thick, 2 lifts (0.0–0.5)
1	GRAB	086					SW SP			**SAND with Gravel** (SW) 2" thick base course, Dark gray, dry to moist (0.5–0.8); 086 Si=6%, Sa=61%, Gr=31%, Moisture=3.9%; **SAND** (SP) very fine grained, Dark gray, moist, medium dense
2–3	SPT	NR	5 8 10	X		18				
4–5	SPT	087	10 21 22	X			GW SP			**Insulation** Pink (4.5–4.7); **GRAVEL with Sand** (GW) rounded gravel to 3/4", Dark gray, moist (4.7–5.0); **SAND** (SP) very fine grained, Dark gray, moist, medium dense
6–7	SPT	NR	9 9 7	X		16				
8–9	SPT	088	5 2 2	X			OL			**Peat / SILT interbeds** (OL) woody peat, interbeds 2-4" thick of silt, very fine sand and peat, Dark gray and Black, moist to wet, soft to medium stiff (9.0–13.5)
10–11	SPT	089	4 3 4	X		7				
12–13	SPT	090	3 3 4	X		7				
14–15	SPT	091	3 4 6	X		10	SP-SM			**SAND with Silt** (SP-SM) dilatant reaction, Black, wet, loose (13.5–15.5)
									BOH 15.5	Notes:

☐ CME Auto Hammer ☒ Cathead Rope Method ☒ 140 lb. hammer with 30 in. drop ☐ 340 lb. hammer with 30 in. drop

A USCS LOG OF TEST HOLE CEHH2004.GPJ 2004TEMPLATE.GDT 1/10/05

LOG OF TEST HOLE

HOLE # TH-04-17

STATE OF ALASKA DOT&PF
Central Region Materials
Geology Section

PROJECT NUMBER: *53927*
PROJECT: *Chief Eddie Hoffman Hwy and Separated Pathway*

Station / Location: *219+89*
Offset: *30' L HWY CL*
Elevation:

Equipment Type: *Mobile B-50*
Drilling Method: *Hollow-Stem Auger*
Field Crew: *G. Hamrick / J. Love*

Total Depth: *11.5 feet*
Date: *6/10/2004 - 6/10/2004*
Geologist: *C. Roso*

Weather: Windy 70°

Ground Water Data		
Depth in (ft.)		
Time		
Date		
Symbol		

Depth (Feet)	Sample Type	Number	Blow Count	Sample	Recovery	N-Value	USCS Classification	Frozen Zone	Soil Graphic	SUBSURFACE MATERIAL	
0	GRAB	092					SW			**Asphalt Concrete** 2" thick	0.0
										SAND with Gravel (SW) Dark gray 092 Si=7%, Sa=58%, Gr=35%, Moisture=3.6%	0.2
1							SP			**SAND** (SP) Light gray	1.0
2	SPT	NR	10 13 6							**Fabric** Black	2.3
3											3.7
4										**Insulation** Pink	3.9
	SPT	NR	27 41 38			79	SP			**SAND** (SP) Light gray	
5											
6											6.5
	SPT	093	3 4 8				Pt			**Peat** (Pt) fibrous, Red Brown, moist, loose	7.0
7							ML			**SILT with Organics** (ML) Dark reddish gray, wet	
8											8.0
	SPT	NR	3 5 6			11	Pt			**Peat** (Pt) cool, Reddish brown, moist, loose	
9											
10											10.0
	SPT	094	5 6 13			19	OL			**INTERBEDDED SILT and PEAT** (OL) Dark gray, moist	
11											11.5
									BOH 11.5	Notes:	

☐ CME Auto Hammer ☒ Cathead Rope Method ☒ 140 lb. hammer with 30 in. drop ☐ 340 lb. hammer with 30 in. drop

Sheet Number 1 of 1

A USCS LOG OF TEST HOLE CEHH2004.GPJ 2004TEMPLATE.GDT 1/10/05

LOG OF TEST HOLE

HOLE # TH-04-18

STATE OF ALASKA DOT&PF
Central Region Materials
Geology Section

PROJECT NUMBER: *53927*
PROJECT: *Chief Eddie Hoffman Hwy and Separated Pathway*

Station / Location: *229+61*
Offset: *9' R HWY CL*
Elevation:

Equipment Type: *Mobile B-50*
Drilling Method: *Hollow-Stem Auger*
Field Crew: *G. Hamrick / J. Love*

Total Depth: *11.0 feet*
Date: *6/10/2004 - 6/10/2004*
Geologist: *C. Roso*

Weather: Windy 70°

Ground Water Data		
Depth in (ft.)		
Time		
Date		
Symbol		

Depth (Feet)	Sample Type	Number	Blow Count	Sample	Recovery	N-Value	USCS Classification	Frozen Zone	Soil Graphic	SUBSURFACE MATERIAL	
0										**Asphalt Concrete** 6" thick, 3 lifts	0.0
	GRAB	095					SW			**SAND with Gravel** (SW) well rounded, Dark gray, moist, medium dense	0.5
1										~~095 Si=8%, Sa=50%, Gr=42%, Moisture=4.2%~~	1.0
							SP			**SAND** (SP) very fine grained, Dark gray, moist	
2											
	SPT	NR	7 7 7			14					
3											
											3.8
4							PT			**Peat** (PT) fibrous, Dark reddish brown, moist	
	SPT	096	4 11 14								4.8
5							ML/OL			**SILT with ORGANICS** (ML/OL) interbeds of organics and silt frozen with ice crystals., Dark gray	
6											
	SPT	097	9 14 5			19					
7											7.5
							PT			**Peat** (PT) Dark reddish brown	8.0
8							ML			**SILT** (ML) Dark gray	8.5
	SPT	098	3 8 9				OL			**ORGANICS with ICE** (OL) nodules of ice to 1/2" thick, clear and white ice estimate 30-40% ice in silty organics matrix, Black	
9											
	SPT	099	9 11 13			24					
10											
11									BOH 11	Notes:	11.0

☐ CME Auto Hammer ☒ Cathead Rope Method ☒ 140 lb. hammer with 30 in. drop ☐ 340 lb. hammer with 30 in. drop

A USCS LOG OF TEST HOLE CEHH2004.GPJ 2004TEMPLATE.GDT 1/10/05

LOG OF TEST HOLE

HOLE # TH-04-19

STATE OF ALASKA DOT&PF
Central Region Materials
Geology Section

PROJECT NUMBER: *53927*
PROJECT: *Chief Eddie Hoffman Hwy and Separated Pathway*

Station / Location: *232+20*
Offset: *7' L HWY CL*
Elevation:

Equipment Type: *Mobile B-50*
Drilling Method: *Hollow-Stem Auger*
Field Crew: *G. Hamrick / J. Love*

Total Depth: *31.5 feet*
Date: *6/10/2004 - 6/10/2004*
Geologist: *C. Roso*

Weather: Windy 70°

Ground Water Data		
Depth in (ft.)		
Time		
Date		
Symbol		

Depth (Feet)	Sample Type	Number	Blow Count	Sample	Recovery	N-Value	USCS Classification	Frozen Zone	Soil Graphic	SUBSURFACE MATERIAL	
0										**Asphalt Concrete** 2.5' thick, loose and unconsolidated asphalt cold patch to 2', asphalt pavement from 2.0-2.5'	0.0
2	SPT	100	25 17 16	X			SW			**SAND with Gravel** (SW) Light brown, dry to moist, medium dense	2.5
3							SP			**SAND** (SP) fine to very fine grained sand (FILL), Light gray, dry, medium dense	3.0
5	SPT	NR	12 12 12	X		24					
7	SPT	101	10 7 8	X		15					
8										- occasional coarse sand grain	8.0
9	SPT	NR	12 11 10	X		21					
11	SPT	102	10 9 7	X		16					
12											12.5
13	SPT	103	28 43 29	X		72				- frozen	
14										- wet / saturated, quick dilatant reaction, very loose	14.0
15	SPT	104	5 3 2	X		5					
16										- grades moist to wet	16.0
17	SPT	105	3 3 4	X			ML / OL			**SILT with ORGANICS** (ML / OL) occasional organic fragments, Dark brown Black, moist to wet, soft	17.0
19	SPT	106	2 2 7	X		9					
20											

☐ CME Auto Hammer ☒ Cathead Rope Method ☒ 140 lb. hammer with 30 in. drop ☐ 340 lb. hammer with 30 in. drop

A USCS LOG OF TEST HOLE CEHH2004.GPJ 2004TEMPLATE.GDT 1/10/05

LOG OF TEST HOLE

HOLE # TH-04-19

STATE OF ALASKA DOT&PF
Central Region Materials
Geology Section

PROJECT NUMBER: *53927*
PROJECT: *Chief Eddie Hoffman Hwy and Separated Pathway*

Station / Location: *232+20*
Offset: *7' L HWY CL*
Elevation:

Equipment Type: *Mobile B-50*
Drilling Method: *Hollow-Stem Auger*
Field Crew: *G. Hamrick / J. Love*

Total Depth: *31.5 feet*
Date: *6/10/2004 - 6/10/2004*
Geologist: *C. Roso*

Weather: Windy 70°

Ground Water Data		
Depth in (ft.)		
Time		
Date		
Symbol		

Depth (Feet)	Sample Type	Number	Blow Count	Sample	Recovery	N-Value	USCS Classification	Frozen Zone	Soil Graphic	SUBSURFACE MATERIAL
20	SPT	107	7 7 11	X		18	ML / OL			**SILT with ORGANICS and ICE** (ML / OL) sticky, low to medium plasticity, frozen, estimate grades from 10-20% ice to 30-40% ice with depth, Black, Ice 10-20% of volume grades to 30-40% (20.0)
22	SPT	108	11 11 11	X		22				
24	SPT	109	5 2 2	X						
25							ML / OL			**SILT with ORGANICS** (ML / OL) Black, wet, soft (24.8)
26	SPT	110	3 3 4	X						
27							ML			- fine sand interbed 1/4" thick (26.8); **SILT** (ML) fine sand 5-10%, non plastic,, Black, moist, medium stiff (26.8)
28	SPT	111	5 4 5	X		9				
30	SPT	112	3 2 6	X		8				
31									BOH 31.5	Notes: (31.5)

☐ CME Auto Hammer ☒ Cathead Rope Method ☒ 140 lb. hammer with 30 in. drop ☐ 340 lb. hammer with 30 in. drop

A USCS LOG OF TEST HOLE CEHH2004.GPJ 2004TEMPLATE.GDT 1/10/05

LOG OF TEST HOLE

HOLE # TH-04-20

STATE OF ALASKA DOT&PF
Central Region Materials
Geology Section

PROJECT NUMBER: *53927*
PROJECT: *Chief Eddie Hoffman Hwy and Separated Pathway*

Station / Location: *232+34*
Offset: *4' L HWY CL*
Elevation:

Equipment Type: *Mobile B-50*
Drilling Method: *Hollow-Stem Auger*
Field Crew: *G. Hamrick / R. Ruth*

Total Depth: *51.5 feet*
Date: *7/20/2004 - 7/20/2004*
Geologist: *C. Roso*

Ground Water Data		
Depth in (ft.)		
Time		
Date		
Symbol		

Weather: 65°

Depth (Feet)	Sample Data: Sample Type	Number	Blow Count	Sample	Recovery	N-Value	USCS Classification	Frozen Zone	Soil Graphic	SUBSURFACE MATERIAL	
0										**Asphalt Concrete** 2.5' thick, loose asphalt cold patch over asphalt concrete and loose asphalt cold patch	0.0
2.5										**FILL** No samples obtained due to proximity of TH-04-19 approximately 3' away.	
7.5										- grades harder possibly frozen	

☐ CME Auto Hammer ☒ Cathead Rope Method ☒ 140 lb. hammer with 30 in. drop ☐ 340 lb. hammer with 30 in. drop

A USCS LOG OF TEST HOLE CEHH2004.GPJ 2004TEMPLATE.GDT 1/10/05

LOG OF TEST HOLE

HOLE # TH-04-20

STATE OF ALASKA DOT&PF
Central Region Materials
Geology Section

PROJECT NUMBER: *53927*
PROJECT: *Chief Eddie Hoffman Hwy and Separated Pathway*

Station / Location: *232+34*
Offset: *4' L HWY CL*
Elevation:

Equipment Type: *Mobile B-50*
Drilling Method: *Hollow-Stem Auger*
Field Crew: *G. Hamrick / R. Ruth*

Total Depth: *51.5 feet*
Date: *7/20/2004 - 7/20/2004*
Geologist: *C. Roso*

Weather: 65°

Ground Water Data		
Depth in (ft.)		
Time		
Date		
Symbol		

Depth (Feet)	Sample Type	Number	Blow Count	Sample	Recovery	N-Value	USCS Classification	Frozen Zone	Soil Graphic	SUBSURFACE MATERIAL
20										**FILL** No samples obtained due to proximity of TH-04-19 approximately 3' away. (cont.)
21										- possible frozen at 20' from cuttings: light gray fine grained sand with silt
22										- possibly thawed and wet from drill action and cuttings
23										
24										
25										- frozen from drill action
26										
27										
28										
29	SPT	001	11 4 4	X	■		ML			**SILT with Organics** (ML) frozen, Dark gray, wet, medium stiff
30							SP-SM			**SILTY SAND / SAND with SILT** (SP-SM) very fine sand, dilatant, Black, wet, loose
31										
32										
33	SPT	002	6 6 8	X	■	14				
34										
35	SPT	003		X			SP-SM / SP			**SAND with Silt / SAND** (SP-SM / SP) very fine sand, heaving into auger., Black, wet, very loose 003 Heave- No recovery
36										
37										
38										
39										
40										

20.0 — 22.0 — 25.0 — 29.0 — 30.0 — 35.0

☐ CME Auto Hammer ☒ Cathead Rope Method ☒ 140 lb. hammer with 30 in. drop ☐ 340 lb. hammer with 30 in. drop

A USCS LOG OF TEST HOLE CEHH2004.GPJ 2004TEMPLATE.GDT 1/10/05

LOG OF TEST HOLE

HOLE # TH-04-20

STATE OF ALASKA DOT&PF
Central Region Materials
Geology Section

PROJECT NUMBER: *53927*
PROJECT: *Chief Eddie Hoffman Hwy and Separated Pathway*

Station / Location: *232+34*
Offset: *4' L HWY CL*
Elevation:

Equipment Type: *Mobile B-50*
Drilling Method: *Hollow-Stem Auger*
Field Crew: *G. Hamrick / R. Ruth*

Total Depth: *51.5 feet*
Date: *7/20/2004 - 7/20/2004*
Geologist: *C. Roso*

Weather: 65°

Ground Water Data		
Depth in (ft.)		
Time		
Date		
Symbol		

Depth (Feet)	Sample Type	Number	Blow Count	Sample	Recovery	N-Value	USCS Classification	Frozen Zone	Soil Graphic	SUBSURFACE MATERIAL
40										**SAND with Silt / SAND** (SP-SM / SP) very fine sand, heaving into auger., Black, wet, very loose (cont.)
41										
42										
43										
44										
45										
46										
47										
48										
49										
50	SPT	004	2	X		5	ML			**SILT with ORGANICS** (ML) very cold, not frozen, Black, wet, loose (50.0)
51			2							
			3						BOH 51.5	(51.5) Notes: 50' thermistor casing installed, broken during installation, unusable for thermistor installation.

☐ CME Auto Hammer ☒ Cathead Rope Method ☒ 140 lb. hammer with 30 in. drop ☐ 340 lb. hammer with 30 in. drop

A USCS LOG OF TEST HOLE CEHH2004.GPJ 2004TEMPLATE.GDT 1/10/05

LOG OF TEST HOLE

HOLE # TH-04-21

STATE OF ALASKA DOT&PF
Central Region Materials
Geology Section

PROJECT NUMBER: *53927*
PROJECT: *Chief Eddie Hoffman Hwy and Separated Pathway*

Station / Location: *233+62*
Offset: *11' R HWY CL*
Elevation:

Equipment Type: *Mobile B-50*
Drilling Method: *Hollow-Stem Auger*
Field Crew: *G. Hamrick / R. Ruth*

Total Depth: *11.5 feet*
Date: *7/21/2004 - 7/21/2004*
Geologist: *C. Roso*

Weather: 65°

Ground Water Data		
Depth in (ft.)		
Time		
Date		
Symbol		

Depth (Feet)	Sample Type	Number	Blow Count	Sample	Recovery	N-Value	USCS Classification	Frozen Zone	Soil Graphic	SUBSURFACE MATERIAL
0										**Asphalt Concrete** 2.5' thick, 10" asphalt cold patch over asphalt concrete 2" thick, over loose asphalt cold patch (0.0)
1							GP			**GRAVEL** (GP) angular gravel, Dark reddish brown, dry (1.0)
2							SP			**SAND** (SP) fine sand (FILL), Light gray, dry to moist, medium dense (1.5)
3	SPT	005	10 15 20	X		35				
4										
5	SPT	006	13 13 15	X		28				
6										
7										
8	SPT	007	10 14 12	X		26				
9										
10	SPT	008	6 10 9	X		19				
11									BOH 11.5	(11.5)

Notes:
rig broke down rear transmission seal broken, stopped drilling and abandoned hole.

☐ CME Auto Hammer ☒ Cathead Rope Method ☒ 140 lb. hammer with 30 in. drop ☐ 340 lb. hammer with 30 in. drop

A USCS LOG OF TEST HOLE CEHH2004.GPJ 2004TEMPLATE.GDT 1/10/05

APPENDIX C
Year 2004 Test Pit Logs

LOG OF TEST PIT

TESTPIT # TP-04-01

STATE OF ALASKA DOT&PF
Central Region Materials
Geology Section

PROJECT NUMBER: *53927*
PROJECT: *Chief Eddie Hoffman Hwy and Separated Pathway*

Station / Location: *151+58*
Offset: *46' L HWY CL*
Elevation:

Equipment Type: *Hitachi Garden Backhoe*
Hole Type: *Test Pit*
Field Crew: *Peter Hinz, Faulkner Walsh Const.*

Total Depth: *6.0 feet*
Date: *7/22/2001 - 7/22/2001*
Geologist: *C. Roso*

Ground Water Data		
Depth in (ft.)		
Time		
Date		
Symbol		

Weather: 65°

Depth (Feet)	Sample Type	Field Number	Sample	USCS Classification	Frozen Zone	Soil Graphic	SUBSURFACE MATERIAL	
0				SP			**SAND** (SP) (FILL), Light gray, dry to moist	0.0
1								
2								
3	GRAB	001		ML / OL			**SILT with Sand and ORGANICS** (ML / OL) Reddish brown, moist	3.0
				SP			**SAND** (SP) (NATIVE), Red Gray, moist	3.5
4								
5	GRAB	002						
6						BOH 6	Notes:	6.0

B USCS LOG OF TEST PIT CEHH2004.GPJ 2004TEMPLATE.GDT 1/10/05

LOG OF TEST PIT

TESTPIT # TP-04-02

STATE OF ALASKA DOT&PF
Central Region Materials
Geology Section

PROJECT NUMBER: *53927*
PROJECT: *Chief Eddie Hoffman Hwy and Separated Pathway*

Station / Location: *150+67*
Offset: *57' L HWY CL*
Elevation:

Equipment Type: *Hitachi Garden Backhoe*
Hole Type: *Test Pit*
Field Crew: *Peter Hinz, Faulkner Walsh Const.*

Total Depth: *5.0 feet*
Date: *7/22/2001 - 7/22/2001*
Geologist: *C. Roso*

Weather: 65°

Ground Water Data		
Depth in (ft.)		
Time		
Date		
Symbol		

Depth (Feet)	Sample Type	Field Number	Sample	USCS Classification	Frozen Zone	Soil Graphic	SUBSURFACE MATERIAL	
0				PT			**Vegetative Mat / Sod** (PT) fibrous, Reddish brown, moist	0.0
1				ML/MH			**SILT** (ML/MH) medium plasticity, Light gray, moist	1.0
2								
				ML			**SANDY SILT** (ML) frozen, Dark gray, wet, Vx	2.5
3	GRAB	003						
4	GRAB	004		SP			**SAND with Silt** (SP) semi frozen, Dark gray, moist to wet	4.3
5						BOH 5	Notes:	5.0

B USCS LOG OF TEST PIT CEHH2004.GPJ 2004TEMPLATE.GDT 1/10/05

LOG OF TEST PIT

TESTPIT # TP-04-03

STATE OF ALASKA DOT&PF
Central Region Materials
Geology Section

PROJECT NUMBER: *53927*
PROJECT: *Chief Eddie Hoffman Hwy and Separated Pathway*

Station / Location: *149+48*
Offset: *27' L HWY CL*
Elevation:

Equipment Type: *Hitachi Garden Backhoe*
Hole Type: *Test Pit*
Field Crew: *Peter Hinz, Faulkner Walsh Const.*

Total Depth: *7.0 feet*
Date: *7/22/2001 - 7/22/2001*
Geologist: *C. Roso*

Ground Water Data		
Depth in (ft.)		
Time		
Date		
Symbol		

Weather: 65°

Depth (Feet)	Sample Data: Sample Type	Field Number	Sample	USCS Classification Frozen Zone	Soil Graphic	SUBSURFACE MATERIAL	
0				SP		**SAND** (SP) (FILL), Light gray, dry	0.0
1							
2							2.2
				OL		**ORGANICS** (OL) Red, dry to moist	
3							3.5
				SM		**SILTY SAND** (SM) Reddish brown Gray, moist	
4							
5							5.5
				SP		**SAND** (SP) Red Gray, moist	
6							
7					BOH 7	Notes:	7.0

B USCS LOG OF TEST PIT CEHH2004.GPJ 2004TEMPLATE.GDT 1/10/05

LOG OF TEST PIT

TESTPIT # TP-04-04

STATE OF ALASKA DOT&PF
Central Region Materials
Geology Section

PROJECT NUMBER: *53927*
PROJECT: *Chief Eddie Hoffman Hwy and Separated Pathway*

Station / Location: *154+22*
Offset: *62' L HWY CL*
Elevation:

Equipment Type: *Hitachi Garden Backhoe*
Hole Type: *Test Pit*
Field Crew: *Peter Hinz, Faulkner Walsh Const.*

Total Depth: *6.0 feet*
Date: *7/22/2001 - 7/22/2001*
Geologist: *C. Roso*

Ground Water Data		
Depth in (ft.)		
Time		
Date		
Symbol		

Weather: 65°

Depth (Feet)	Sample Type	Field Number	Sample	USCS Classification	Frozen Zone	Soil Graphic	SUBSURFACE MATERIAL	
0				SP			**SAND** (SP) estimate 10% fine gravel (FILL), Light gray, moist	0.0
1								
2								
3								
4				SP			**SAND with Gravel** (SP) Dark gray, moist	4.0
				SP			**SAND** (SP) fine grained (FILL), Dark gray, moist	4.5
5	GRAB	005		PT			**Peat** (PT) fibrous, Reddish brown, moist to wet	5.0
6						BOH 6	Notes:	6.0

B USCS LOG OF TEST PIT CEHH2004.GPJ 2004TEMPLATE.GDT 1/10/05

LOG OF TEST PIT

TESTPIT # TP-04-05

STATE OF ALASKA DOT&PF
Central Region Materials
Geology Section

PROJECT NUMBER: *53927*
PROJECT: *Chief Eddie Hoffman Hwy and Separated Pathway*

Station / Location: *157+83*
Offset: *71' L HWY CL*
Elevation:

Equipment Type: *Hitachi Garden Backhoe*
Hole Type: *Test Pit*
Field Crew: *Peter Hinz, Faulkner Walsh Const.*

Total Depth: *3.3 feet*
Date: *7/22/2001 - 7/22/2001*
Geologist: *C. Roso*

Ground Water Data		
Depth in (ft.)		
Time		
Date		
Symbol		

Weather: 65°

Depth (Feet)	Sample Type	Field Number	Sample	USCS Classification Frozen Zone	Soil Graphic	SUBSURFACE MATERIAL	
0				PT		**Peat** (PT) Dark reddish brown, moist	0.0
1							
2	ST	006		ML/OL		**SILT with ORGANICS** (ML/OL) Reddish black	2.0
3				ML		**SILT with Sand** (ML) very fine sand, Dark gray, moist to wet	3.0
					BOH 3.25	Notes:	3.3

B USCS LOG OF TEST PIT CEHH2004.GPJ 2004TEMPLATE.GDT 1/10/05

LOG OF TEST PIT

TESTPIT # TP-04-06

STATE OF ALASKA DOT&PF
Central Region Materials
Geology Section

PROJECT NUMBER: *53927*
PROJECT: *Chief Eddie Hoffman Hwy and Separated Pathway*

Station / Location: *161+28*
Offset: *70' L HWY CL*
Elevation:

Equipment Type: *Hitachi Garden Backhoe*
Hole Type: *Test Pit*
Field Crew: *Peter Hinz, Faulkner Walsh Const.*

Total Depth: *5.0 feet*
Date: *7/22/2001 - 7/22/2001*
Geologist: *C. Roso*

Ground Water Data		
Depth in (ft.)		
Time		
Date		
Symbol		

Weather: 65°

Depth (Feet)	Sample Data: Sample Type	Field Number	Sample	USCS Classification	Frozen Zone	Soil Graphic	SUBSURFACE MATERIAL	
0				SP			**SAND** (SP) embankment fill (FILL), Light gray	0.0
1				PT			**Peat** (PT) fibrous, Reddish brown, moist	1.0
2								2.5
3				SP			**SAND** (SP) fine grained, Light gray, moist	
4				SM			**SAND/ SILT interbeds** (SM) silt is frozen, sand is not, Dark gray, moist	4.0
5						BOH 5	Notes:	5.0

B USCS LOG OF TEST PIT CEHH2004.GPJ 2004TEMPLATE.GDT 1/10/05

LOG OF TEST PIT

TESTPIT # TP-04-07

STATE OF ALASKA DOT&PF
Central Region Materials
Geology Section

PROJECT NUMBER: *53927*
PROJECT: *Chief Eddie Hoffman Hwy and Separated Pathway*

Station / Location: *172+27*
Offset: *35' L HWY CL*
Elevation:

Equipment Type: *Hitachi Garden Backhoe*
Hole Type: *Test Pit*
Field Crew: *Peter Hinz, Faulkner Walsh Const.*

Total Depth: *6.0 feet*
Date: *7/22/2001 - 7/22/2001*
Geologist: *C. Roso*

Weather: 65°

Ground Water Data		
Depth in (ft.)		
Time		
Date		
Symbol		

Depth (Feet)	Sample Type	Field Number	Sample	USCS Classification	Frozen Zone	Soil Graphic	SUBSURFACE MATERIAL	
0				SM			**SILTY SAND** (SM) hard cutting with backhoe, Black, moist to wet	0.0
1								
2								
3	GRAB	007		SP-SM			**SAND with Silt** (SP-SM) (FILL), Dark gray, moist to wet	3.0
4				PT			**Peat** (PT) Reddish brown, moist	4.0
5	GRAB	008						
6						BOH 6	Notes: Hole collapsing as digging progressed	6.0

B USCS LOG OF TEST PIT CEHH2004.GPJ 2004TEMPLATE.GDT 1/10/05

LOG OF TEST PIT

TESTPIT # TP-04-08

STATE OF ALASKA DOT&PF
Central Region Materials
Geology Section

PROJECT NUMBER: *53927*
PROJECT: *Chief Eddie Hoffman Hwy and Separated Pathway*

Station / Location: *68+75*
Offset: *29' L HWY CL*
Elevation:

Equipment Type: *Hitachi Garden Backhoe*
Hole Type: *Test Pit*
Field Crew: *Peter Hinz, Faulkner Walsh Const.*

Total Depth: *5.0 feet*
Date: *7/22/2001 - 7/22/2001*
Geologist: *C. Roso*

Weather: 65°

Ground Water Data		
Depth in (ft.)		
Time		
Date		
Symbol		

Depth (Feet)	Sample Type	Field Number	Sample	USCS Classification	Frozen Zone	Soil Graphic	SUBSURFACE MATERIAL	
0				SP			**SAND with Asphalt** (SP) with asphalt debris, Light gray, moist	0.0
1								
				SP			**SAND with Gravel** (SP) Light gray, moist	1.5
2				SP			**SAND** (SP) trace to some silt, Light gray, moist	2.0
3								
4	GRAB	009		SP			**SAND with Gravel** (SP) Light gray, moist	4.0
5						BOH 5	Notes:	5.0

B USCS LOG OF TEST PIT CEHH2004.GPJ 2004TEMPLATE.GDT 1/10/05

LOG OF TEST PIT

TESTPIT # TP-04-09

STATE OF ALASKA DOT&PF
Central Region Materials
Geology Section

PROJECT NUMBER: *53927*
PROJECT: *Chief Eddie Hoffman Hwy and Separated Pathway*

Station / Location: *83+82*
Offset: *27' L HWY CL*
Elevation:

Equipment Type: *Hitachi Garden Backhoe*
Hole Type: *Test Pit*
Field Crew: *Peter Hinz, Faulkner Walsh Const.*

Total Depth: *4.0 feet*
Date: *7/22/2001 - 7/22/2001*
Geologist: *C. Roso*

Ground Water Data		
Depth in (ft.)		
Time		
Date		
Symbol		

Weather: 65°

Depth (Feet)	Sample Data: Sample Type	Field Number	Sample	USCS Classification Frozen Zone	Soil Graphic	SUBSURFACE MATERIAL	
0				SP		**SAND with Gravel** (SP) Light gray, moist	0.0
				SP		**SAND** (SP) hole caving at 3', Dark olive brown, moist to wet	0.3
1							
2							
3							
4					BOH 4	Notes: Stopped due to caving	4.0

B USCS LOG OF TEST PIT CEHH2004.GPJ 2004TEMPLATE.GDT 1/10/05

LOG OF TEST PIT

TESTPIT # TP-04-10

STATE OF ALASKA DOT&PF
Central Region Materials
Geology Section

PROJECT NUMBER: *53927*
PROJECT: *Chief Eddie Hoffman Hwy and Separated Pathway*

Station / Location: *107+21*
Offset: *30' L HWY CL*
Elevation:

Equipment Type: *Hitachi Garden Backhoe*
Hole Type: *Test Pit*
Field Crew: *Peter Hinz, Faulkner Walsh Const.*

Total Depth: *5.5 feet*
Date: *7/22/2001 - 7/22/2001*
Geologist: *C. Roso*

Ground Water Data		
Depth in (ft.)		
Time		
Date		
Symbol		

Weather: 65°

Depth (Feet)	Sample Data: Sample Type	Field Number	Sample	USCS Classification	Frozen Zone	Soil Graphic	SUBSURFACE MATERIAL	
0				SP			**SAND with Gravel** (SP) asphalt chunks (debris), Light gray, dry to moist	0.0
								0.5
				SP			**SAND** (SP) Light gray, dry to moist	0.8
							Asphalt Concrete asphalt chunks (debris)	1.0
1				SP			**SAND with Gravel** (SP) Light gray, moist	
2								
							Geotextile Fabric Black	2.8 / 2.8
3								3.3
							Asphalt Concrete 2" thick, asphalt chunks (debris)	3.5
				SP			**SAND with Gravel** (SP) Light gray, moist	
4								
5								5.0
							Asphalt Concrete 2' thick, asphalt chunks (debris)	5.2
				SP			**SAND** (SP) Light gray, moist	5.5
						BOH 5.5	Notes:	

B USCS LOG OF TEST PIT CEHH2004.GPJ 2004TEMPLATE.GDT 5/23/05

LOG OF TEST PIT

TESTPIT # TP-04-11

STATE OF ALASKA DOT&PF
Central Region Materials
Geology Section

PROJECT NUMBER: *53927*
PROJECT: *Chief Eddie Hoffman Hwy and Separated Pathway*

Station / Location: *26+38*
Offset: *5' R PATH CL*
Elevation:

Equipment Type: *Hitachi Garden Backhoe*
Hole Type: *Test Pit*
Field Crew: *Peter Hinz, Faulkner Walsh Const.*

Total Depth: *5.0 feet*
Date: *7/22/2001 - 7/22/2001*
Geologist: *C. Roso*

Ground Water Data		
Depth in (ft.)		
Time		
Date		
Symbol		

Weather: 65°

Depth (Feet)	Sample Data: Sample Type	Field Number	Sample	USCS Classification	Frozen Zone	Soil Graphic	SUBSURFACE MATERIAL	
0				SP			**SAND** (SP) occasional fine gravel clast, Light gray, moist	0.0
1								
2							- interbeds of silt and fine sand	2.0
3							- harder digging	3.0
4							- frozen no visible ice	4.0
5						BOH 5	Notes:	5.0

B USCS LOG OF TEST PIT CEHH2004.GPJ 2004TEMPLATE.GDT 1/10/05

LOG OF TEST PIT

TESTPIT # TP-04-12

STATE OF ALASKA DOT&PF
Central Region Materials
Geology Section

PROJECT NUMBER: *53927*
PROJECT: *Chief Eddie Hoffman Hwy and Separated Pathway*

Station / Location: *31+36*
Offset: *6' R PATH CL*
Elevation:

Equipment Type: *Hitachi Garden Backhoe*
Hole Type: *Test Pit*
Field Crew: *Peter Hinz, Faulkner Walsh Const.*

Total Depth: *5.5 feet*
Date: *7/22/2001 - 7/22/2001*
Geologist: *C. Roso*

Ground Water Data		
Depth in (ft.)		
Time		
Date		
Symbol		

Weather: 65°

Depth (Feet)	Sample Data: Sample Type	Field Number	Sample	USCS Classification Frozen Zone	Soil Graphic	SUBSURFACE MATERIAL	
0				SP		**SAND** (SP) Light gray, dry to moist	0.0
1							
2							
3				SP-SM		**SAND with Silt** (SP-SM) Dark gray, moist to wet	3.0
4							
5							5.5
					BOH 5.5	Notes: Stopped due to caving	

B USCS LOG OF TEST PIT CEHH2004.GPJ 2004TEMPLATE.GDT 1/10/05

LOG OF TEST PIT

TESTPIT # TP-04-13

STATE OF ALASKA DOT&PF
Central Region Materials
Geology Section

PROJECT NUMBER: *53927*
PROJECT: *Chief Eddie Hoffman Hwy and Separated Pathway*

Station / Location: *32+89*
Offset: *4' R PATH CL*
Elevation:

Equipment Type: *Hitachi Garden Backhoe*
Hole Type: *Test Pit*
Field Crew: *Peter Hinz, Faulkner Walsh Const.*

Total Depth: *5.0 feet*
Date: *7/22/2001 - 7/22/2001*
Geologist: *C. Roso*

Ground Water Data		
Depth in (ft.)	2.3	
Time		
Date	7/22/01	
Symbol	▼	

Weather: 65°

Depth (Feet)	Sample Data: Sample Type	Field Number	Sample	USCS Classification	Frozen Zone	Soil Graphic	SUBSURFACE MATERIAL	
0				SM			**SILTY SAND** (SM) very fine sand, Dark gray, moist	0.0
1								
2								
▼				PT			**Peat** (PT) Brown, wet	2.3
3				SP-SM			**SILT with Sand** (SP-SM) interbeds of organics and silt, Dark gray, wet	3.2
4				SP			**SAND** (SP) wet quick dilatant reaction, Dark gray, wet	4.5
5						BOH 5	Notes: Stopped due to caving from 3.2-5'	5.0

B USCS LOG OF TEST PIT CEHH2004.GPJ 2004TEMPLATE.GDT 1/10/05

LOG OF TEST PIT

TESTPIT # TP-04-14

STATE OF ALASKA DOT&PF
Central Region Materials
Geology Section

PROJECT NUMBER: *53927*
PROJECT: *Chief Eddie Hoffman Hwy and Separated Pathway*

Station / Location: *33+38*
Offset: *3' R PATH CL*
Elevation:

Equipment Type: *Hitachi Garden Backhoe*
Hole Type: *Test Pit*
Field Crew: *Peter Hinz, Faulkner Walsh Const.*

Total Depth: *5.5 feet*
Date: *7/22/2001 - 7/22/2001*
Geologist: *C. Roso*

Ground Water Data		
Depth in (ft.)		
Time		
Date		
Symbol		

Weather: 65°

Depth (Feet)	Sample Type	Field Number	Sample	USCS Classification	Frozen Zone	Soil Graphic	SUBSURFACE MATERIAL	
0				SM			**SILTY SAND** (SM) Dark gray, moist	0.0
1	ST	010	■	SP-SM			**SILT with Sand** (SP-SM) woody debris, Dark gray, moist to wet	1.0
2				PT	■		**SILTY ORGANICS** (PT) fibrous, Reddish brown, moist to wet	2.5
3								
4								
5						BOH 5.5	Notes:	5.5

B USCS LOG OF TEST PIT CEHH2004.GPJ 2004TEMPLATE.GDT 1/10/05

APPENDIX D
Year 2000 Pedestrian Bridge Logs

LOG OF TEST HOLE

HOLE # TH-00-01

STATE OF ALASKA DOT&PF
Central Region Materials
Geology Section

PROJECT NUMBER: *53927*
PROJECT: *Chief Eddie Hoffman Rehabilitation*

Station / Location: *34+11 Pathway (Sept. 04 Drawing)*
Offset: *20 ft Rt. of Path CL*
Elevation: *4.0 ft*

Equipment Type: *Mobile B-50*
Drilling Method: *8" Hollow Auger*
Field Crew: *R. Briggs, J. Nelson*

Total Depth: *46.5 feet*
Date: *5/7/2000 - 5/7/2000*
Geologist: *T. OTTLEY*

Weather: Cloudy, 34 deg.

Ground Water Data		
Depth in (ft.)	3	8.0
Time		00:00
Date	5/7/00	5/7/00
Symbol	▼	▽

Depth (Feet)	Sample Type	Number	Blow Count	Sample	Recovery	N-Value	USCS Classification	Frozen Zone	Soil Graphic	SUBSURFACE MATERIAL	
0							OL			**ORGANIC SILT** (OL) contains wood and roots, Brown	0.0
											3.0
							OL			**ORGANIC SILT** (OL) Dark brown, wet, very loose	
5	SS	00-01	1 2							00-01 Moisture=24.7%, Org=3.7%	
											8.0
											9.0
10	SS	00-02	3 4				SM			**SILTY SAND** (SM) Gray, wet, very loose 00-02 p0.75μ=30%, Sa=70%, Moisture=33.0%	
											14.0
15							ML			**SANDY SILT** (ML) Gray, wet, loose	
	SS	00-03	1 2							Split spoon sank 0.3 ft from weight of rod. 00-03 Moisture=28.4%	16.0
20	SS	00-04	2 3 4							Combination of FS-00-03, 00-04 and 00-05 p0.075=60%, Sa=40%	20.0
25	SS	00-05	2 3 4							00-05 Moisture=32.1%	
											28.0
											29.0
30	SS	00-06	3 3 3				SM			**SILTY SAND** (SM) Gray, wet, loose 00-06 Moisture=23.9%	
										Combination of FS-00-06, 00-07, 00-08, and 00-09 SILTY SAND, A-1-B(0), LL=NV, PI=NP, p0.075=14%, Sa=86%,	32.0
35	SS	00-07	2 3 3							00-07 Moisture=22.1%	
											39.0
											40.0
40	SS	00-08	2 3 3				SW			**SAND** (SW) Gray, wet, loose 00-08 Moisture=23.0%	
45	SS	00-09	2 3 4							00-09 Moisture=28.8%	
									BOH 46.5		46.5

Notes:
1. Stations based on field swing tie measurements.
2. Installed 44 ft of 1.18 in. dia. PVC pipe capped with monitor well cap.

☐ CME Auto Hammer ☒ Cathead Rope Method ☒ 140 lb. hammer with 30 in. drop ☐ 340 lb. hammer with 30 in. drop

A USCS LOG OF TEST HOLE PEDBRIDGE2000USCS.GPJ 2004TEMPLATE.GDT 1/10/05

LOG OF TEST HOLE

HOLE # TH-00-03a

STATE OF ALASKA DOT&PF
Central Region Materials
Geology Section

PROJECT NUMBER: *53927*
PROJECT: *Chief Eddie Hoffman Rehabilitation*

Station / Location: *32+87 Pathway (Sept. 04 Drawing)*
Offset: *19 ft Rt. of Path CL*
Elevation: *4.3 ft*

Equipment Type: *Mobile B-50*
Drilling Method: *8" Hollow Auger*
Field Crew: *R. Briggs, J. Nelson*

Total Depth: *20.0 feet*
Date: *5/8/2000 - 5/8/2000*
Geologist: *T. OTTLEY*

Ground Water Data		
Depth in (ft.)	12.5	
Time		
Date	5/8/00	
Symbol	▼	

Weather: Ptly. Cloudy, 28 deg.

Depth (Feet)	Sample Type	Number	Blow Count	Sample	Recovery	N-Value	USCS Classification	Frozen Zone	Soil Graphic	SUBSURFACE MATERIAL
0							MH			**SANDY SILT to SILTY SAND** (MH) Gray, wet upon thaw (0.0)
							OL			**ORGANIC SILT** (OL) Brown, moist to wet, very loose (3.0)
5	SS	00-10	1 2							00-10 Moisture=72.7%, Org=6.7%
10	SS	00-11	1 2							00-11 Moisture=32.7%, Org=2.8% (12.5)
							ML			**SANDY SILT to SILTY SAND** (ML) Gray, wet, loose (13.5)
15	SS	00-12	2 4 6							00-12 Moisture=15.4%
20									BOH 20	(20.0)

Notes:
1. Stations based on field swing tie measurements.
2. Lost Testhole at 20 ft due to heaving sands. Moved 4 ft south and drilled straight to 25 ft and began sampling in TH 00-03b.

☐ CME Auto Hammer ☒ Cathead Rope Method ☒ 140 lb. hammer with 30 in. drop ☐ 340 lb. hammer with 30 in. drop

A USCS LOG OF TEST HOLE PEDBRIDGE2000USCS.GPJ 2004TEMPLATE.GDT 1/10/05

LOG OF TEST HOLE

HOLE # TH-00-03b

STATE OF ALASKA DOT&PF
Central Region Materials
Geology Section

PROJECT NUMBER: *53927*
PROJECT: *Chief Eddie Hoffman Rehabilitation*

Station / Location: *32+83 Pathway (Sept. 04 Drawing)*
Offset: *20 ft Rt. of Path CL*
Elevation: *4.6 ft*

Equipment Type: *Mobile B-50*
Drilling Method: *8" Hollow Auger*
Field Crew: *R. Briggs, J. Nelson*

Total Depth: *46.5 feet*
Date: *5/8/2000 - 5/8/2000*
Geologist: *T. OTTLEY*

Weather: Ptly. Cloudy, 28 deg.

Ground Water Data		
Depth in (ft.)		
Time		
Date		
Symbol		

Depth (Feet)	Sample Type	Number	Blow Count	Sample	Recovery	N-Value	USCS Classification	Frozen Zone	Soil Graphic	SUBSURFACE MATERIAL
0										Testhole TH-00-03b is 4 ft south of Testhole TH-00-03a. Began sampling at 25 ft below ground surface. (1.0)
5										
10										
15										
20										Frozen Soil Encountered (21.0)
25	SS	00-13	12 27 34	X			ML			**SANDY SILT to SILTY SAND** (ML) Gray, loose (25.0) 00-13 Moisture=29.3% Poorly bonded, no visible ice, temp. 34 deg. F Combination of FS-00-13 thru 00-17 (28.0) SANDY SILT, A-4(0), LL=NV, PI=NP, p0.075=50%, Sa=50%
30	SS	00-14	29 24 14	X						00-14 Moisture=30.4%
35	SS	00-15	9 10 14	X						00-15 Moisture=41.5% Poorly bonded, visible ice crystals, temp. 33.5 deg. F
40	SS	00-16	15 26 45	X						00-16 Moisture=28.6% Poorly bonded, icy sheen, temp. 34 deg. F
45	SS	00-17	41 62 55	X					BOH 46.5	Moisture=26.8% Poorly bonded, icy sheen, temp. 33.5 deg. F (46.5)

Notes:
1. Stations based on field swing tie measurements.
2. Installed 42 ft of 1.18 in. dia. PVC pipe, filled with anti-freeze, capped with monitor well cap

☐ CME Auto Hammer ☒ Cathead Rope Method ☒ 140 lb. hammer with 30 in. drop ☐ 340 lb. hammer with 30 in. drop

A USCS LOG OF TEST HOLE PEDBRIDGE2000USCS.GPJ 2004TEMPLATE.GDT 1/10/05

PENETROMETER LOG

HOLE # Pen-00-02

STATE OF ALASKA DOT&PF
Statewide Materials
Geology Section

PROJECT NUMBER: *53927*
PROJECT: *Chief Eddie Hoffman Rehabilitation*

Station / Location: *34+11 Pathway (Sept. 04 Drawing)*
Offset: *26 ft Rt. of Path CL*
Elevation: *3.9 ft*

Equipment Type: *Mobile B-50*
Drilling Method: *Penetrometer*
Field Crew: *R. Briggs, J. Nelson*

Total Depth: *45.0 feet*
Date: *5/8/2000 - 5/8/2000*
Geologist: *T. OTTLEY*

Weather: Cldy., snow, 28 deg.

1.75in

Depth	Blow Count
1	31
2	55
3	22
4	6
5	4
6	5
7	6
8	6
9	6
10	10
11	16
12	18
13	19
14	24
15	33
16	40
17	49
18	48
19	52
20	55
21	63
22	68
23	64
24	72
25	74
26	87
27	84
28	94
29	91
30	69
31	69
32	69
33	67
34	81
35	67
36	83
37	90
38	102
39	122
40	95
41	106
42	107
43	125
44	136
45	

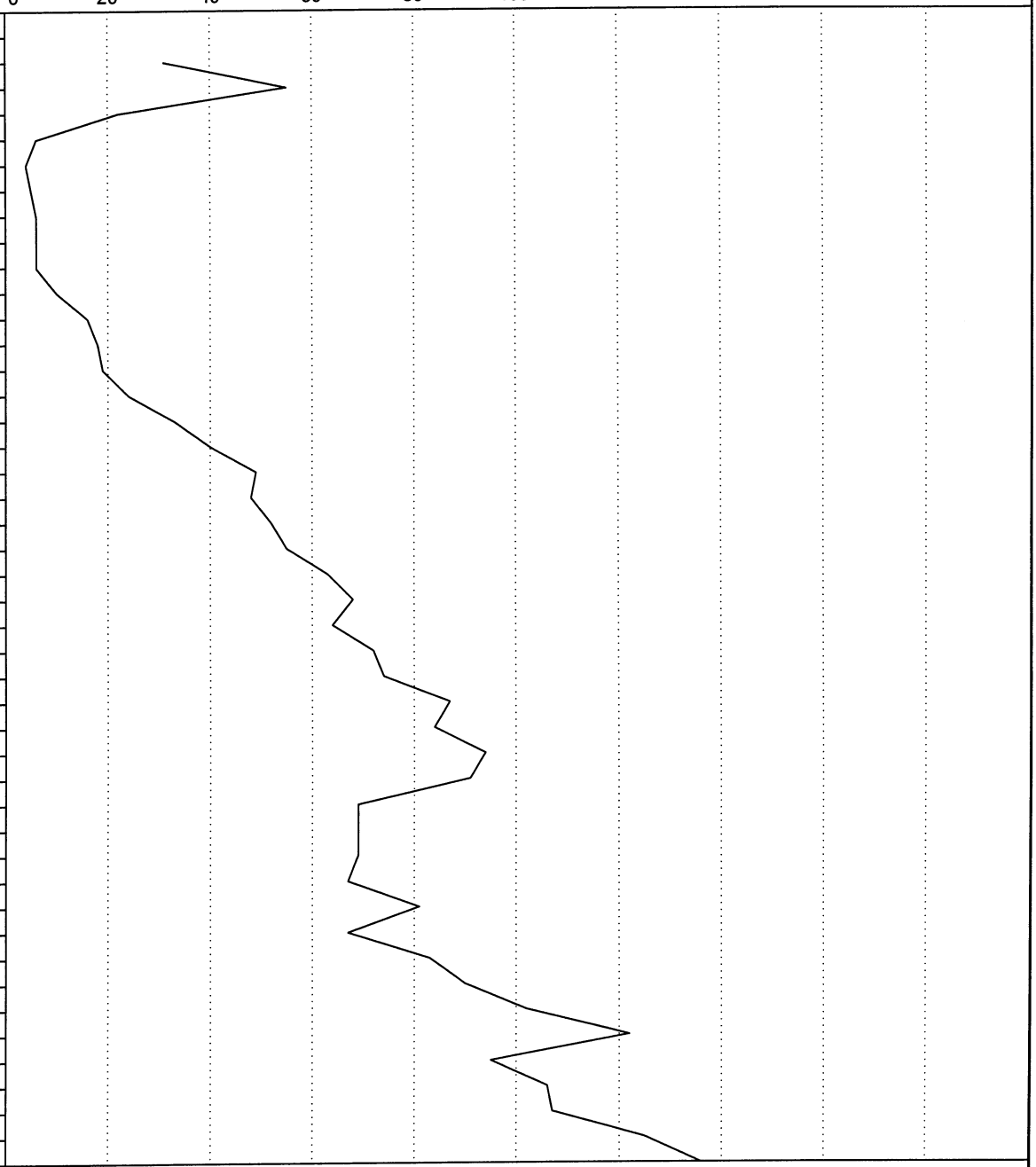

Bottom of Penetrometer Test at: 45 feet
Notes: 1. Stations based on field swing tie measurements.
2. Rotary - driving AW rod, 140# hammer, 30" drop. North abutment of proposed pedestrian bridge.

C USCS PEN LOG PEDBRIDGE2000USCS.GPJ 2004TEMPLATE.GDT 1/10/05

PENETROMETER LOG

HOLE # Pen-00-04

STATE OF ALASKA DOT&PF
Statewide Materials
Geology Section

PROJECT NUMBER: *53927*
PROJECT: *Chief Eddie Hoffman Rehabilitation*

Station / Location: *32+87 Pathway (Sept. 04 Drawing)*
Offset: *27 ft Rt. of Path CL*
Elevation: *4.9 ft*

Equipment Type: *Mobile B-50*
Drilling Method: *Penetrometer*
Field Crew: *R. Briggs, J. Nelson*

Total Depth: *27.0 feet*
Date: *5/9/2000 - 5/9/2000*
Geologist: *T. OTTLEY*

Weather: Cldy., snow, 27 deg.

1.75in

Depth	Blow Count
0	
1	50
2	62
3	35
4	6
5	10
6	12
7	10
8	18
9	49
10	55
11	47
12	66
13	54
14	86
15	72
16	73
17	82
18	90
19	92
20	105
21	95
22	91
23	89
24	85
25	98
26	150
27	

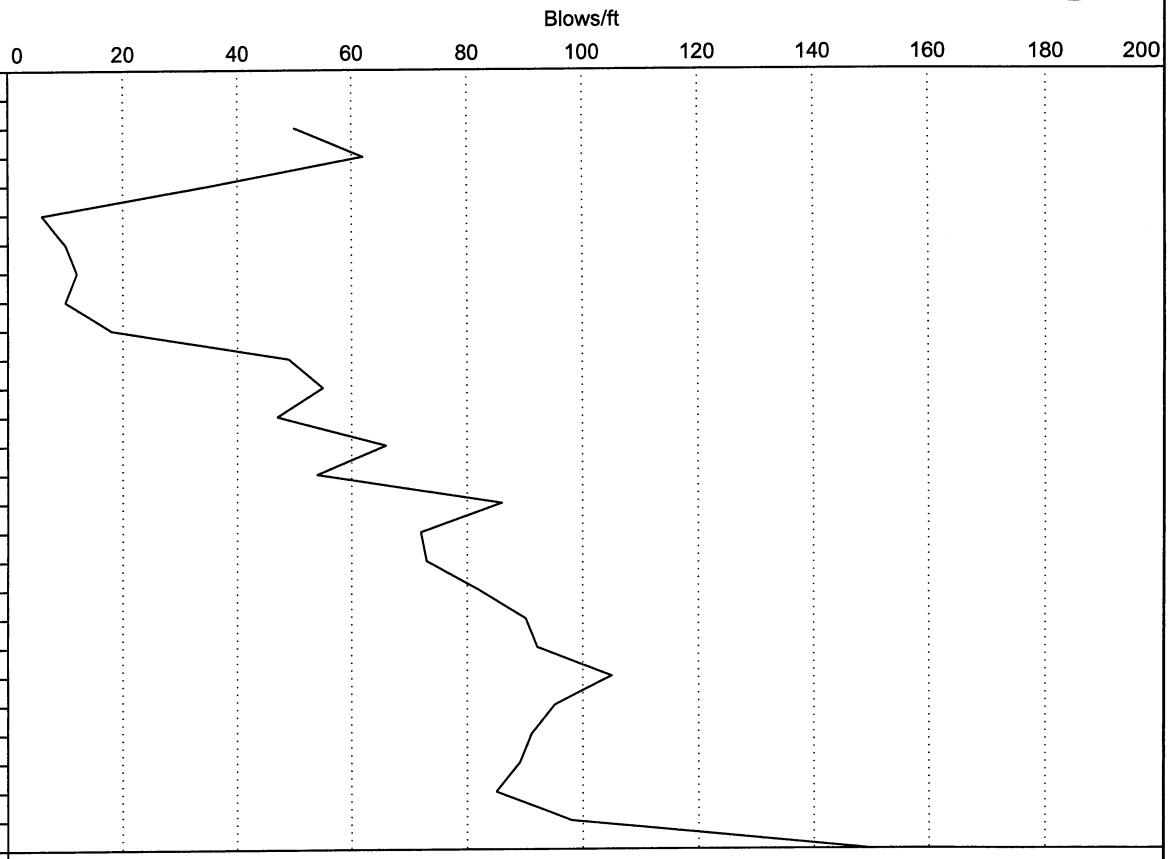

Bottom of Penetrometer Test at: 27 feet
Notes: 1. Stations based on field swing tie measurements.
2. Rotary - driving AW rod, 140# hammer, 30" drop. South abutment of proposed pedestrian bridge.

APPENDIX E
Laboratory Reports

PRECONSTRUCTION SAMPLE SUMMARY

Project Name Bethel Chief Eddie Hoffman Hwy.

Project No. 53927 Sampled By C. Roso

Centerline Bethel Chief Eddie Hoff-

Station							
Offset (feet)							
Depth (feet)		4.0'-5.5'	12.0'-13.5'	14.0'-15.5'	1.0'-2.5'	5.0'-6.5'	2.00'-3.25'
Test Hole No.		TH-04-01	TH-04-01	TH-04-01	TH-04-02	TH-04-02	TH-04-05/TS-1
Field No.		003	007	008	010	012	025
Date Sampled		06/05/2004	06/05/2004	06/05/2004	06/07/2004	06/07/2004	06/08/2004
Lab No.		04A-1120	04A-1121	04A-1122	04A-1123	04A-1124	04A-1125
Percent Passing Sieve Size	3"						
	2"						
	1"						
	3/4"	100			100		100
	1/2"	99			97		96
	3/8"	97			96		96
	#4	88		100	90		92
	#10	81		98	85		89
	#40	71		96	79		83
	#80						
	#200	15.1		49.9	13.2		9.4
	.02mm						
	.002mm						
AASHTO Class							
FSV Class							
Unified Class							
Liquid Limit							
Plastic Index							
Moisture Content %		10.5	152.1	87.2	5.2		4.8
Organic Content %			32.0	12.4			
% Gravel		12			10		8
% Sand		73		50	77		83
% Silt & Clay		15		50	13		9
Max. Dry Density							
Opt. Moisture %							
Degradation Value							
L.A. Abrasion Loss							
Sulfate Soundness		/	/	/	/	/	/

NOTE: Gradation Tests Based on Minus 3" Material. AASHTO class may be inappropriate if Organic Content > 5%.

PRECONSTRUCTION SAMPLE SUMMARY

Project Name Bethel Chief Eddie Hoffman Hwy.

Project No. 53927 Sampled By C. Roso

Centerline Bethel Chief Eddie Hoff-

Station							
Offset (feet)							
Depth (feet)		6.0'-7.5'	12.0'-13.5'	18.0'-19.5'	25.0'-26.0'	8.0'-9.5'	4.0'-5.5'
Test Hole No.		TH-04-05/TS-1	TH-04-05/TS-1	TH-04-05/TS-1	TH-04-05/TS-1	TH-04-06	TH-04-07
Field No.		027	030	033	035	040	044
Date Sampled		06/08/2004	06/08/2004	06/08/2004	06/08/2004	06/08/2004	06/08/2004
Lab No.		04A-1126	04A-1127	04A-1128	04A-1129	04A-1130	04A-1131
Percent Passing Sieve Size	3"						
	2"						
	1"						
	3/4"						
	1/2"	100					
	3/8"	99					
	#4	97					
	#10	95		100			
	#40	90		100			
	#80						
	#200	19.8		27.6			
	.02mm						
	.002mm						
AASHTO Class							
FSV Class							
Unified Class							
Liquid Limit							
Plastic Index							
Moisture Content %		14.8	3.6	19.7	20.6	101.8	11.1
Organic Content %		5.5				35.9	
% Gravel		3					
% Sand		77		72			
% Silt & Clay		20		28			
Max. Dry Density							
Opt. Moisture %							
Degradation Value							
L.A. Abrasion Loss							
Sulfate Soundness		/	/	/	/	/	/

NOTE: Gradation Tests Based on Minus 3" Material. AASHTO class may be inappropriate if Organic Content > 5%.

PRECONSTRUCTION SAMPLE SUMMARY

Project Name Bethel Chief Eddie Hoffman Hwy.

Project No. 53927 Sampled By C. Roso

Centerline Bethel Chief Eddie Hoff-

Station							
Offset (feet)							
Depth (feet)		6.0'-7.5'	10.0'-11.5'	12.0'-13.5'	12.0'-13.5'	6.0'-7.5'	8.0'-9.5'
Test Hole No.		TH-04-07	TH-04-08	TH-04-08	TH-04-09	TH-04-10	TH-04-10
Field No.		045	053	054	061	065	066
Date Sampled		06/08/2004	06/08/2004	06/08/2004	06/08/2004	06/08/2004	06/08/2004
Lab No.		04A-1132	04A-1133	04A-1134	04A-1135	04A-1136	04A-1137
Percent Passing Sieve Size	3"						
	2"						
	1"						
	3/4"						
	1/2"						
	3/8"						
	#4						
	#10		100		100		
	#40		87	100	100		
	#80						
	#200		65.5	53.2	96.5		
	.02mm						
	.002mm						
AASHTO Class			A-8	A-4(0)	A-4(2)		
FSV Class							
Unified Class			PT	ML	ML		
Liquid Limit			92	22	34		
Plastic Index			NP	NP	NP		
Moisture Content %		68.5	84.2	26.5	36.1	77.0	53.3
Organic Content %			25.8	4.5	8.0		
% Gravel							
% Sand			34	47	3		
% Silt & Clay			66	53	97		
Max. Dry Density							
Opt. Moisture %							
Degradation Value							
L.A. Abrasion Loss							
Sulfate Soundness		/	/	/	/	/	/

NOTE: Gradation Tests Based on Minus 3" Material. AASHTO class may be inappropriate if Organic Content > 5%.

PRECONSTRUCTION SAMPLE SUMMARY

Project Name Bethel Chief Eddie Hoffman Hwy.

Project No. 53927 Sampled By C. Roso Centerline Bethel Chief Eddie Hoff-

Station							
Offset (feet)							
Depth (feet)		10.0'-11.5'		10.0'-11.5'	14.0'-15.5'	16.0'-17.5'	20.0'-21.5'
Test Hole No.		TH-04-11		TH-04-12/TS-2	TH-04-12/TS-2	TH-04-12/TS-2	TH-04-12/TS-2
Field No.		069		070	071	072	074
Date Sampled		06/09/2004		06/09/2004	06/09/2004	06/09/2004	06/09/2004
Lab No.		04A-1138	04A-1139	04A-1140	04A-1141	04A-1142	04A-1143
Percent Passing Sieve Size	3"						
	2"						
	1"						
	3/4"						
	1/2"						
	3/8"						
	#4						
	#10			100	100	100	
	#40			99	99	100	100
	#80						
	#200			10.7	74.9	91.0	34.1
	.02mm						
	.002mm						
AASHTO Class					A-4(0)	A-5(4)	A-2-4(0)
FSV Class							
Unified Class					ML	ML	SM
Liquid Limit					NV	41	NV
Plastic Index					NP	NP	NP
Moisture Content %		22.8		20.8	94.4	40.1	20.8
Organic Content %							
% Gravel							
% Sand				89	25	9	66
% Silt & Clay				11	75	91	34
Max. Dry Density							
Opt. Moisture %							
Degradation Value							
L.A. Abrasion Loss							
Sulfate Soundness		/	/	/	/	/	/

NOTE: Gradation Tests Based on Minus 3" Material. AASHTO class may be inappropriate if Organic Content > 5%.

PRECONSTRUCTION SAMPLE SUMMARY

Project Name Bethel Chief Eddie Hoffman Hwy.

Project No. 53927 Sampled By C. Roso Centerline Bethel Chief Eddie Hoff-

Station							
Offset (feet)							
Depth (feet)		10.0'-11.5'	2.0'-3.5'	6.0'-7.5'	8.0'-9.5'	2.0'-3.5'	10.0'-11.5'
Test Hole No.		TH-04-13	TH-04-14	TH-04-14	TH-04-14	TH-04-15	TH-04-15
Field No.		078	079	080	081	083	085
Date Sampled		06/09/2004	06/10/2004	06/10/2004	06/10/2004	06/10/2004	06/10/2004
Lab No.		04A-1145	04A-1146	04A-1147	04A-1148	04A-1149	04A-1150
Percent Passing Sieve Size	3"						
	2"						
	1"						
	3/4"						
	1/2"						
	3/8"						
	#4						
	#10	100					
	#40	99					
	#80						
	#200	70.0					
	.02mm						
	.002mm						
AASHTO Class		A-4(0)					
FSV Class							
Unified Class		ML					
Liquid Limit		NV					
Plastic Index		NP					
Moisture Content %		71.1	14.9	121.5	98.9	18.7	91.8
Organic Content %		6.8					
% Gravel							
% Sand		30					
% Silt & Clay		70					
Max. Dry Density							
Opt. Moisture %							
Degradation Value							
L.A. Abrasion Loss							
Sulfate Soundness		/	/	/	/	/	/

NOTE: Gradation Tests Based on Minus 3" Material. AASHTO class may be inappropriate if Organic Content > 5%.

PRECONSTRUCTION SAMPLE SUMMARY

Project Name Bethel Chief Eddie Hoffman Hwy.

Project No. 53927 Sampled By C. Roso Centerline Bethel Chief Eddie Hoff-

Station							
Offset (feet)							
Depth (feet)		4.0'-5.5'	8.0'-9.5'	6.0'-7.5'	6.0'-7.5'	8.0'-9.5'	10.0'-11.5'
Test Hole No.		TH-04-16	TH-04-16	TH-04-17	TH-04-18	TH-04-18	TH-04-18
Field No.		087	088	093	097	098	099
Date Sampled		06/10/2004	06/10/2004	06/10/2004	06/10/2004	06/10/2004	06/10/2004
Lab No.		04A-1151	04A-1152	04A-1153	04A-1154	04A-1155	04A-1156
Percent Passing Sieve Size	3"						
	2"						
	1"	100					
	3/4"	96					
	1/2"	90					
	3/8"	86	100				
	#4	78	100				
	#10	71	98		100		
	#40	60	90		99		
	#80						
	#200	12.0	34.6		82.1		
	.02mm						
	.002mm						
AASHTO Class					A-5(7)		
FSV Class							
Unified Class					MH		
Liquid Limit					57		
Plastic Index					NP		
Moisture Content %		11.0	45.3	90.2	70.2	127.2	112.3
Organic Content %				24.2	12.3		
% Gravel		22					
% Sand		66	65		18		
% Silt & Clay		12	35		82		
Max. Dry Density							
Opt. Moisture %							
Degradation Value							
L.A. Abrasion Loss							
Sulfate Soundness		/	/	/	/	/	/

NOTE: Gradation Tests Based on Minus 3" Material. AASHTO class may be inappropriate if Organic Content > 5%.

PRECONSTRUCTION SAMPLE SUMMARY

Project Name Bethel Chief Eddie Hoffman Hwy.

Project No. 53927 Sampled By C. Roso Centerline Bethel Chief Eddie Hoff-

Station							
Offset (feet)							
Depth (feet)		2.0'-3.5'	6.0'-7.5'	10.0'-11.5'	12.0'-13.5'	14.0'-15.5'	16.0'-17.5'
Test Hole No.		TH-04-19	TH-04-19	TH-04-19	TH-04-19	TH-04-19	TH-04-19
Field No.		100	101	102	103	104	105
Date Sampled		06/10/2004	06/10/2004	06/10/2004	06/10/2004	06/10/2004	06/10/2004
Lab No.		04A-1157	04A-1158	04A-1159	04A-1160	04A-1161	04A-1162
	3"						
	2"						
	1"						
Percent	3/4"		100				
	1/2"		99				
Passing	3/8"		99			100	
	#4		98			99	
Sieve	#10		98			99	100
	#40		96			98	99
Size	#80						
	#200		8.3			18.3	86.0
	.02mm						
	.002mm						
AASHTO Class							A-5(4)
FSV Class							
Unified Class							ML
Liquid Limit							42
Plastic Index							NP
Moisture Content %		4.3	5.3	4.2	17.1	20.1	42.9
Organic Content %							8.0
% Gravel			2			1	
% Sand			90			81	14
% Silt & Clay			8			18	86
Max. Dry Density							
Opt. Moisture %							
Degradation Value							
L.A. Abrasion Loss							
Sulfate Soundness		/	/	/	/	/	/

NOTE: Gradation Tests Based on Minus 3" Material. AASHTO class may be inappropriate if Organic Content > 5%.

PRECONSTRUCTION SAMPLE SUMMARY

Project Name Bethel Chief Eddie Hoffman Hwy.

Project No. 53927 Sampled By C. Roso Centerline Bethel Chief Eddie Hoff-

Station							
Offset (feet)							
Depth (feet)		18.0'-19.5'	20.0'-21.5'	22.0'-23.5'	24.0'-25.5'	26.0'-27.5'	28.0'-29.5'
Test Hole No.		TH-04-19	TH-04-19	TH-04-19	TH-04-19	TH-04-19	TH-04-19
Field No.		106	107	108	109	110	111
Date Sampled		06/10/2004	06/10/2004	06/10/2004	06/10/2004	06/10/2004	06/10/2004
Lab No.		04A-1163	04A-1164	04A-1165	04A-1166	04A-1167	04A-1168
Percent Passing Sieve Size	3"						
	2"						
	1"						
	3/4"						
	1/2"						
	3/8"						
	#4						
	#10			100		100	
	#40	100		99	100	100	
	#80						
	#200	86.0		85.7	74.3	74.9	
	.02mm						
	.002mm						
AASHTO Class		A-4(0)		A-4(1)	A-4(0)	A-4(0)	
FSV Class							
Unified Class		ML		ML	ML	ML	
Liquid Limit		28		33	31	31	
Plastic Index		NP		NP	NP	NP	
Moisture Content %		35.7	50.3	62.0	40.0	35.0	31.0
Organic Content %		3.8	4.5	5.9	5.6		
% Gravel							
% Sand		14		14	26	25	
% Silt & Clay		86		86	74	75	
Max. Dry Density							
Opt. Moisture %							
Degradation Value							
L.A. Abrasion Loss							
Sulfate Soundness		/	/	/	/	/	/

NOTE: Gradation Tests Based on Minus 3" Material. AASHTO class may be inappropriate if Organic Content > 5%.

PRECONSTRUCTION SAMPLE SUMMARY

Project Name Bethel Chief Eddie Hoffman Hwy.

Project No. 53927 Sampled By C. Roso Centerline Bethel Chief Eddie Hoff-

Station							
Offset (feet)							
Depth (feet)		30.0'-31.5'	0.2'-0.7'	0.2'-0.7'	0.1'-0.6'	0.5'-1.0'	0.5'-1.0'
Test Hole No.		TH-04-19	TH-04-01	TH-04-02	TH-04-03	TH-04-04	TH-04-05/TS-1
Field No.		112	001	009	016	022	024
Date Sampled		06/10/2004	06/05/2004	06/07/2004	06/07/2004	06/07/2004	06/08/2004
Lab No.		04A-1169	04A-1170	04A-1171	04A-1172	04A-1173	04A-1174
Percent Passing Sieve Size	3"						
	2"		100	100	100		100
	1"		100	100	100	100	100
	3/4"		98	99	98	97	97
	1/2"		88	88	87	79	80
	3/8"		79	80	79	71	71
	#4		56	60	58	55	56
	#10		43	45	42	45	44
	#40		21	23	18	23	21
	#80						
	#200		6.0	7.7	5.0	7.8	6.4
	.02mm						
	.002mm						
AASHTO Class							
FSV Class							
Unified Class							
Liquid Limit							
Plastic Index							
Moisture Content %		28.2	2.7	2.8	3.1	2.3	2.0
Organic Content %							
% Gravel			44	40	42	45	44
% Sand			50	52	53	47	50
% Silt & Clay			6	8	5	8	6
Max. Dry Density							
Opt. Moisture %							
Degradation Value							
L.A. Abrasion Loss							
Sulfate Soundness		/	/	/	/	/	/

NOTE: Gradation Tests Based on Minus 3" Material. AASHTO class may be inappropriate if Organic Content > 5%.

PRECONSTRUCTION SAMPLE SUMMARY

Project Name Bethel Chief Eddie Hoffman Hwy.

Project No. 53927 Sampled By C. Roso Centerline Bethel Chief Eddie Hoff-

Station							
Offset (feet)							
Depth (feet)		0.2'-0.7'	0.25'-0.75'	0.25'-0.75'	0.6'-0.9'	0.1'-0.6'	0.2'-0.7'
Test Hole No.		TH-04-06	TH-04-07	TH-04-08	TH-04-09	TH-04-10	TH-04-13
Field No.		036	042	048	055	062	075
Date Sampled		06/08/2004	06/08/2004	06/08/2004	06/08/2004	06/08/2004	06/09/2004
Lab No.		04A-1175	04A-1176	04A-1177	04A-1178	04A-1179	04A-1180
	3"						
	2"	100	100		100	100	
	1"	99	99	100	96	100	100
Percent	3/4"	97	96	98	93	99	98
	1/2"	86	88	90	84	89	89
Passing	3/8"	77	81	81	78	82	79
	#4	58	60	60	65	62	58
Sieve	#10	47	48	48	58	46	41
	#40	28	23	24	44	21	20
Size	#80						
	#200	7.4	6.7	8.0	8.4	6.1	8.9
	.02mm						
	.002mm						
AASHTO Class							
FSV Class							
Unified Class							
Liquid Limit							
Plastic Index							
Moisture Content %		2.8	2.7	2.7	4.2	3.3	3.5
Organic Content %							
% Gravel		42	40	40	35	38	42
% Sand		51	53	52	57	56	49
% Silt & Clay		7	7	8	8	6	9
Max. Dry Density							
Opt. Moisture %							
Degradation Value							
L.A. Abrasion Loss							
Sulfate Soundness		/	/	/	/	/	/

NOTE: Gradation Tests Based on Minus 3" Material. AASHTO class may be inappropriate if Organic Content > 5%.

PRECONSTRUCTION SAMPLE SUMMARY

Project Name Bethel Chief Eddie Hoffman Hwy.

Project No. 53927 Sampled By C. Roso Centerline Bethel Chief Eddie Hoff-

Station							
Offset (feet)							
Depth (feet)		0.1'-0.6'	0.25'-0.75'	0.5'-1.0'	0.2'-0.6'	0.5'-1.0'	
Test Hole No.		TH-04-14	TH-04-15	TH-04-16	TH-04-17	TH-04-18	
Field No.		078	082	086	092	095	
Date Sampled		06/10/2004	06/10/2004	06/10/2004	06/10/2004	06/10/2004	
Lab No.		04A-1181	04A-1182	04A-1183	04A-1184	04A-1185	
Percent Passing Sieve Size	3"						
	2"		100	100	100		
	1"	100	97	99	99	100	
	3/4"	99	93	96	97	95	
	1/2"	87	85	89	90	78	
	3/8"	78	79	84	83	72	
	#4	54	64	69	65	58	
	#10	38	54	58	54	49	
	#40	18	34	40	35	29	
	#80						
	#200	8.0	7.6	6.1	7.2	8.4	
	.02mm						
	.002mm						
AASHTO Class							
FSV Class							
Unified Class							
Liquid Limit							
Plastic Index							
Moisture Content %		3.7	3.1	3.9	3.6	4.2	
Organic Content %							
% Gravel		46	36	31	35	42	
% Sand		46	56	63	58	50	
% Silt & Clay		8	8	6	7	8	
Max. Dry Density							
Opt. Moisture %							
Degradation Value							
L.A. Abrasion Loss							
Sulfate Soundness		/	/	/	/	/	/

NOTE: Gradation Tests Based on Minus 3" Material. AASHTO class may be inappropriate if Organic Content > 5%.

PRECONSTRUCTION SAMPLE SUMMARY

Project Name Bethel: Chief Eddy Hoffman Pathway

Project No. 53927 Sampled By Ottley Centerline

Station							
Offset (feet)							
Depth (feet)		1.5-2.0 m	3-3.5 m	4.6-5 m	6.1-6.6 m	7.6-8.1 m	9.2-9.6 m
Test Hole No.		TH 00-01	TH 00-01	TH 00-01	TH 00-01	TH 00-01	TH 00-01
Field No.		00-01	00-02	00-03	00-04	00-05	00-06
Date Sampled		05/07/2000	05/07/2000	05/07/2000	05/07/2000	05/07/2000	05/07/2000
Lab No.		00A-1078	00A-1079	00A-1080	00A-1081	00A-1082	00A-1083
	75						
	50						
	25.0						
Percent	19.0						
	12.5						
Passing	9.5						
	4.75						
Sieve	2.00		100				
	.425		99				
Size	.180						
	.075		30.0				
	.020						
	.002						
AASHTO Class							
FSV Class							
Unified Class							
Liquid Limit							
Plastic Index							
Moisture Content %		24.7	33.0	28.4		32.1	23.9
Organic Content %		3.7					
% Gravel							
% Sand			70				
% Silt & Clay			30				
Max. Dry Density							
Opt. Moisture %							
Degradation Value							
L.A. Abrasion Loss							
Sulfate Soundness		/	/	/	/	/	/

NOTE: Gradation Tests Based on Minus 75mm Material. AASHTO class may be inappropriate if Organic Content > 5%.

PRECONSTRUCTION SAMPLE SUMMARY

Project Name Bethel: Chief Eddy Hoffman Pathway

Project No. 53927 Sampled By Ottley Centerline

Station							
Offset (feet)							
Depth (feet)		10.7-11.1 m	12.2-12.7 m	13.7-14.2 m	1.5-2 m	3-3.5 m	4.6-5 m
Test Hole No.		TH 00-01	TH 00-01	TH 00-01	TH 00-03	TH 00-03	TH 00-03
Field No.		00-07	00-08	00-09	00-10	00-11	00-12
Date Sampled		05/07/2000	05/07/2000	05/07/2000	05/08/2000	05/08/2000	05/08/2000
Lab No.		00A-1084	00A-1085	00A-1086	00A-1087	00A-1088	00A-1089
Percent Passing Sieve Size	75						
	50						
	25.0						
	19.0						
	12.5						
	9.5						
	4.75						
	2.00						
	.425						
	.180						
	.075						
	.020						
	.002						
AASHTO Class							
FSV Class							
Unified Class							
Liquid Limit							
Plastic Index							
Moisture Content %		22.1	23.0	28.8	72.7	32.7	15.4
Organic Content %					6.7	2.8	
% Gravel							
% Sand							
% Silt & Clay							
Max. Dry Density							
Opt. Moisture %							
Degradation Value							
L.A. Abrasion Loss							
Sulfate Soundness		/	/	/	/	/	/

NOTE: Gradation Tests Based on Minus 75mm Material. AASHTO class may be inappropriate if Organic Content > 5%.

PRECONSTRUCTION SAMPLE SUMMARY

Project Name Bethel: Chief Eddy Hoffman Pathway

Project No. 53927 Sampled By Ottley Centerline

Station							
Offset (feet)							
Depth (feet)		7.6-8.1 m	9.2-9.6 m	10.7-11.1 m	12.2-12.7 m	16.3-16.7 m	4.6-8.1 m
Test Hole No.		TH 00-03	TH 00-03	TH 00-03	TH 00-03	TH 00-03	TH 00-01
Field No.		00-13	00-14	00-15	00-16	00-17	03-05
Date Sampled		05/08/2000	05/08/2000	05/08/2000	05/08/2000	05/08/2000	05/07/2000
Lab No.		00A-1090	00A-1091	00A-1092	00A-1093	00A-1094	00A-1095
Percent Passing Sieve Size	75						
	50						
	25.0						
	19.0						
	12.5						
	9.5						
	4.75						
	2.00						100
	.425						100
	.180						
	.075						59.7
	.020						
	.002						
AASHTO Class							
FSV Class							
Unified Class							
Liquid Limit							
Plastic Index							
Moisture Content %		29.3	30.4	41.5	28.6	26.8	
Organic Content %							
% Gravel							
% Sand							40
% Silt & Clay							60
Max. Dry Density							
Opt. Moisture %							
Degradation Value							
L.A. Abrasion Loss							
Sulfate Soundness		/	/	/	/	/	/

NOTE: Gradation Tests Based on Minus 75mm Material. AASHTO class may be inappropriate if Organic Content > 5%.

PRECONSTRUCTION SAMPLE SUMMARY

Project Name Bethel: Chief Eddy Hoffman Pathway

Project No. 53927 Sampled By Ottley Centerline

Station							
Offset (feet)							
Depth (feet)		9.2-14.2 m	7.6-16.7 m				
Test Hole No.		TH 00-02	TH 00-03				
Field No.		06-09	13-17				
Date Sampled		05/07/2000	05/08/2000				
Lab No.		00A-1096	00A-1097				
Percent Passing Sieve Size	75						
	50						
	25.0						
	19.0						
	12.5						
	9.5						
	4.75		100				
	2.00	100	100				
	.425	40	99				
	.180						
	.075	14.3	49.9				
	.020						
	.002						
AASHTO Class		A-1-b(0)	A-4(0)				
FSV Class							
Unified Class							
Liquid Limit		NV	NV				
Plastic Index		NP	NP				
Moisture Content %							
Organic Content %							
% Gravel							
% Sand		86	50				
% Silt & Clay		14	50				
Max. Dry Density							
Opt. Moisture %							
Degradation Value							
L.A. Abrasion Loss							
Sulfate Soundness		/	/	/	/	/	/

NOTE: Gradation Tests Based on Minus 75mm Material. AASHTO class may be inappropriate if Organic Content > 5%.

Contaminated Sites Review

City of Bethel Institutional Corridor Water Delivery System

January 14, 2015

Contaminated Sites Review

Upon an initial review, the project vicinity was found to be adjacent to four sites (Figure 1):

1. IHS YK Delta Regional Hospital Bldg. 600 (Hazard ID: 2612)
2. IHS YK Delta Regional Hospital (Hazard ID: 1550)
3. Bethel Utilities Corp. Power Plant (Hazard ID: 2450)
4. USFWS - Yukon Delta NWR Headquarters (Hazard ID: 22900)

These sites were further investigated to determine the potential to affect subsurface conditions in the project corridor. For the purposes of this memo, the project corridor is identified as a 20-foot-wide area around the 8-inch water main identified in blue in Figure 1.

To determine the level of risk posed by each of these sites, Alaska Department of Environmental Conservation (ADEC) staff was interviewed, additional records pertaining to the sites were obtained, and the area's subsurface was evaluated for its potential to convey contamination. This memo contains a summary of each site; details obtained through interview or additional records and a conclusion on risk and suggested next steps.

1. **IHS YK Delta Regional Hospital Bldg. 600 (Hazard ID: 2612)**
   Status: Cleanup Complete - Institutional Controls
   In 1996, approximately 150 gallons of fuel oil were spilled near building 600 and during excavation of the affected soil in 1997, additional contamination was encountered at approximately 4-5 feet below ground surface (bgs) that was unrelated to the spill and not otherwise documented prior. Cleanup has only extended to the 150 gallon-spill, which resulted in removal of approximately 272 cubic yards of soil. The soil was stockpiled at the Old Hospital sites. Sometime during prior management this site was rolled into the complete Old Hospital site (Hazard ID: 1550) and this site is deemed inactive and resolved. According to ADEC staff (Debenham, personal communication), any plans for excavation near building 600 should be prepared to encounter subsurface contamination. According to a 2014 feasibility study (CH2MHill), there is indication that Building 600 will soon be demolished and removed. Background files from ADEC are included in Attachment 1.

Recommendations:

(a) For any excavation deeper than two feet, and within 100 feet of the building 600 site, have a PID on hand and a plan for encountering contamination.
(b) Follow recommendations outlined in the ADEC March 2014 Technical Memorandum "Managing Petroleum-Contaminated Soil, Water, or Free Product during Public Utility and Right-of-Way Construction and Maintenance Projects" (Attachment 2).
(a) Comply with site-specific conditions:
    a. 1. Any proposal to transport soil or groundwater off-site requires ADEC approval in accordance with 18 AAC 75.325. 2. Movement or use of contaminated material in a

manner that results in a violation of 18 AAC 70 water quality standards is prohibited. This determination does not preclude ADEC from requiring additional assessment and/or cleanup action if future information indicates that this site may pose an unacceptable risk to human health or the environment.

2. **IHS YK Delta Regional Hospital (Hazard ID: 1550)**
   Status: Cleanup Complete - Institutional Controls
   The ADEC database showed this site to be located just south of the current site of the YKHC Hospital. During further review, ADEC staff indicated that the GIS location of the site was inaccurate. When the data was corrected, the site is far enough from the project area (north of Old Hospital Road and east of Chief Eddy Hoffman Hwy) that no further investigation is warranted.

Recommendations: None.

3. **Bethel Utilities Corp. Power Plant (Hazard ID: 2450)**
   Status: Active
   This site has several areas where petroleum hydrocarbon and associated contamination has been documented in the soil and groundwater, including Trichloroethylene (TCE). There are six main locations within the property identified, with the closest occurring northeast of bulk storage tanks in a low-lying area approximately 100 feet from the project corridor. A 1994 report showed contamination levels to be over 500 ppm for total petroleum hydrocarbons at 2-feet bgs and 1,480 ppm at 8-feet bgs approximately 10 feet east of the storage tanks. Additionally, TCE was identified in the groundwater approximately 50 feet north of the storage tanks at .105 ppm. These two areas of contamination lay upgrade from the project corridor and in a drier area. It is likely that contamination in groundwater would flow into the project area.

Recommendations:

(a) If any ground disturbance occurs within 200 feet of these two sites, have a PID on hand and a plan for encountering contamination.
(b) Follow recommendations outlined in the ADEC March 2014 Technical Memorandum "Managing Petroleum-Contaminated Soil, Water, or Free Product during Public Utility and Right-of-Way Construction and Maintenance Projects" (Attachment 2).

4. **USFWS - Yukon Delta NWR Headquarters (Hazard ID: 22900)**
   Status: Cleanup Complete
   Petroleum contaminated soil was documented at this site in 1993. No information was available on the website and a message has been left to get more information from ADEC staff. Although the status is 'complete,' the ADEC website's page for this site states that "advance approval required to transport soil or groundwater off-site." Based on that statement and the site's close proximity to the project, more information is needed, however the site files have been archived

and are not readily available. ADEC staff have been contacted and the files have been requested but it is unlikely they will be retrieved prior to initiating this project.

Recommendations:

(a) If any ground disturbance occurs within 200 feet of the property boundary, have a PID on hand and a plan for encountering contamination.
(b) Follow recommendations outlined in the ADEC March 2014 Technical Memorandum "Managing Petroleum-Contaminated Soil, Water, or Free Product during Public Utility and Right-of-Way Construction and Maintenance Projects" (Attachment 2).

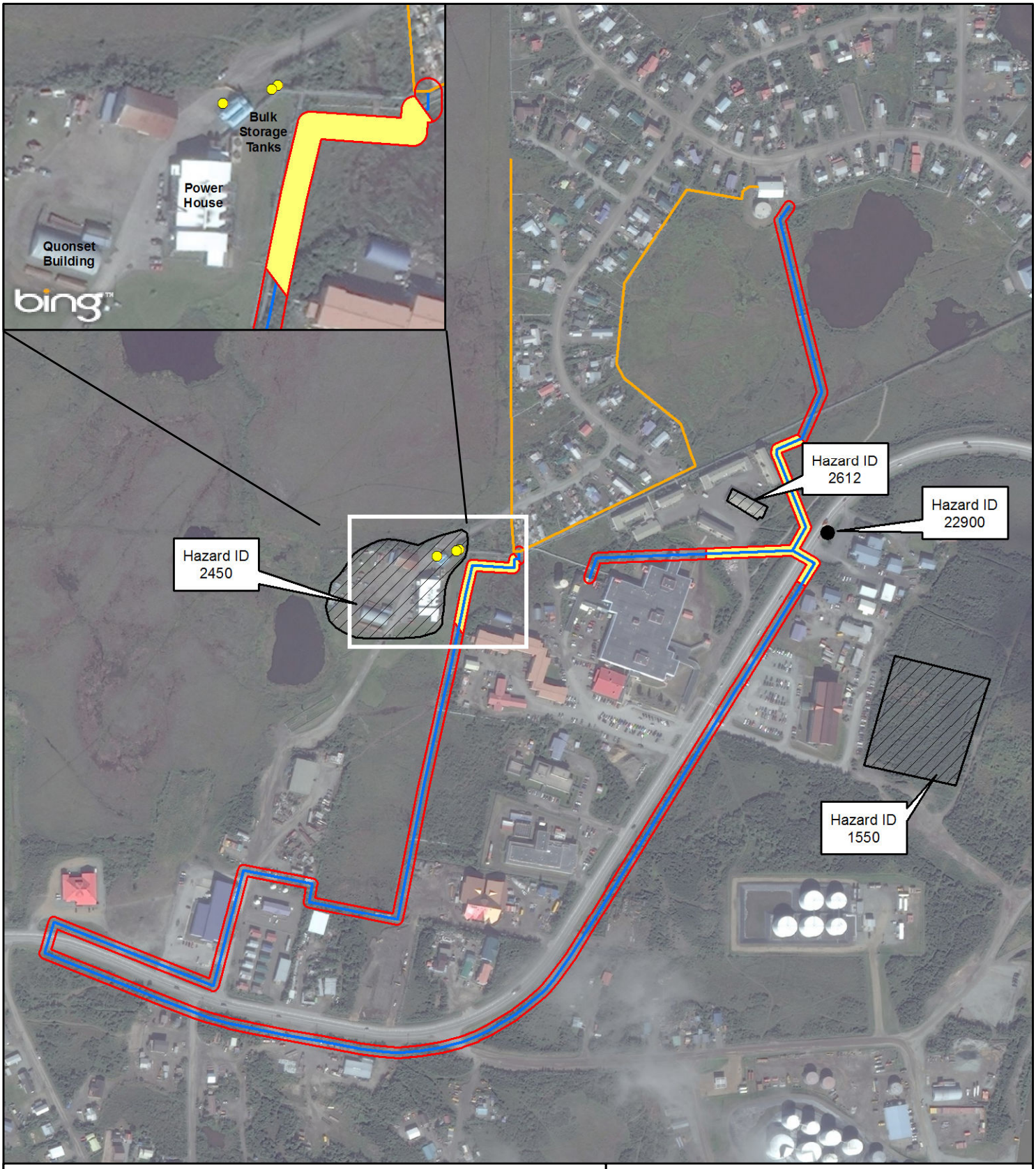

Diameter
6"
8"

Project Area
Areas where plan for contamination is recommended
Contaminated Sites
1995 Sampling Locations

Service Layer Credits: © 2014 DigitalGlobe Earthstar Geographics SIO © 2014 Microsoft Corporation

N

0 500 1,000 Feet

Figure
Contaminated Sites

Institutional Corridor Piped Water System
Bethel, Alaska

DOWL

January 15, 2015 | 61833

Q:\23\61833-01\60GIS\Contaminated Sites.mxd Jan 15, 2015 5:33:08 PM User: cfelker

ATTACHMENT 1

TONY KNOWLES, GOVERNOR

DEPT. OF ENVIRONMENTAL CONSERVATION

DIVISION OF SPILL PREVENTION AND RESPONSE
PREVENTION AND EMERGENCY RESPONSE PROGRAM
BETHEL FIELD OFFICE
P.O. BOX 557
108B-2 STATE HIGHWAY

P.O. Box 557
Bethel, AK 99559
PHONE: (907) 543-3215
FAX: (907) 543-3216
http://www.state.ak.us/dec/home.htm

RECEIVED
NOV 17 1999
DEPARTMENT OF ENVIRONMENTAL CONSERVATION

November 12, 1999

Mr. Dan Carpenter, P.E.
Engineering Services
3925 Tudor Centre Drive
Anchorage, AK 99508-5997

Re: Spill #96-27-99-349-01 YKHC 600 Building, and Spill #97-27-99-273-01 YKHC Back Ramp

Dear Dan:

I have received your November 1, 1999 letter and the lab results from the final sampling of the YKHC 600 building spill. The samples are all well below the respective cleanup levels for DRO/GRO, and we can finally close out this spill. I have requested final spill reports from Dusan Kovac of YKHC for both this spill and the ramp spill, as YKHC is the responsible party for both of these spills. When I receive them, I'll close our files on these spills.

Thank you for all of your help in getting these spills finally cleaned up. They have taken an inordinate amount of time for both of us, and I appreciate your efforts to get these situations resolved. Let's hope that YKHC puts more energy into spill prevention measures in the future.

Sincerely,

Bob

Bob Carlson
Environmental Specialist III

Cc: Shah Alam, ADEC/SPAR/CS

DEPARTMENT OF HEALTH & HUMAN SERVICES Public Health Service

The Alaska Area Native Health Service

Facsimile Cover Sheet

To: Bob Carlson
Company: **ADEC Bethel**
Phone: **543-3215**
Fax: **543-3216**

From: Dan Carpenter, P.E.
Company: Engineering Services
3925 Tudor Centre Drive
Anchorage, Alaska 99508-5997
Phone: (907) 729-3615
Fax: (907) 271-4735

Date: **November 1, 1999**
Pages including cover :

Comments: Bob – We now have the lab results back for the final sampling of the excavated hot spot at the YKHC hospital site (Bldg. 600). Attached is a copy of the chain of custody for the sampling that was conducted on October 6, 1999. Also attached is a revised site plan that shows the limits of excavation and the location where four wall (plus 1 duplicate) samples and 1 floor sample were collected. A summary table is provided along with the original lab analysis for each sample. The lab results confirm the field screening results that you witnessed at the site. It appears that all petroleum contaminated soil has been excavated from the site. Please advise if you require any additional information. - On a separate issue, we have accomplished the relocation of the final stockpiles of contaminated soil from and beneath the ramp at the YKHC Hospital site to the Old Hospital Site. We will deal with Shah on the remediation of the stockpiled soil. Thank you for your cooperation and patience.

Distance (ft -approx) from Sampling Location to Temporary Benchmark

Sample #	A	B	C	D
2North	-	-	22	13
2South	-	-	36	23
2East	-	-	43	33
2West	-	-	31	15
2Bottom	-	-	30	23

Summary Table of Results of Laboratory Analysis of Excavation
Bldg. 600 - YKHC Hospital (10/6/99)

Sample #	DRO	GRO	RRO
2North	152	3	197
2South	114	3	140
2East	34	3	163
2West	113	2	133
2West (duplicate)	141		
2Bottom	85	5	377

Note – Above readings are in mg/kg.

12/03/99 FRI 09:21 FAX 907 543 3216 ADEC Bethel Field Office 003
Nov 01 99 10:39a Div of Health Facilities 907-271-4735 p.2

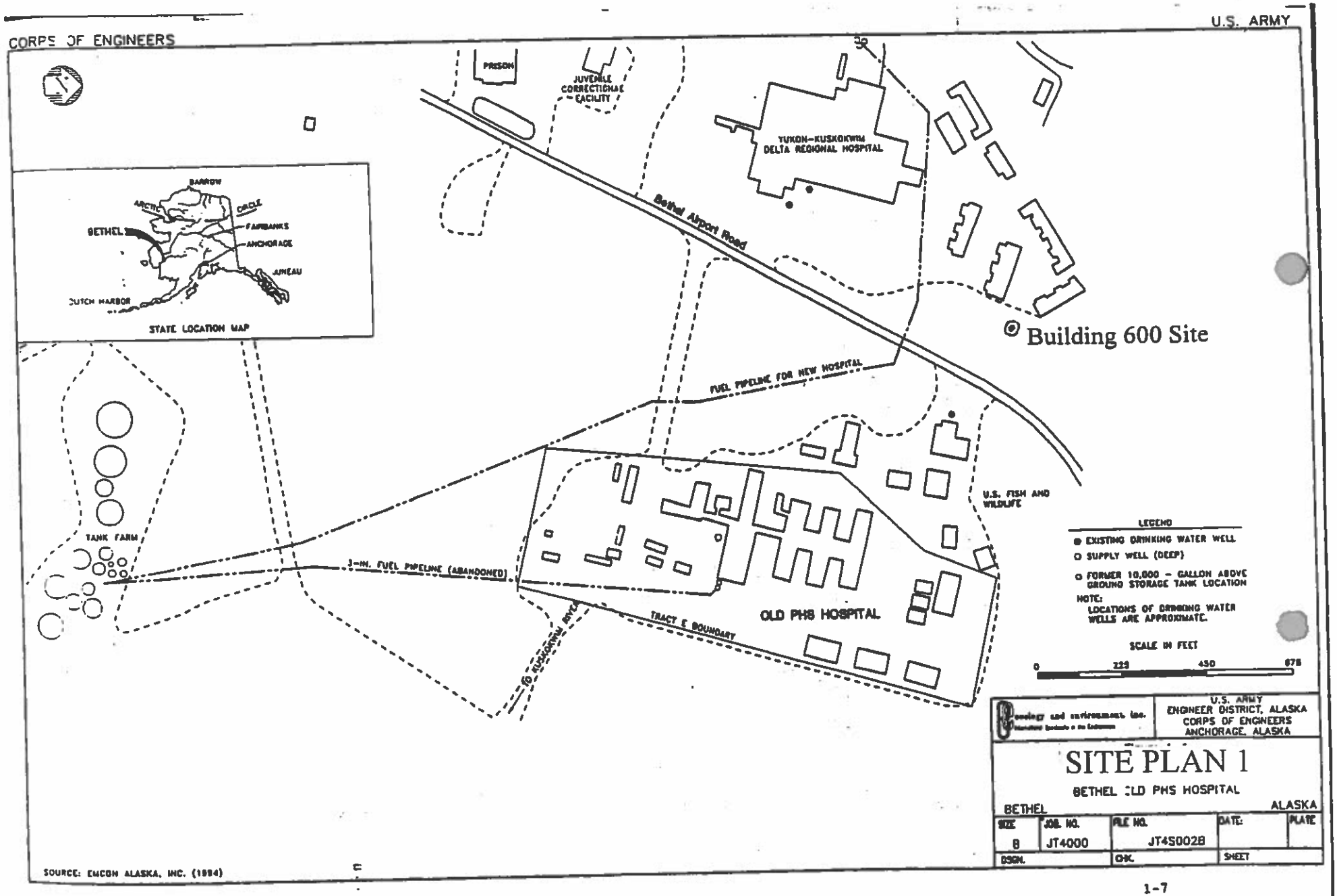
CORPS OF ENGINEERS
U.S. ARMY
PRISON
JUVENILE CORRECTIONAL FACILITY
YUKON-KUSKOKWIM DELTA REGIONAL HOSPITAL
Bethel Airport Road
Building 600 Site
BARROW
ARCTIC CIRCLE
BETHEL
FAIRBANKS
ANCHORAGE
JUNEAU
DUTCH HARBOR
STATE LOCATION MAP
FUEL PIPELINE FOR NEW HOSPITAL
U.S. FISH AND WILDLIFE
TANK FARM
3-IN. FUEL PIPELINE (ABANDONED)
OLD PHS HOSPITAL
TRACT E BOUNDARY
TO KUSKOKWIM AVE
LEGEND
EXISTING DRINKING WATER WELL
SUPPLY WELL (DEEP)
FORMER 10,000 - GALLON ABOVE GROUND STORAGE TANK LOCATION
NOTE:
LOCATIONS OF DRINKING WATER WELLS ARE APPROXIMATE.
SCALE IN FEET
0
225
450
675
U.S. ARMY
ENGINEER DISTRICT, ALASKA
CORPS OF ENGINEERS
ANCHORAGE, ALASKA
SITE PLAN 1
BETHEL OLD PHS HOSPITAL
BETHEL
ALASKA
SIZE
B
JOB. NO.
JT4000
FILE NO.
JT4S002B
DATE:
PLATE
DSGN.
CHK.
SHEET
SOURCE: EMCON ALASKA, INC. (1994)

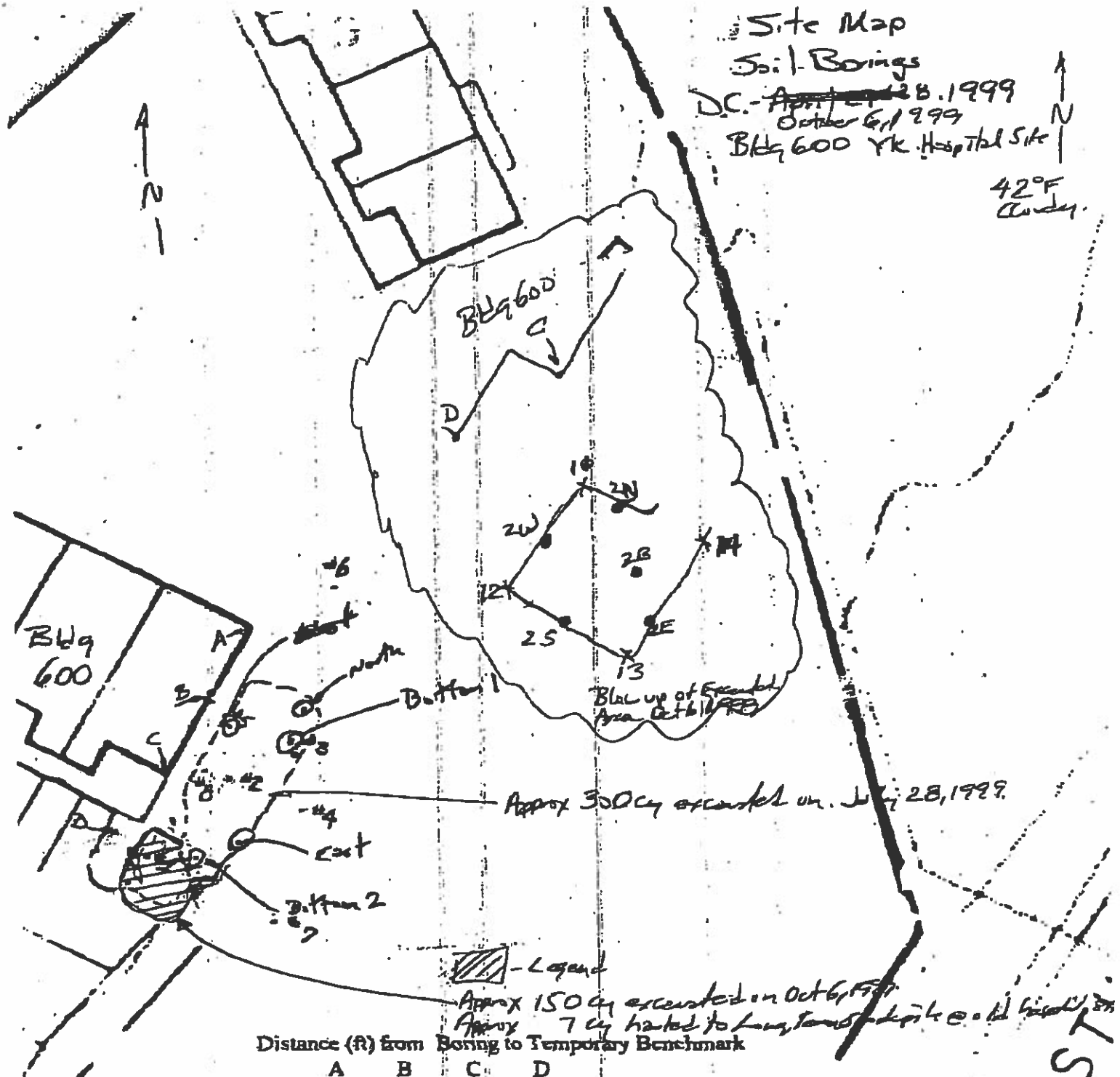

Distance (ft) from Boring to Temporary Benchmark

	A	B	C	D
11	-	-	23	28
12	-		36	8
13	-		46	22
14	-		34	34
2N	-		22	13
2W			31	15
2B	-	-	36	23
2S	-		43	33
2E				

ATTACHMENT 2

ALASKA DEPARTMENT OF ENVIRONMENTAL CONSERVATION
DIVISION OF SPILL PREVENTION AND RESPONSE

Managing Petroleum-Contaminated Soil, Water, or Free Product during Public Utility and Right-of-Way Construction and Maintenance Projects

Technical Memorandum **Date: March 2014**

Purpose

This Technical Memorandum outlines procedures for managing petroleum-contaminated soil or water[1], or free-phase petroleum product related to either documented or unknown sources, as it may be encountered during the course of construction projects in utility corridors and rights-of way. The objectives are to prevent delays in the construction activities but also to prevent the migration and improper management of contaminated media which could exacerbate environmental problems. Further, while it is ideal to remove accessible contaminated soil, water, or free-product when it is encountered in a utility right-of-way, the Department of Environmental Conservation (DEC) recognizes that there are circumstances where this may not be practical. Under the conditions described in this Technical Memorandum, Contaminated Sites Program (CSP) or Prevention and Emergency Response Program (PERP) staff may approve petroleum-contaminated soil to be returned to an excavation from where it originated.

Applicability

This Technical Memorandum applies only to petroleum-contaminated soil and water and free-phase petroleum product. It does not apply to non-petroleum contamination, nor the transport, treatment, or disposal of soil regulated as hazardous waste under the Resource Conservation and Recovery Act (RCRA) or other federal environmental and hazardous waste requirements. Additionally this guidance does not apply to landowners or operators of contaminated sites who conduct or direct excavation activities on their own property; such activities are subject to the regulatory requirements of 18 AAC 75 and 18 AAC 78.

Project Planning and DEC Coordination

1. Prior to the start of any construction or excavation project, identify all contaminated sites and active spills in the area by querying the Contaminated Sites Database (http://dec.alaska.gov/spar/csp/db_search.htm) and the Spills Database (http://dec.alaska.gov/spar/perp/data.htm).

2. During construction, if contaminated soil, groundwater, or free phase petroleum product is encountered and determined to be associated with a known contaminated site, the construction contractor or other project representative shall contact the appropriate DEC staff to ensure that contamination in the corridor is managed and documented as deemed necessary.

3. For planned construction or maintenance activities in an area or depth where contaminated media may be encountered, the utility company or their contractors must develop a contaminated soil /groundwater management plan in advance for review and approval by CSP under 18 AAC 75.325(i) so that the appropriate procedures and materials are in place prior to the beginning of the

[1] "Contaminated soil or groundwater" means concentrations of petroleum exceed applicable cleanup levels as determined under the site cleanup rules at 18 AAC 75.325.

project. In some cases the contaminated area may be addressed with a current or future remediation or product recovery system.

4. If contaminated soil, groundwater, or free-product are encountered and the source is unknown, the construction contractor or other project representative shall immediately contact PERP staff in accordance with spill reporting requirements under 18 AAC 75.300, and coordinate management of all contaminated media with emergency response personnel.

Project Implementation

Management of Contaminated Water and Free Product

Construction activities must not increase the potential for contamination to migrate, or otherwise adversely affect human health or the environment. Engineering controls may be required in the utility excavation to prevent the creation of a preferential pathway for the migration of contaminated water and free product.

If contaminated water is encountered and must be removed as part of the construction activities, the PERP or CSP project manager must be notified immediately to determine what actions are required to containerize or manage, properly treat and/or dispose of the contaminated water to prevent contaminant migration.

If free-phase petroleum product is encountered in soil or groundwater, the CSP or PERP staff must be notified immediately to determine necessary response actions for collecting and containerizing the product to prevent contaminant migration.

Leaving or Returning Contaminated Material to the Excavation

PERP or CSP staff may grant approval for petroleum-contaminated soil to be returned to a public utility or right-of-way excavation subject to the following conditions:

1. The owner/responsible party of the property identified as the source of the contamination should be consulted and afforded an opportunity to collect samples and/or concur with the plan to return the contaminated soil to the excavation because installation of utilities may limit future remedial options. However, the owner/responsible party may not delay or stop the utility or construction work.

2. As appropriate and feasible, the PERP or CSP may request sampling to document concentrations of in-situ contamination.

3. The CSP may determine that Institutional Controls under 18 AAC 75.375 are necessary to protect other parties from future exposure to contamination left in place following the project.

4. Any contaminated soil must be returned to approximately the same depth and location from which it was excavated, provided the top two feet of fill is clean material. Mixing of contaminated excavated soil with uncontaminated material is not approved.

5. When previously unknown areas of contamination are discovered, the location of the contamination must be documented with GPS coordinates in decimal degrees with six decimal places of precision using either WGS 1984 or NAD 1983 horizontal datum (be sure to specify which are used).

6. Any contaminated soil removed from a construction excavation may be stockpiled temporarily on a week-by-week basis as needed to facilitate construction objectives such as installing equipment, piping, or necessary structures. Stockpiled soil must remain in the immediate area (on site) and be on a liner, asphalt or concrete, and securely covered with 6-mil HDPE minimum, pursuant to 18 AAC 75.370, to prevent contaminant migration into storm water runoff.

Soil not returned to the Excavation

Any contaminated soil that is not returned to the excavation must be stored, transported and disposed of in accordance with 18 AAC 75.370 following DEC approval (see attached form).

This technical memorandum is not intended to allow avoidance of the duties of responsible persons to investigate, contain, and clean up a discharge or release of a hazardous substance, or to interfere with, hinder, or obstruct the containment or cleanup of a hazardous substance conducted under 18 AAC 75 and/or 18 AAC 78. DEC reserves all rights to require responsible persons to take further action.

DEC Contaminated Sites Program (CSP) Offices:

Juneau
Phone: (907) 465-5390/Fax: (907) 465-5218

Anchorage
Phone: (907)269-7503/Fax: (907) 269-7649

Fairbanks
Phone: (907) 451-2143/ Fax: (907) 451-5105

Soldotna/Kenai Office
Phone: (907) 262-5210/Fax: (907) 262-2294

DEC Prevention and Emergency Response (PERP) Offices (Report a Spill):

Southeast (Juneau) Phone: (907) 465-5340/Fax (907)465-2237

Central (Anchorage/Kenai/Soldotna) Phone: (907)269-3063/Fax (907)269-7648

Northern (Fairbanks) Phone: (907) 451-2121/Fax (907)451-2362

ALASKA DEPARTMENT OF ENVIRONMENTAL CONSERVATION
DIVISION OF SPILL PREVENTION AND RESPONSE
Contaminated Sites Program

Contaminated Soil Transport and Treatment Approval Form

DEC HAZARD ID #	NAME OF CONTAMINATED SITE	
SPILL LOCATION		
CONTAMINATED SOIL'S CURRENT LOCATION	**SOURCE OF THE CONTAMINATION**	
TYPE OF CONTAMINATION	**ESTIMATED VOLUME**	**DATE(S) STOCKPILE GENERATED**
POST TREATMENT ANALYSIS REQUIRED *(such as GRO, DRO, RRO, BTEX, and/or Chlorinated Solvents)*		
COMMENTS		

Facility Accepting the Contaminated Soil

NAME OF THE FACILITY	ADDRESS/PHONE NUMBER

Responsible Party and Contractor Information

BUSINESS/NAME	ADDRESS/PHONE NUMBER

Name of the Person Requesting Approval (printed) | Title/Association

Signature | Date | Phone Number

----------DEC USE ONLY----------

Based on the information provided, ADEC approves transport of the above mentioned material for treatment in accordance with the approved facility operations plan. The Responsible Party or their consultant must submit to the DEC Project Manager a copy of weight receipts of the loads transported to the facility and a post treatment analytical report. The contaminated soil shall be transported as a covered load in compliance with 18 AAC 60.015.

DEC Project Manager Name (printed) | Project Manager Title

Signature | Date | Phone Number

ATTACHMENT D

INSTITUTIONAL CORRIDOR
PIPED WATER SYSTEM
CITY OF BETHEL
BETHEL, ALASKA

LOCATION MAP

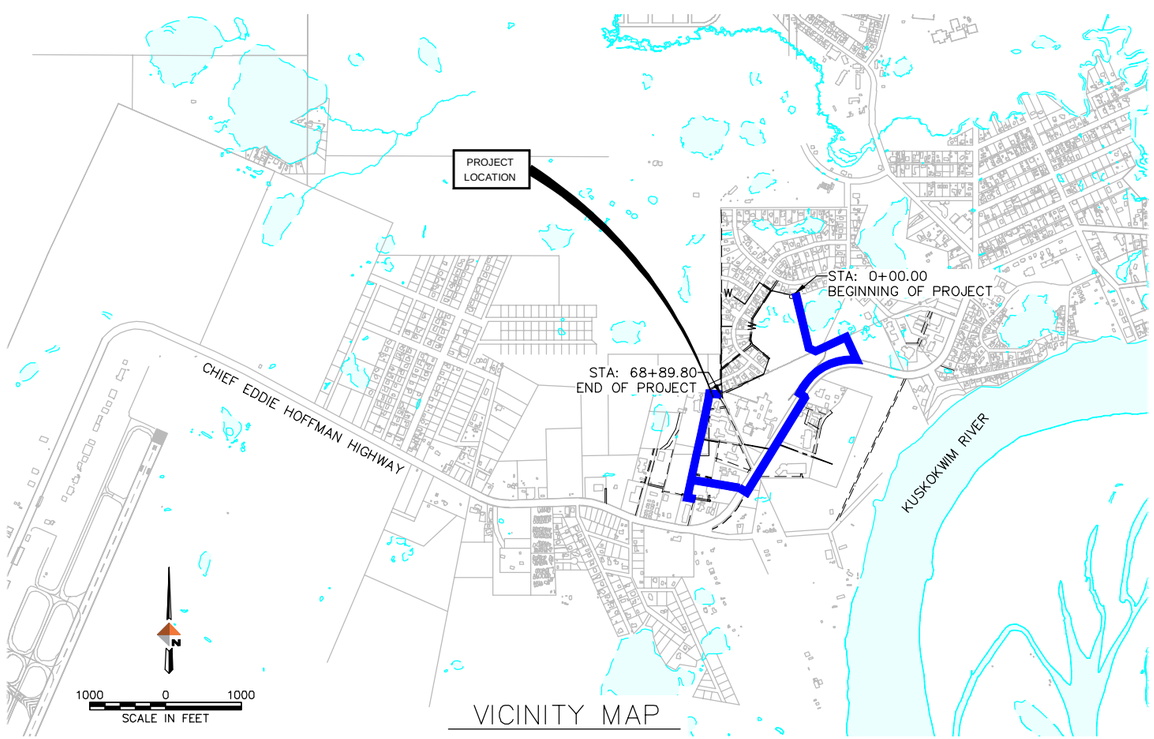

VICINITY MAP

PREPARED FOR:

CITY OF BETHEL
P.O. BOX 1388
BETHEL AK, 99559

PREPARED BY:

DOWL
WWW.DOWL.COM

3535 College Road, Suite 100
Fairbanks, Alaska 99709
907-374-0275

SHEET INDEX

SHEET NO.	TITLE
G1	COVER SHEET
G2	KEY MAP, LEGEND, ABBREVIATIONS & NOTES
G3	WATER SERVICE PLAN
G4–G5	SURVEY CONTROL
C01–C14	PLAN AND PROFILE
D1	PIPE SUPPORT DETAILS
D2	PIPE SERVICE DETAILS
D3	IN–LINE HYDRANT DETAILS
D4	SERVICE UTILITY BOX DETAILS
D5	SERVICE UTILITY BOX DETAILS
D6	ROAD/TRAIL & DRIVEWAY CROSSING DETAILS
D7	END OF LINE HYDRANT DETAILS
D8	WATER SERVICE BOX ASSEMBLY
D9	ADDITIONAL DETAILS
PID1–PID5	PIPING & INSTRUMENTATION DIAGRAMS
ME01–ME02	EXISTING PIPING
M01–M04	PROPOSED PIPING
E1–E6	ELECTRICAL

STATE OF ALASKA 49TH
AARON R. CHRISTIE
CE 10967
10.19.16
REGISTERED PROFESSIONAL ENGINEER

PROJECT	61833
DATE	10/07/2016

SHEET
G1

C:\Civil 3D Projects\23\61833-01\Civil\SA14-CS-CV-61833.dwg PLOT DATE 2016-10-19 17:59 SAVED DATE 2016-10-19 10:35 USER: asetten

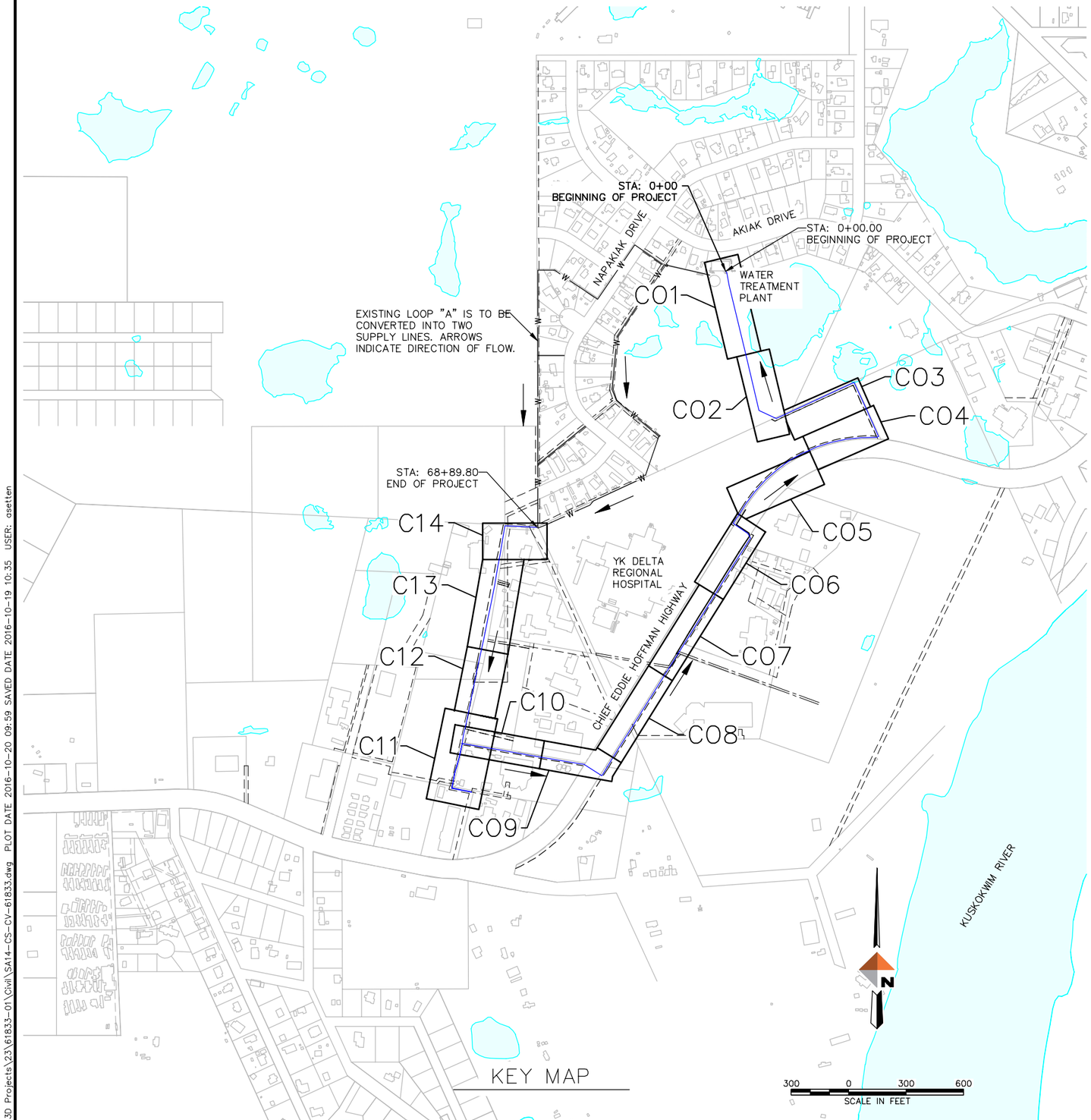

KEY MAP

LEGEND

EXISTING	PROPOSED	
		ASPHALT EDGE
		BUILDING
C		CENTERLINE
		COMMUNICATIONS LINE
		CULVERT / CASING PIPE
		DOT ROW
		EASEMENT
OE		OVERHEAD ELECTRICAL LINE
X X		EXISTING GROUND (PROFILE)
FO		FENCE
		FIBER OPTIC
		FIRE HYDRANT
		GRAVEL EDGE
		LUMINAIRE
		THERMO PILES
20		MAJOR CONTOUR
18		MINOR CONTOUR
		PIPE SUPPORTS
		POWER POLE WITH GUY WIRE
		PROPERTY LINE
S		SANITARY SEWER LINE
		SANITARY SEWER CLEANOUT
		SIGN
		WATER BODY
W	W	WATER LINE

ABBREVIATIONS

AL	ALUMINUM
AIP	ARCTIC INSULATED PIPE
APPROX	APPROXIMATELY
BOP	BOTTOM OF PIPE
CEHH	CHIEF EDDIE HOFFMAN HIGHWAY
CMP	CORRUGATED METAL PIPE
CITY	CITY OF BETHEL
COMM	COMMUNICATION
CY	CUBIC YARD
DI	DUCTILE IRON
DIA	DIAMETER
DTL	DETAIL
EX	EXISTING
FF	FINISHED FLOOR
FT	FEET
GPM	GALLONS PER MINUTE
GA	GAUGE
GHR	GLYCOL HEAT RETURN
GHS	GLYCOL HEAT SUPPLY
HDPE	HIGH DENSITY POLYETHYLENE
HP	HORSEPOWER
IC	INSTITUTIONAL CORRIDOR
IPS	IRON PIPE SIZE
LF	LINEAR FEET
MAX	MAXIMUM
MH	MANHOLE
MIL	MILLIMETER
MIN	MINIMUM
NFS	NON-FROST SUSCEPTIBLE
NO	NUMBER
NTS	NOT TO SCALE
OC	ON CENTER
PE	POLYETHYLENE
PSI	POUNDS PER SQUARE INCH
ROW	RIGHT OF WAY
SHT	SHEET
SIM	SIMILAR
SPECS	SPECIFICATIONS
SS	STAINLESS STEEL
STA	STATION
TYP	TYPICAL
WTP	WATER TREATMENT PLANT

FIRE HYDRANT SCHEDULE:

	STATION
1	19+00
2	22+14
3	25+00
4	26+56
5	29+30
6	32+60
7	35+50
8	39+00
9	42+60
10	46+70

	STATION
11	52+17
12	59+51
13	63+00
14	66+00
15	68+08

ESTIMATE OF QUANTITIES:

PROPOSED UTILITY	PROPOSED ALIGNMENT LENGTH (FT)
WATER MAIN	6,890
TOTAL SERVICES	11
GLYCOL LOOP – MAIN	13,800

PROPOSED UTILITY	PROPOSED ALIGNMENT COUNT
NO. OF STUB OUTS	4
NO. OF FIRE HYDRANTS	15
NO. AIR RELEASE VALVES	8

GENERAL NOTES:

1. HORIZONTAL DIMENSIONS ARE TO PIPE CENTERLINE, UNLESS OTHERWISE NOTED. BOTTOM OF PIPE ELEVATIONS PROVIDED ON THE DRAWINGS ARE TO THE BOTTOM OF THE OUTER JACKET UNLESS OTHERWISE SHOWN.
2. INFORMATION ON EXISTING UTILITIES AND BUILDINGS SHOWN ARE TAKEN FROM EXISTING RECORDS OR ESTIMATED BY OTHER MEANS AND ARE SHOWN FOR THE CONVENIENCE OF THE CONTRACTOR. BOTH LOCATIONS AND DEPTHS TO UTILITIES ARE APPROXIMATE ONLY. THE CONTRACTOR SHALL CONTACT ALL UTILITY OWNERS AND CONFIRM LOCATIONS OF EXISTING UTILITIES.
3. COORDINATES SHOWN ARE APPROXIMATE.
4. COMMUNICATION AND FIBER OPTIC LINES ARE NOT TO BE BELOW FIRE HYDRANT BASES.

GENERAL PIPING NOTES:

1. SIZE OF FITTINGS SHOWN ON PLANS SHALL CORRESPOND TO ADJACENT STRAIGHT RUN OF PIPE, UNLESS OTHERWISE INDICATED. TYPE OF JOINT AND FITTING MATERIAL SHALL BE THE SAME AS SHOWN FOR ADJACENT STRAIGHT RUN OF PIPE.
2. ALL JOINTS SHALL BE WATERTIGHT.
3. WHERE A FLANGED HDPE PIPE IS SHOWN, A STANDARD HDPE ADAPTER FLANGE SHALL BE USED.
4. WHERE CONNECTIONS ARE MADE TO EXISTING PIPING, CONTRACTOR TO VERIFY ALL LOCATIONS AND DIMENSIONS.
5. COORDINATE ALL CONNECTIONS TO EXISTING PIPING SYSTEMS WITH OWNER'S REPRESENTATIVE.
6. WATER MAIN SHALL BE ABOVE FINISHED GROUND, UNLESS IT IS IN A CULVERT OR SPECIFICALLY DESIGNATED AS DIRECT BURY.
7. GRADE THE EXISTING GROUND OR ADJUST PIPE ALIGNMENT TO ACCOMMODATE PIPE GRADE AS SHOWN ON THE DRAWINGS. CONTRACTOR IS TO COORDINATE EXCESS MATERIAL DISPOSAL AT LANDFILL WITH CITY.

STATE OF ALASKA 49TH
AARON R. CHRISTIE
CE 10967
10-19-16
REGISTERED PROFESSIONAL ENGINEER

BETHEL ALASKA

DOWL
AECL848
www.dowl.com
3535 College Road, #100
Fairbanks, Alaska 99709
907-374-0275

INSTITUTIONAL CORRIDOR PIPED WATER SYSTEM
BETHEL, ALASKA

KEY MAP, LEGEND, ABBREVIATIONS & NOTES

PROJECT 1123.62833.01
DATE 10/18/2016

© DOWL 2016

SHEET
G2

C:\Civil 3D Projects\23\61833-01\Civil\SA14-CS-CV-61833.dwg PLOT DATE 2016-10-20 09:59 SAVED DATE 2016-10-19 10:35 USER: asetten

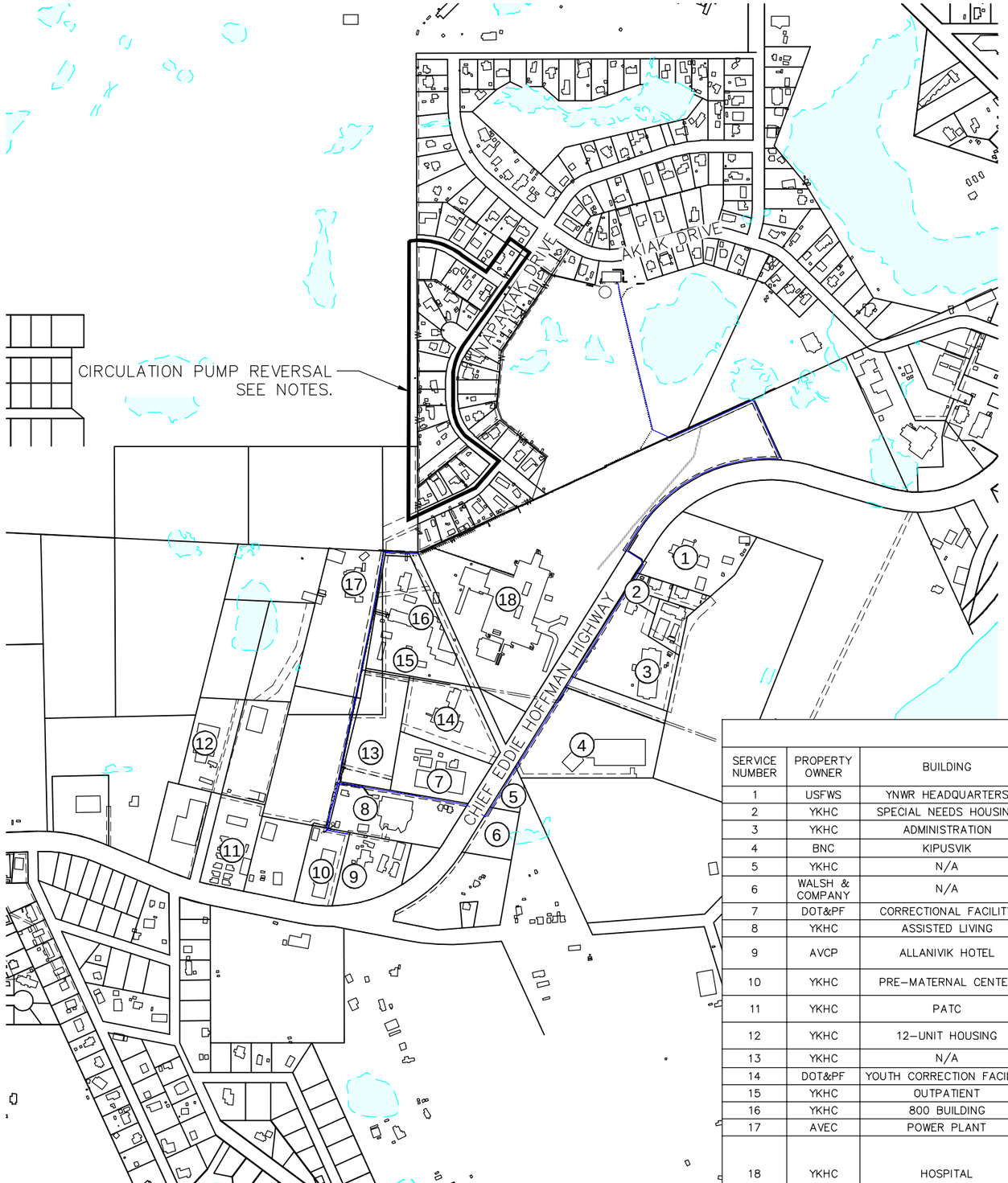

SERVICE LINE NOTES:

1. CONTRACTOR IS TO WORK WITH RESPECTIVE OWNERS ON INSTALLATION OF WATER SERVICES. THE TABLE INDICATES THE APPROXIMATE LENGTH, THE MAINLINE STATIONING WHERE THE SERVICE IS TO BEGIN, AND THE TYPE OF SERVICE. CONTRACTOR SHALL FURNISH PLAN FOR SERVICE INSTALLATION FOR ENGINEER AND OWNER APPROVAL BEFORE COMMENCING CONSTRUCTION, THEN TEMPORARY CONSTRUCTION PERMITS FOR ALL SERVICES WILL BE OBTAINED BY ENGINEER AFTER OBTAINING CONTRACTOR'S SERVICE INSTALLATION PLAN.

CIRCULATION PUMP REVERSAL NOTES:

1. CONTRACTOR IS TO WORK WITH PROPERTY OWNERS IDENTIFIED IN THE KEY MAP. THE SERVICE CIRCULATION PUMPS SHALL BE REVERSED. THIS SHALL BE DONE BY MAKING NECESSARY MODIFICATIONS TO THE PLUMBING TO REVERSE THE DIRECTION OF FLOW. THE STANDARD CIRCULATION PUMP ORIENTATION IS SHOWN IN DETAIL 1/G3.
2. CONTRACTOR ALSO HAS THE OPTION OF SWITCHING THE SUPPLY AND RETURN LINES AT THE WATER MAIN.

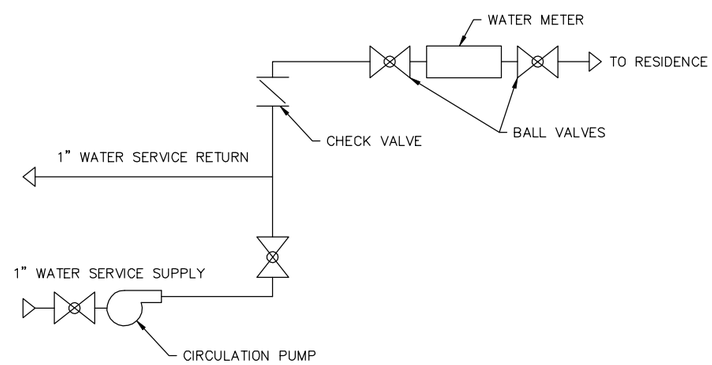

1 / G3 CIRCULATION PUMP
NTS

SERVICE NUMBER	PROPERTY OWNER	BUILDING	TYPE OF SERVICE	APPR. LENGTH OF SERVICE	SIZE OF SERVICE	STA. OF SERVICE CONNECTION TO MAIN	BUILDING SERVICED BY EXISTING CITY SEWER SERVICE?
1	USFWS	YNWR HEADQUARTERS	TIE INTO BUILDING	195 LF	1" SUPPLY AND RETURN	26+65	YES
2	YKHC	SPECIAL NEEDS HOUSING	TIE INTO BUILDING	40 LF	1" SUPPLY AND RETURN	28+05	YES
3	YKHC	ADMINISTRATION	SERVICE FROM HOSPITAL	N/A	N/A	N/A	YES
4	BNC	KIPUSVIK	STUB-OUT	N/A	1" SUPPLY AND RETURN	35+90	NO
5	YKHC	N/A	STUB-OUT	N/A	1" SUPPLY AND RETURN	39+72	N/A
6	WALSH & COMPANY	N/A	STUB-OUT	N/A	1" SUPPLY AND RETURN	41+18	N/A
7	DOT&PF	CORRECTIONAL FACILITY	TIE INTO BUILDING	70 LF	2" SUPPLY AND 1" RETURN	45+34	YES
8	YKHC	ASSISTED LIVING	TIE INTO BUILDING	30 LF	1" SUPPLY AND RETURN	46+37	YES
9	AVCP	ALLANIVIK HOTEL	TIE INTO BUILDING (AT WATER TREATMENT BUILDING)	280 LF	1" SUPPLY AND RETURN	52+09	YES
10	YKHC	PRE-MATERNAL CENTER	TRANSITION EXISTING SERVICE LINES TO NEW MAIN	N/A	1" SUPPLY AND RETURN	53+60	YES
11	YKHC	PATC	TRANSITION EXISTING SERVICE LINES TO NEW MAIN	N/A	N/A	53+60	YES
12	YKHC	12-UNIT HOUSING	TRANSITION EXISTING SERVICE LINES TO NEW MAIN	N/A	N/A	53+60	YES
13	YKHC	N/A	STUB-OUT	N/A	1" SUPPLY AND RETURN	58+64	N/A
14	DOT&PF	YOUTH CORRECTION FACILITY	TIE INTO BUILDING	490 LF	2" SUPPLY AND 1" RETURN	61+25	YES
15	YKHC	OUTPATIENT	TIE INTO BUILDING	260 LF	1" SUPPLY AND RETURN	61+25	YES
16	YKHC	800 BUILDING	TIE INTO BUILDING	260 LF	1" SUPPLY AND RETURN	64+23	YES
17	AVEC	POWER PLANT	TIE INTO BUILDING	100 LF	1" SUPPLY AND RETURN	64+60	YES
18	YKHC	HOSPITAL	TIE INTO NORTHERN WELL HOUSE BUILDING WITH BLACKFLOW PREVENTERS AND CHECK VALVES. YKHC SHALL HAVE THE OPTION OF USING WELL WATER OR CITY WATER	450 LF	4" SUPPLY AND 1" RETURN	68+68	YES

STATE OF ALASKA 49TH
AARON R. CHRISTIE
CE 10967
10-19-16
REGISTERED PROFESSIONAL ENGINEER

BETHEL ALASKA

DOWL
AECL848
WWW.DOWL.COM
3535 College Road, #100
Fairbanks, Alaska 99709
907-374-0275

INSTITUTIONAL CORRIDOR PIPED WATER SYSTEM
BETHEL, ALASKA
WATER SERVICE PLAN

PROJECT 1123.62833.01
DATE 10/18/2016

© DOWL 2016

SHEET
G3

C:\Civil 3D Projects\23\61833-01\Civil\SA14-CS-CV-61833.dwg PLOT DATE 2016-10-19 17:54 SAVED DATE 2016-10-19 10:35 USER: asetten

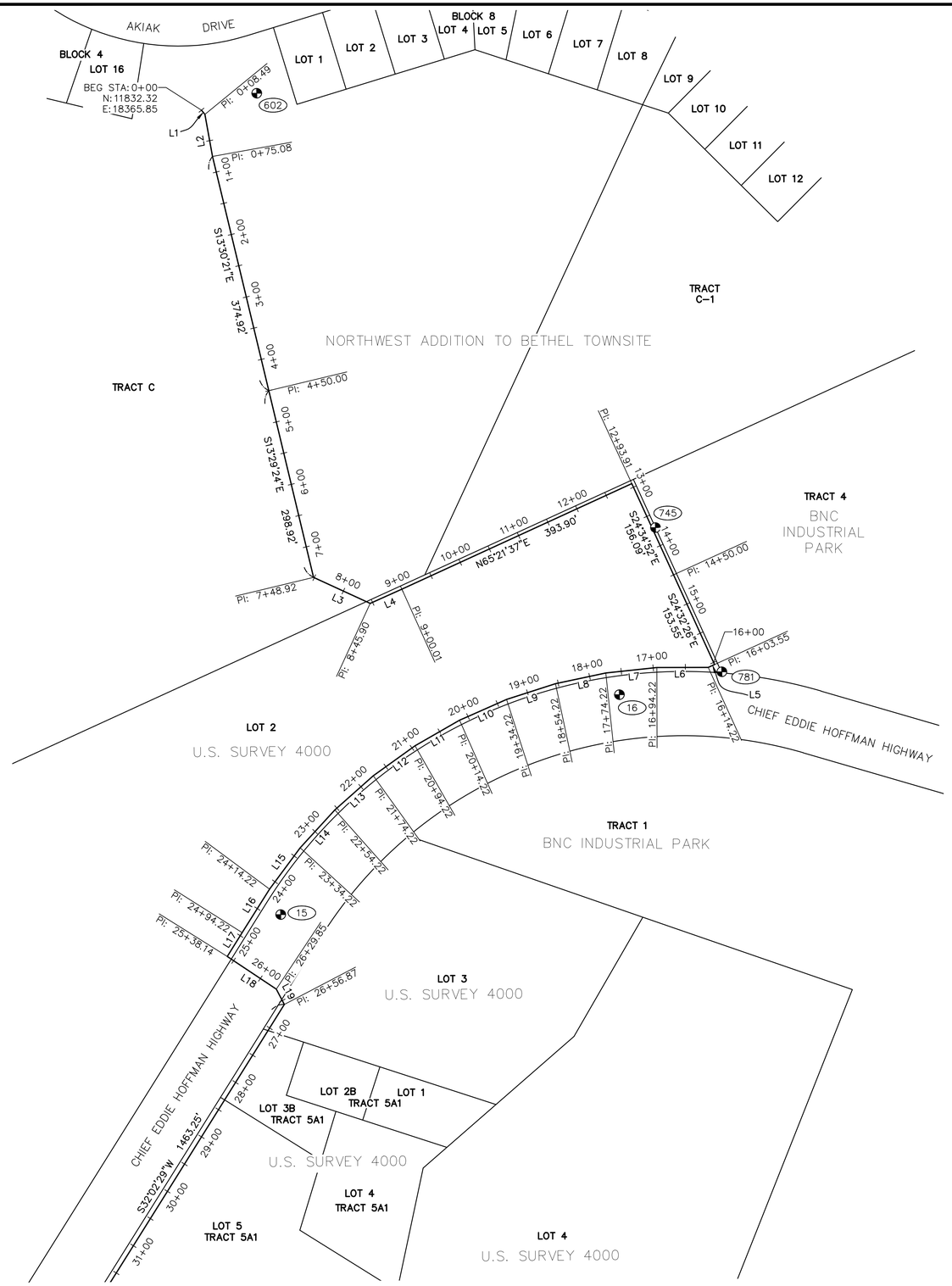

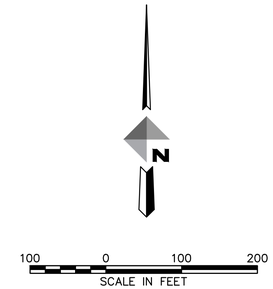

LEGEND

- SURVEY MONUMENT
- (901) CONTROL POINT NUMBER
- PROPERTY LINE
- 10+00 ALIGNMENT W/STATIONING

LINE TABLE		
LINE #	BEARING	DISTANCE
L1	S39°17'27"E	8.49
L2	S10°13'54"E	66.59
L3	S65°15'30"E	96.98
L4	N65°40'41"E	54.11
L5	S65°29'55"W	10.67
L6	S89°51'15"W	80.00
L7	S83°55'37"W	80.00
L8	S78°00'00"W	80.00
L9	S72°04'23"W	80.00
L10	S66°08'46"W	80.00
L11	S60°13'08"W	80.00
L12	S54°17'31"W	80.00
L13	S48°21'54"W	80.00
L14	S42°26'17"W	80.00
L15	S36°30'40"W	80.00
L16	S32°13'58"W	80.00
L17	S32°02'29"W	43.92
L18	S56°25'27"E	91.72
L19	S27°37'52"E	27.01

NOTES:

1. The information shown hereon is based on a field survey performed by DOWL from January 2015 through February 2015. Background information depicted is shown for orientation purposes only and should not be used for any other purpose.

2. This survey was performed to check and update survey control, and provide design level topographic and feature mapping for the Bethel Institutional Corridor Piped Water System.

3. All dimensions and coordinates shown are in U.S. Survey Feet unless otherwise noted.

4. It is the Contractor's responsibility to work around all monuments without disturbing the monument or case.

5. All monument cases shall have a sufficient permanent riser added so the top of the monument case matches the finished grade.

6. Whether listed or not, ALL monuments or property markers, corners, or accessories, which will be disturbed or buried, shall be referenced and re-established in their original position (A.S. 19.10.260) and recorded (A.S. 34.65.0440)

SURVEY CONTROL NOTES

HORIZONTAL CONTROL
The Bethel Water Line Coordinate System is a local surface grid coordinate system in US Survey Feet that is constrained to Alaska State Plane Coordinates (ASPC), Zone 7, NAD83(NSRS2007).

BASIS OF COORDINATES:
The Basis of Coordinates for this local coordinate system is the published coordinates for National Geodetic Survey (NGS) Station "BET C"(PID DF3624), a brass disk stamped "BET C 2001".

BASIS OF BEARINGS:
The Basis of Bearings is a local plane bearing between NGS Station BET C and NGS Station BET B. NGS Station BET B bears S 25°43'20.9"W a distance of 2672.852 feet from NGS Station BET C. NGS Station BET B has Bethel coordinates of 6,266.8084 N, 7,694.8219 E. U.S. Survey Feet.

CONVERSION INSTRUCTIONS:
Conversion from Local US Feet to Alaska State Plane, Zone 7, NAD83(NSRS2007) US Feet:

1. Rotate Coordinates COUNTER-CLOCKWISE 00°08'57.9714" about point 0, 0.
2. Translate resulting Coordinates using +2,470,046.94556 N +1,661,076.82938 E.
3. Scale State Plane Coordinates using 0.99992579 (BASE POINT 0,0).

VERTICAL CONTROL
Elevations are Local Mean Tide Level, as listed on the Record of Survey for Chief Eddie Hoffman Highway, recorded as plat 2005-16, Bethel Recording District, State of Alaska. This Elevation is stated to have been determined by ADOT&PF, and varies from the published NOAA elevation for station 9466477 BM No. 6 VM#19662.

TBM-602 is the most northerly nut on the top flange of a fire hydrant appriximately 40 feet east of the water treatment plant, having an elevation of 33.16 feet.

SURVEY CONTROL POINTS

POINT	STATION	OFFSET	NORTHING	EASTING	ELEVATION	DESCRIPTION
602	10+16.50	795.91' L	11858.0	18451.0	33.16	FH NUT
745	13+71.41	4.97' L	11182.50	19072.53		BRASS CAP
16	17+56.78	35.86' L	10922.38	19016.34	42.14	ALMON
15	24+38.54	35.70' L	10580.05	18489.14	49.51	ALMON
781			10958.03	19175.87		REBAR

STATE OF ALASKA 49TH A. WILLIAM STOLL LS 12041 REGISTERED PROFESSIONAL LAND SURVEYOR

DOWL
WWW.DOWL.COM
3535 College Road, #100
Fairbanks, Alaska 99709
907-374-0275
AECL848

INSTITUTIONAL CORRIDOR PIPED WATER SYSTEM
BETHEL, ALASKA
SURVEY CONTROL

PROJECT 1123.62833.01
DATE 10/18/2016

© DOWL, 2016

SHEET
G4

C:\Civil 3D Projects\23\61833-01\Survey\SC14-SC-VC-61833.dwg PLOT DATE 2016-10-18 10:52 SAVED DATE 2016-10-18 10:50 USER: vbojko

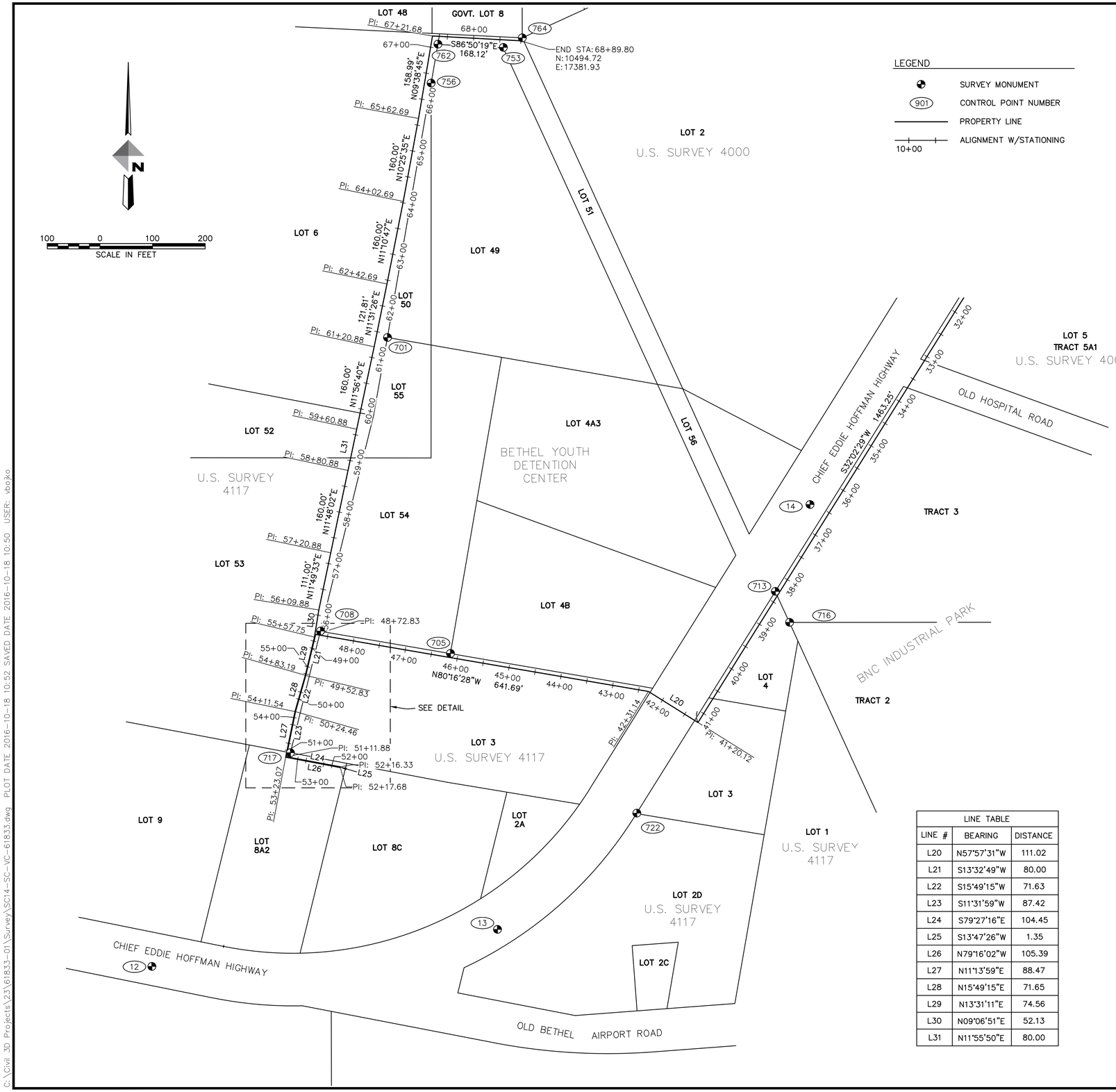

LEGEND

- SURVEY MONUMENT
- (901) CONTROL POINT NUMBER
- PROPERTY LINE
- 10+00 ALIGNMENT W/STATIONING

SURVEY CONTROL POINTS

POINT	STATION	OFFSET	NORTHING	EASTING	ELEVATION	DESCRIPTION
14	36+56.12	39.24' R	9613.90	17931.49	31.57	ALMON
713	38+31.01	7.53' R	9448.83	17865.58		ALCAP
716	38+66.50	46.56' L	9390.04	17892.58		ALCAP
722	41+27.38	207.61' L	9027.63	17602.28		REBAR
13	44+37.63	493.90' L	8806.74	17337.51	49.47	ALMON
705	46+14.28	7.85' R	9331.12	17248.16		ALCAP
708	48+64.92	7.93' R	9373.53	17001.14		REBAR/YPC
717	51+02.84	6.15' L	9142.34	16944.09		REBAR
701	61+43.24	21.28' R	9931.23	17128.43		REBAR
756	66+32.98	12.35' R	10414.48	17211.37		ALCAP
762	67+08.03	12.72' R	10488.40	17224.31		REBAR
753	68+57.35	14.32' R	10482.21	17348.73		REBAR
12			8736.41	16680.63	58.42	ALMON
764			10500.42	17384.62		BRASS CAP

DETAIL SCALE: 1"=20'

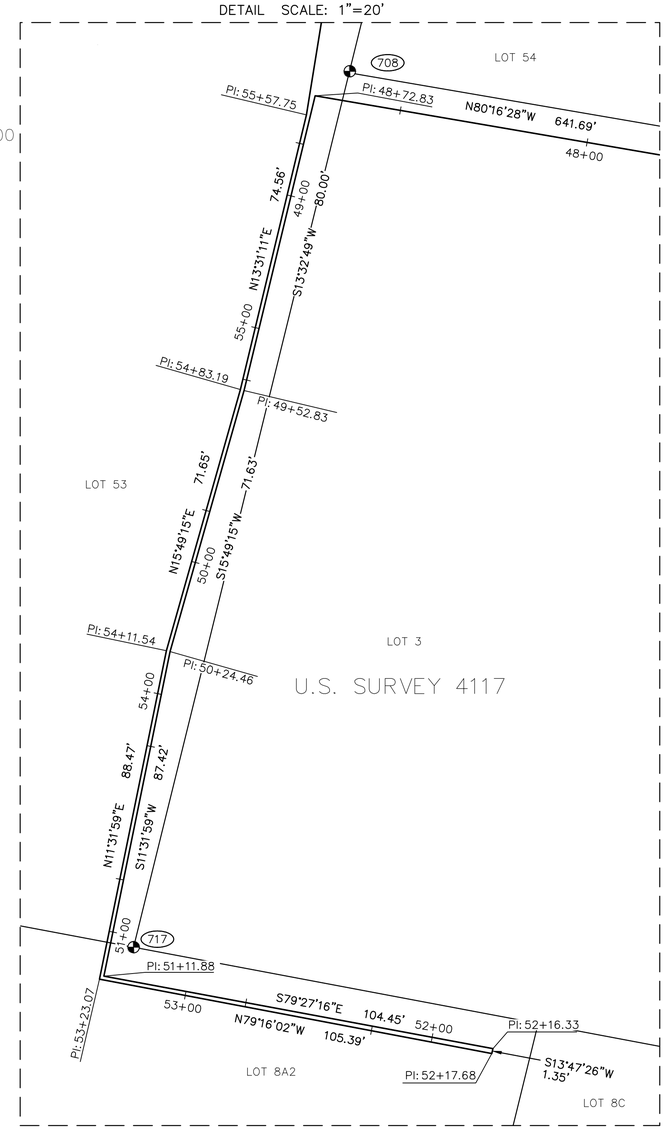

LINE TABLE

LINE #	BEARING	DISTANCE
L20	N57°57'31"W	111.02
L21	S13°32'49"W	80.00
L22	S15°49'15"W	71.63
L23	S11°31'59"W	87.42
L24	S79°27'16"E	104.45
L25	S13°47'26"W	1.35
L26	N79°16'02"W	105.39
L27	N11°13'59"E	88.47
L28	N15°49'15"E	71.65
L29	N13°31'11"E	74.56
L30	N09°06'51"E	52.13
L31	N11°55'50"E	80.00

STATE OF ALASKA 49TH A. WILLIAM STOLL LS 12041 REGISTERED PROFESSIONAL LAND SURVEYOR

DOWL
WWW.DOWL.COM
3535 College Road, #100
Fairbanks, Alaska 99709
907-374-0275
AECL848

INSTITUTIONAL CORRIDOR PIPED WATER SYSTEM
BETHEL, ALASKA
SURVEY CONTROL

PROJECT 1123.62833.01
DATE 10/18/2016

© DOWL 2016

SHEET
G5

C:\Civil 3D Projects\23\61833-01\Survey\SC14-SC-VC-61833.dwg PLOT DATE 2016-10-18 10:52 SAVED DATE 2016-10-18 10:50 USER: vbojko

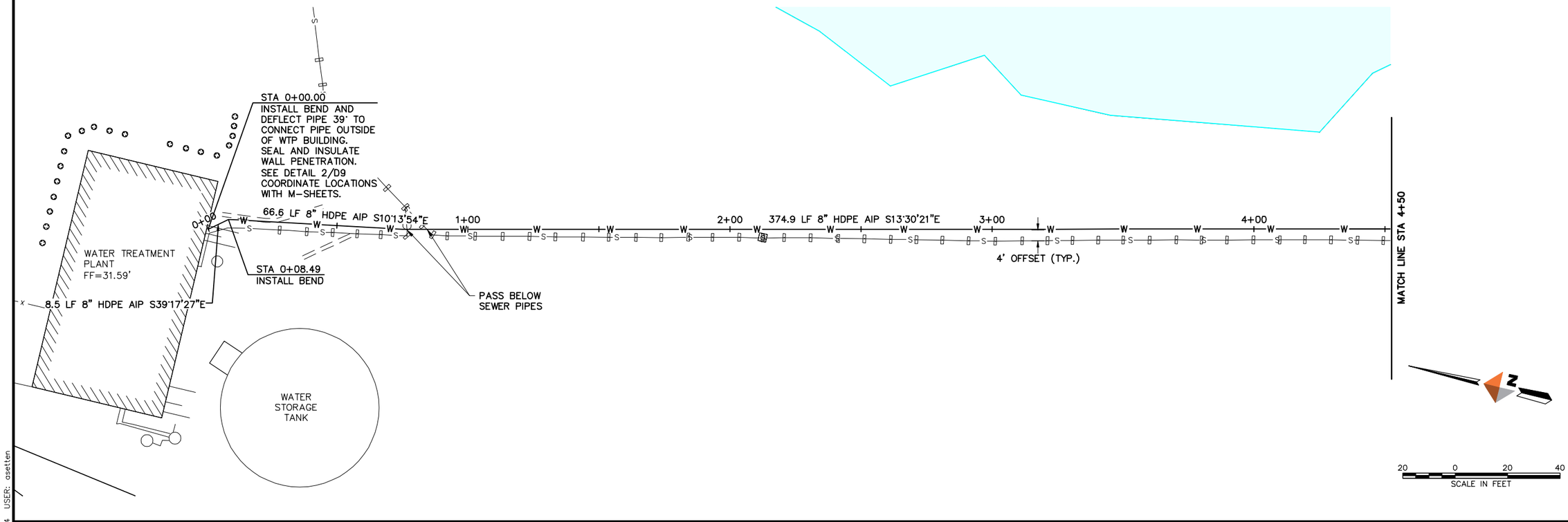

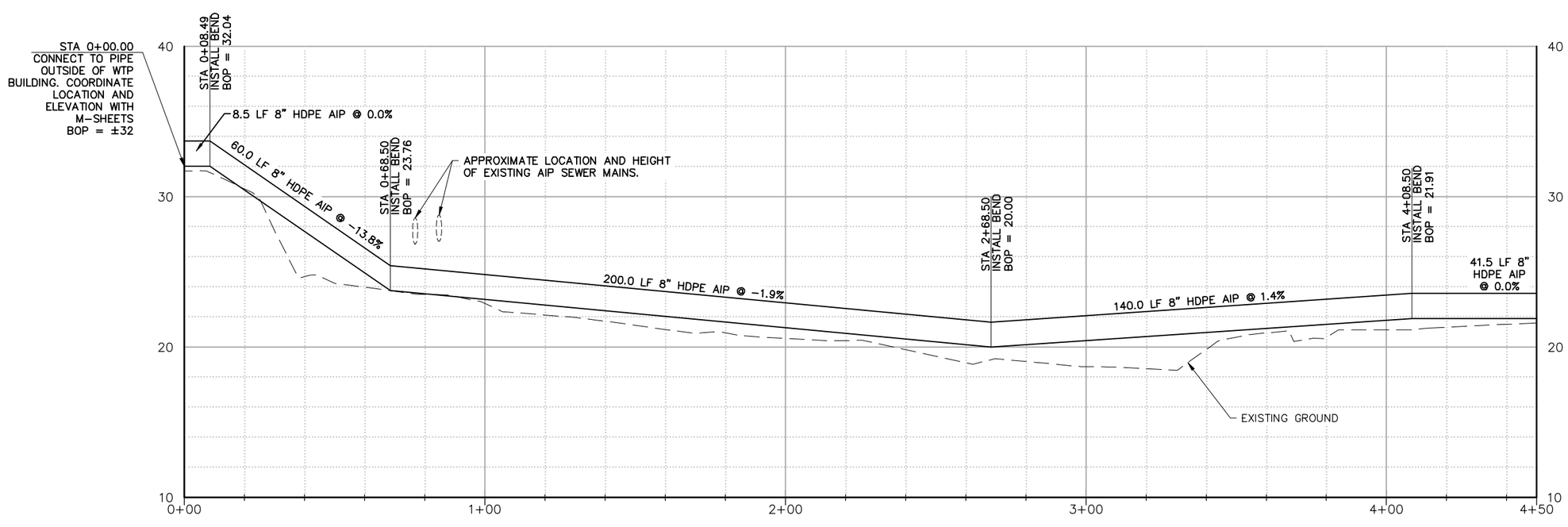

STATE OF ALASKA
49TH
AARON R. CHRISTIE
CE 10967
10-19-16
REGISTERED PROFESSIONAL ENGINEER

BETHEL ALASKA

DOWL
WWW.DOWL.COM
3535 College Road, #100
Fairbanks, Alaska 99709
907-374-0275
AECL848

INSTITUTIONAL CORRIDOR PIPED WATER SYSTEM
BETHEL, ALASKA

PLAN AND PROFILE

PROJECT 1123.62833.01
DATE 10/18/2016

© DOWL 2016

SHEET
C01

C:\Civil 3D Projects\23\61833-01\Civil\SC14-CS-PP-61833.dwg PLOT DATE 2016-10-19 17:56 SAVED DATE 2016-10-19 17:24 USER: asetten

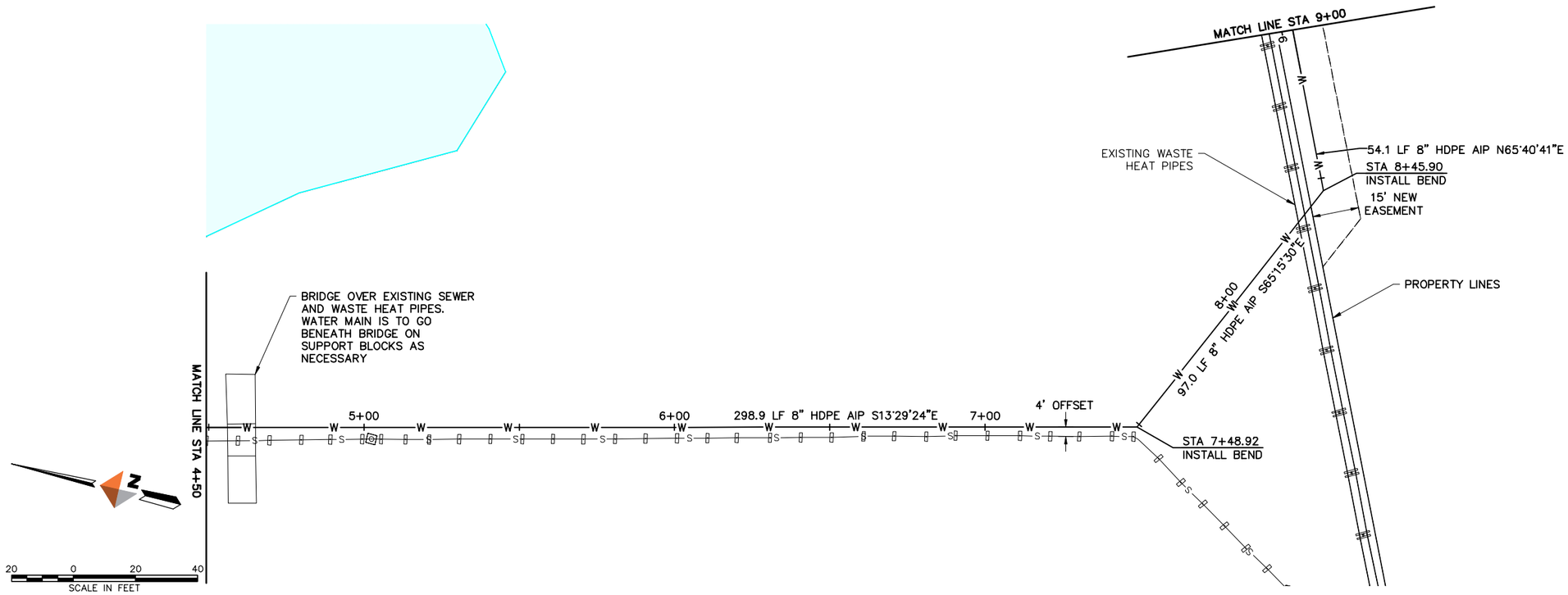

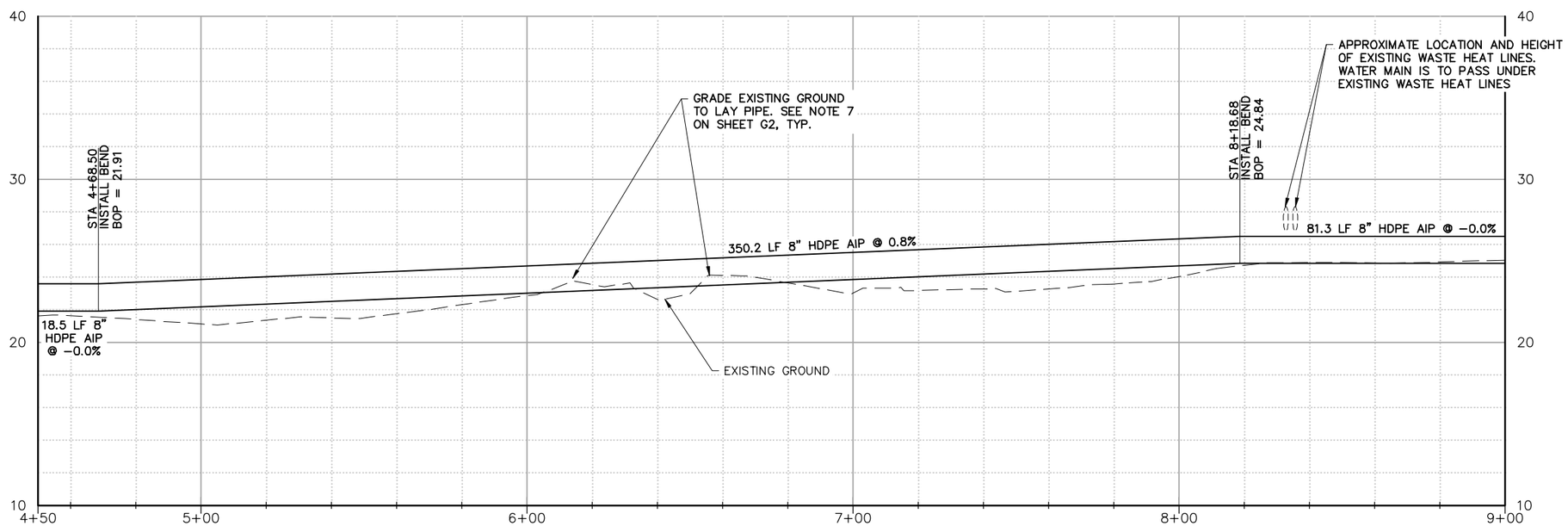

STATE OF ALASKA
49TH
AARON R. CHRISTIE
CE 10967
10-19-16
REGISTERED PROFESSIONAL ENGINEER

BETHEL ALASKA

DOWL
AECL848
WWW.DOWL.COM
3535 College Road, #100
Fairbanks, Alaska 99709
907-374-0275

INSTITUTIONAL CORRIDOR PIPED WATER SYSTEM
BETHEL, ALASKA

PLAN AND PROFILE

PROJECT 1123.62833.01
DATE 10/18/2016

© DOWL 2016

SHEET
C02

C:\Civil 3D Projects\23\61833-01\Civil\SC14-CS-PP-61833.dwg PLOT DATE 2016-10-19 17:56 SAVED DATE 2016-10-19 17:24 USER: asetten

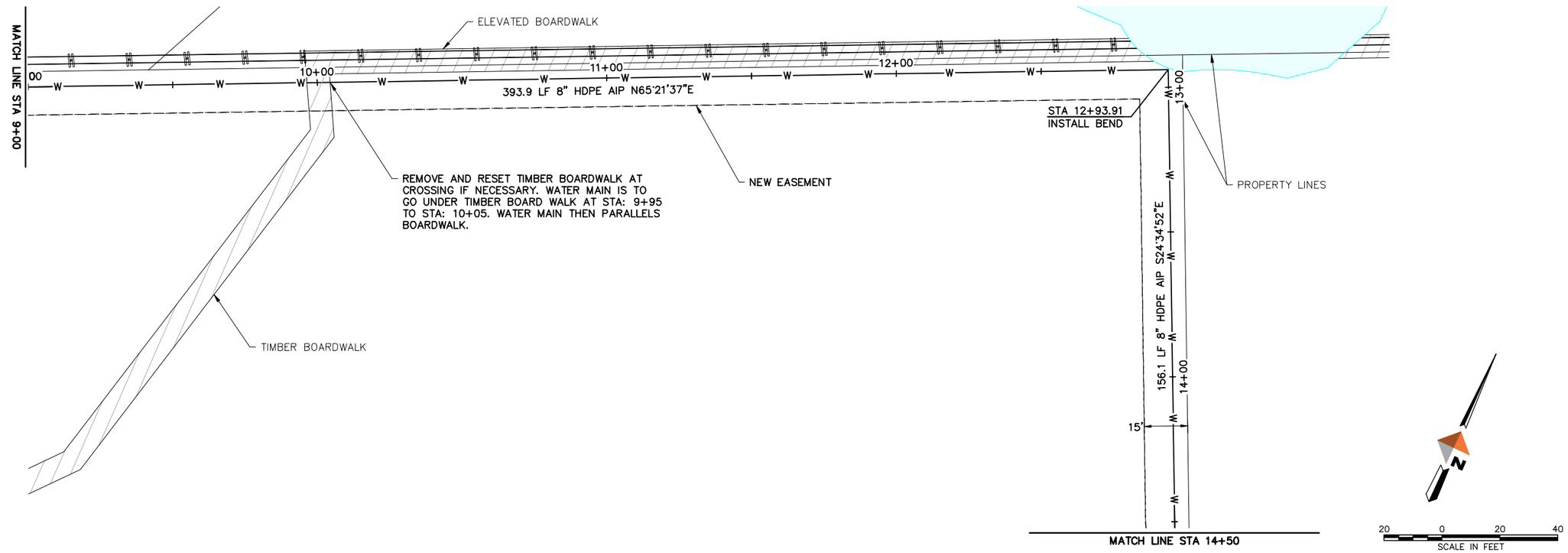

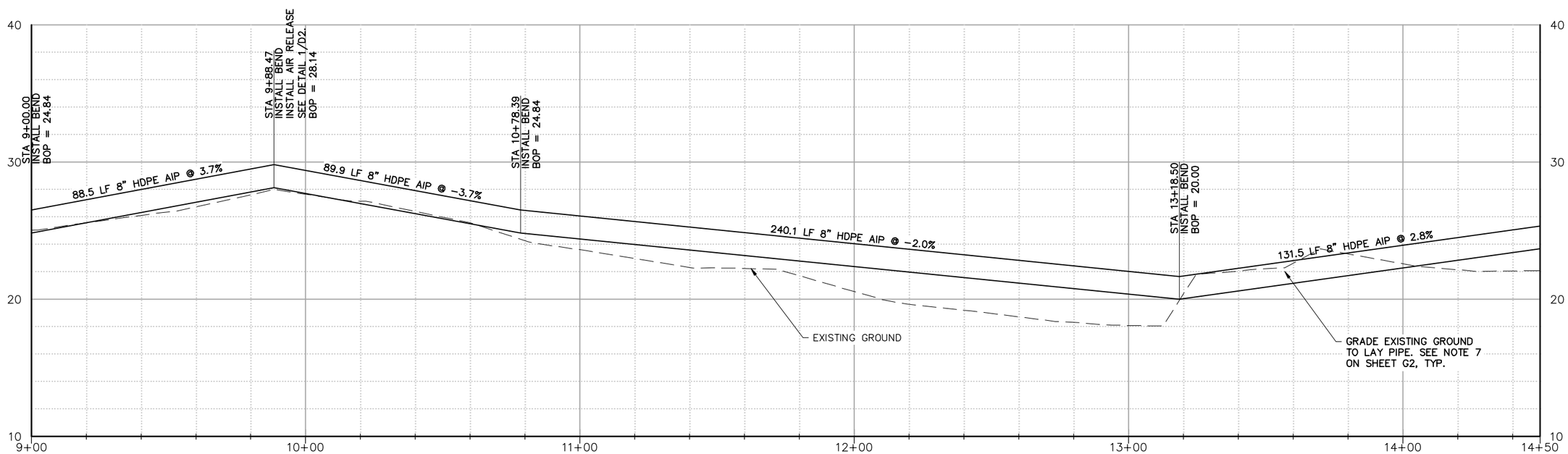

STATE OF ALASKA
49TH
AARON R. CHRISTIE
CE 10967
10-19-16
REGISTERED PROFESSIONAL ENGINEER

BETHEL ALASKA

DOWL
AECL848
WWW.DOWL.COM
3535 College Road, #100
Fairbanks, Alaska 99709
907-374-0275

INSTITUTIONAL CORRIDOR PIPED WATER SYSTEM
BETHEL, ALASKA

PLAN AND PROFILE

PROJECT 1123.62833.01
DATE 10/18/2016

© DOWL 2016

SHEET
C03

C:\Civil 3D Projects\23\61833-01\Civil\SC14-CS-PP-61833.dwg PLOT DATE 2016-10-19 17:56 SAVED DATE 2016-10-19 17:24 USER: asetten

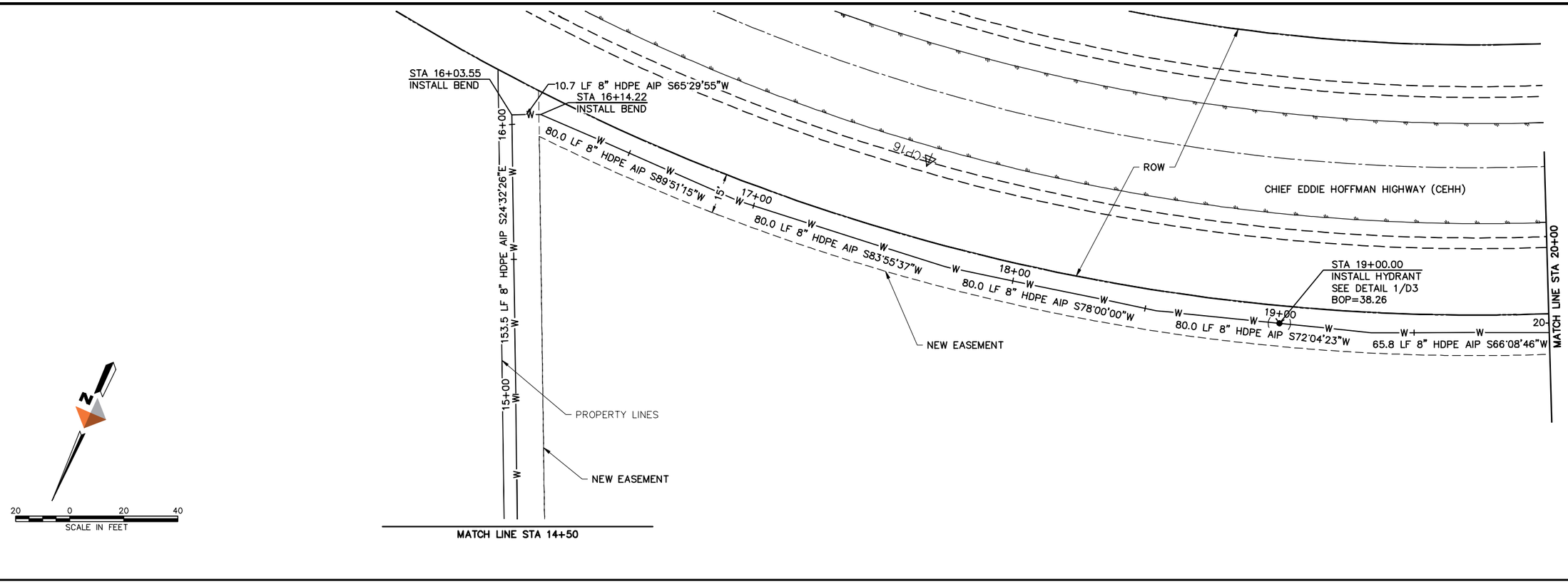

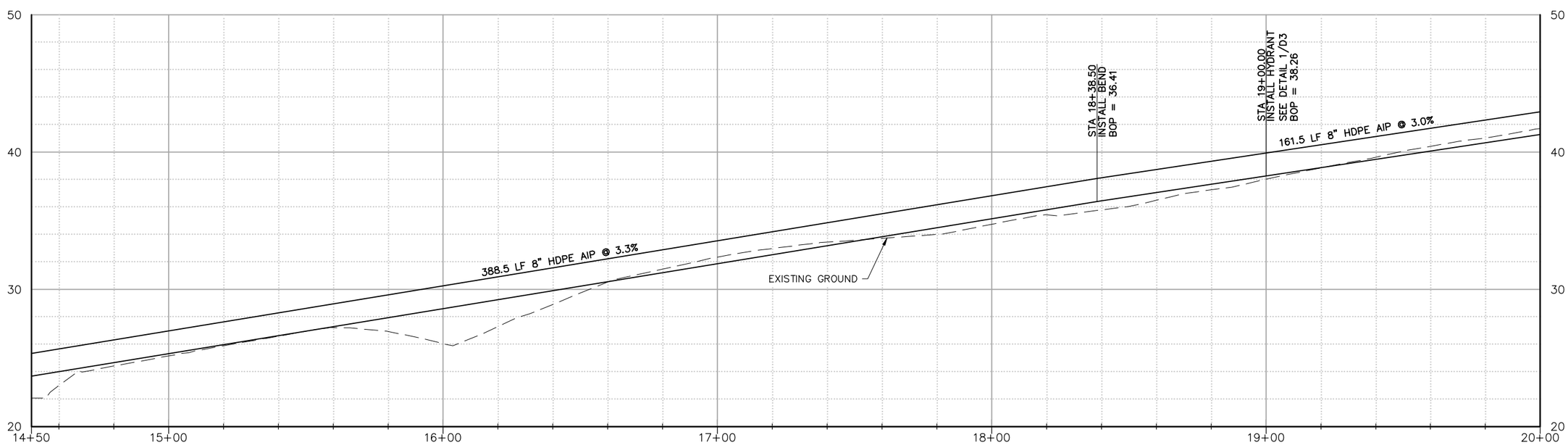

STATE OF ALASKA
49TH
AARON R. CHRISTIE
CE 10967
10.19.16
REGISTERED PROFESSIONAL ENGINEER

BETHEL ALASKA

DOWL
AECL848
WWW.DOWL.COM
3535 College Road, #100
Fairbanks, Alaska 99709
907-374-0275

INSTITUTIONAL CORRIDOR PIPED WATER SYSTEM
BETHEL, ALASKA
PLAN AND PROFILE

PROJECT 1123.62833.01
DATE 10/18/2016

© DOWL 2016

SHEET
C04

C:\Civil 3D Projects\23\61833-01\Civil\SC14-CS-PP-61833.dwg PLOT DATE 2016-10-19 17:56 SAVED DATE 2016-10-19 17:24 USER: asetten

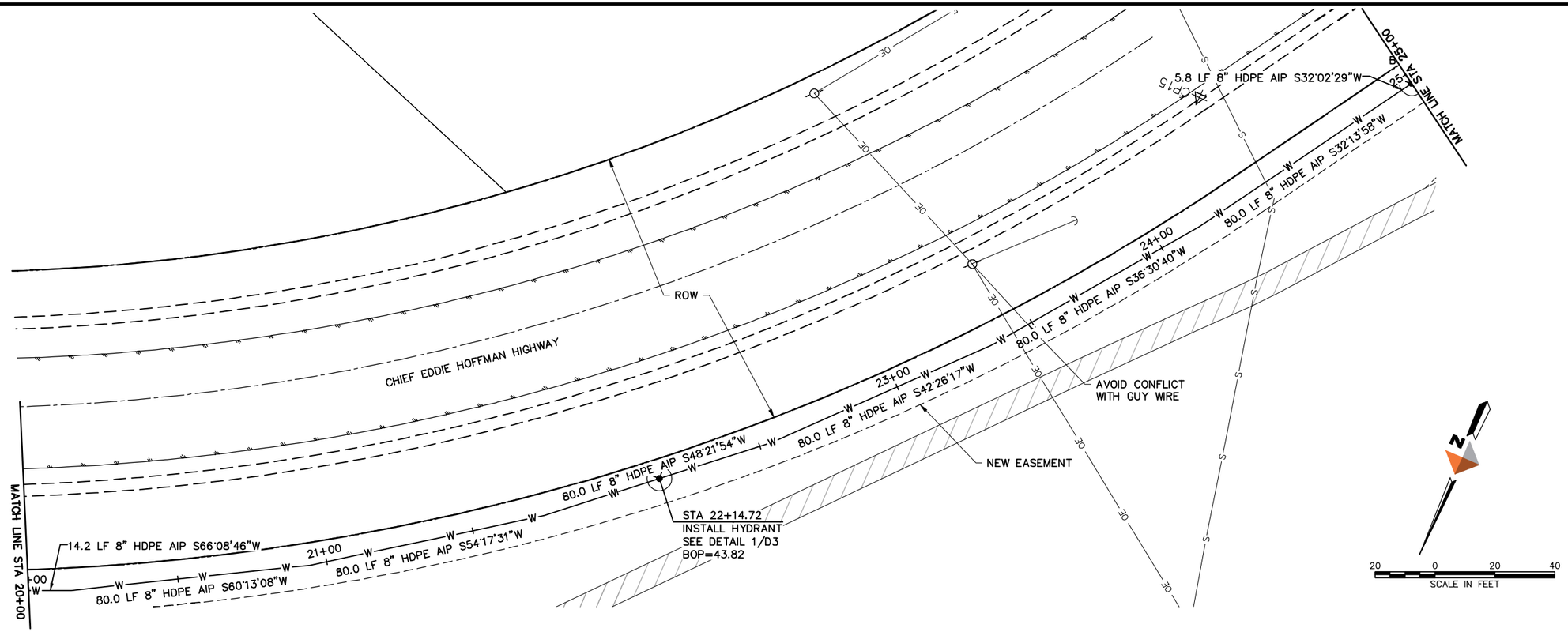

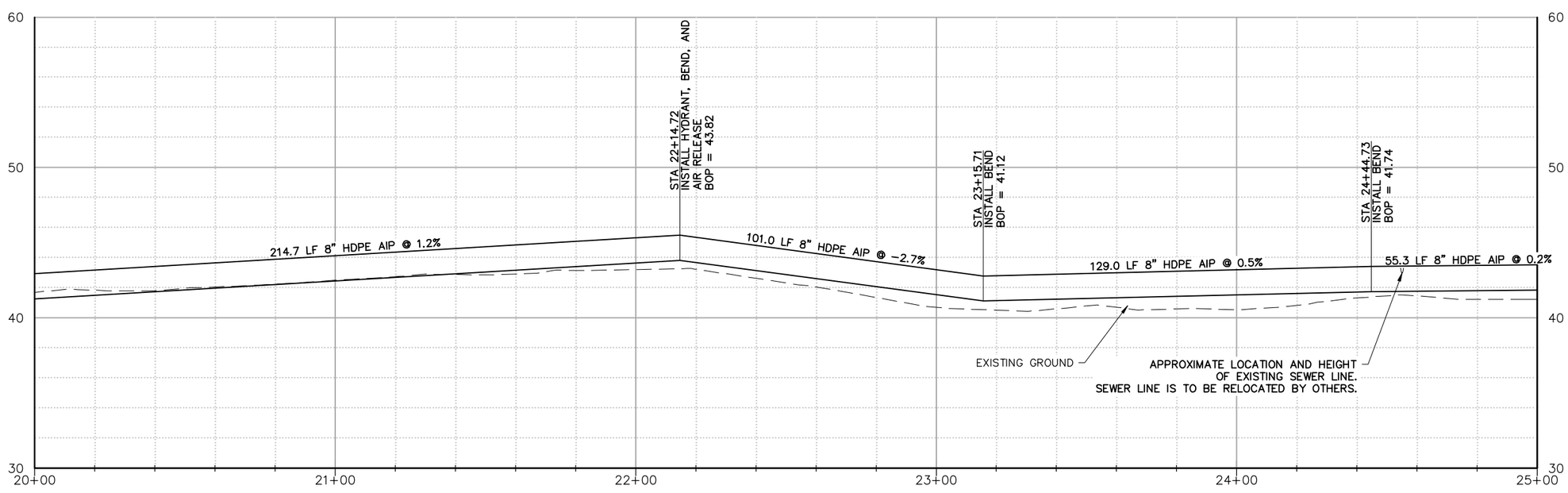

STATE OF ALASKA
49TH
AARON R. CHRISTIE
CE 10967
10-19-16
REGISTERED PROFESSIONAL ENGINEER

BETHEL ALASKA

DOWL
WWW.DOWL.COM
3535 College Road, #100
Fairbanks, Alaska 99709
907-374-0275
AECL848

INSTITUTIONAL CORRIDOR PIPED WATER SYSTEM
BETHEL, ALASKA

PLAN AND PROFILE

PROJECT 1123.62833.01
DATE 10/18/2016

© DOWL 2016

SHEET
C05

C:\Civil 3D Projects\23\61833-01\Civil\SC14-CS-PP-61833.dwg PLOT DATE 2016-10-19 17:56 SAVED DATE 2016-10-19 17:24 USER: asetten

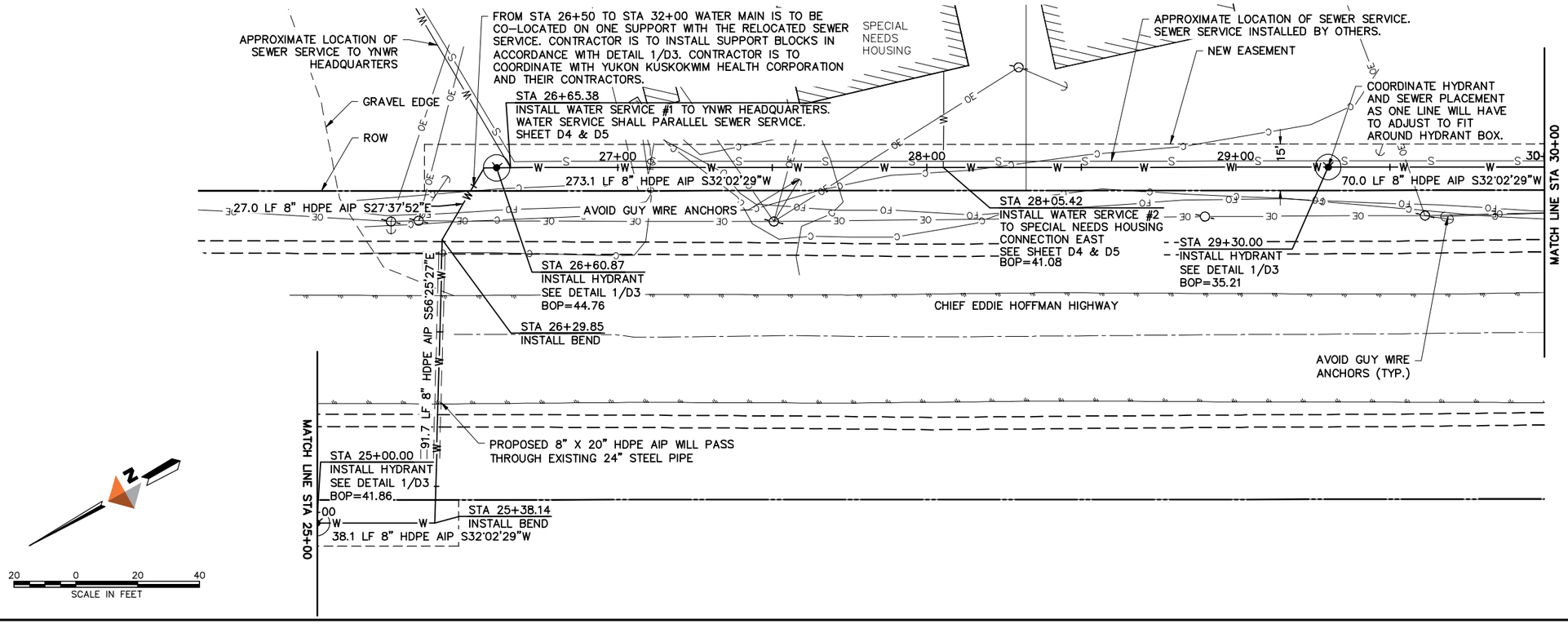

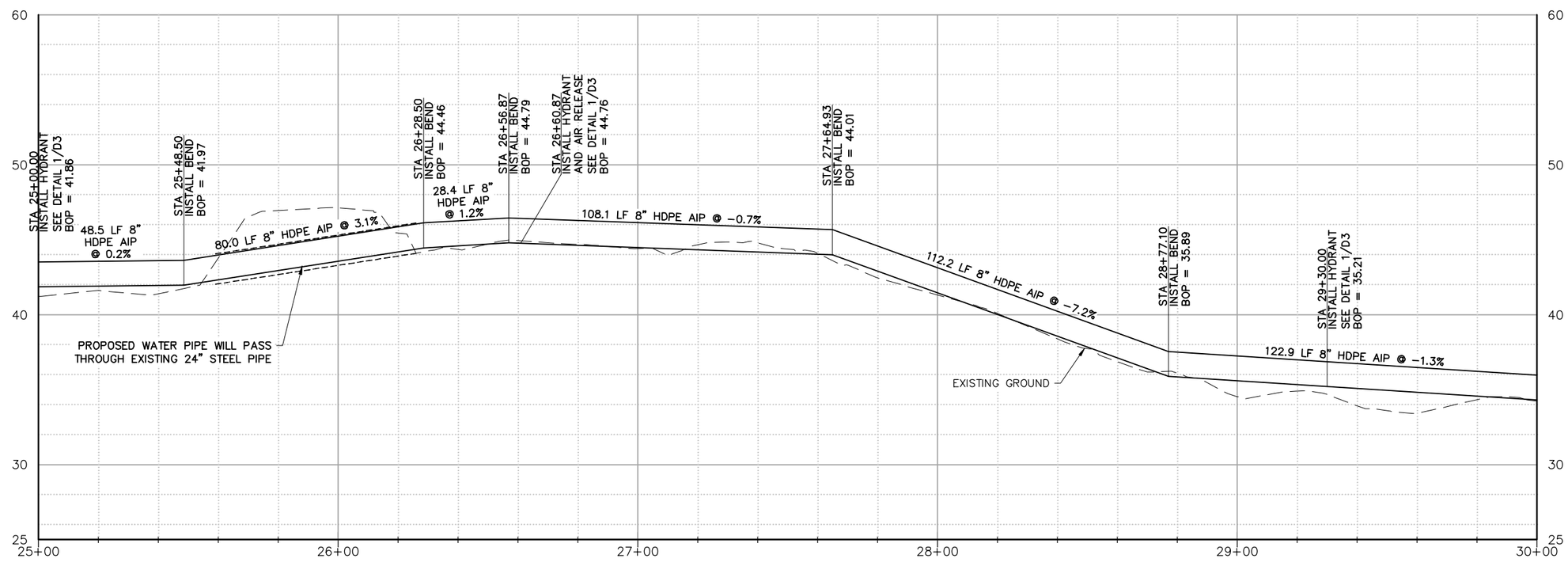

STATE OF ALASKA
49TH
AARON R. CHRISTIE
CE 10967
10-19-16
REGISTERED PROFESSIONAL ENGINEER

BETHEL ALASKA

DOWL
AECI.848
WWW.DOWL.COM
3535 College Road, #100
Fairbanks, Alaska 99709
907-374-0275

INSTITUTIONAL CORRIDOR PIPED WATER SYSTEM
BETHEL, ALASKA
PLAN AND PROFILE

PROJECT 1123.62833.01
DATE 10/18/2016

© DOWL 2016

SHEET
C06

C:\Civil 3D Projects\23\61833-01\Civil\SC14-CS-PP-61833.dwg PLOT DATE 2016-10-19 17:56 SAVED DATE 2016-10-19 17:24 USER: asetten

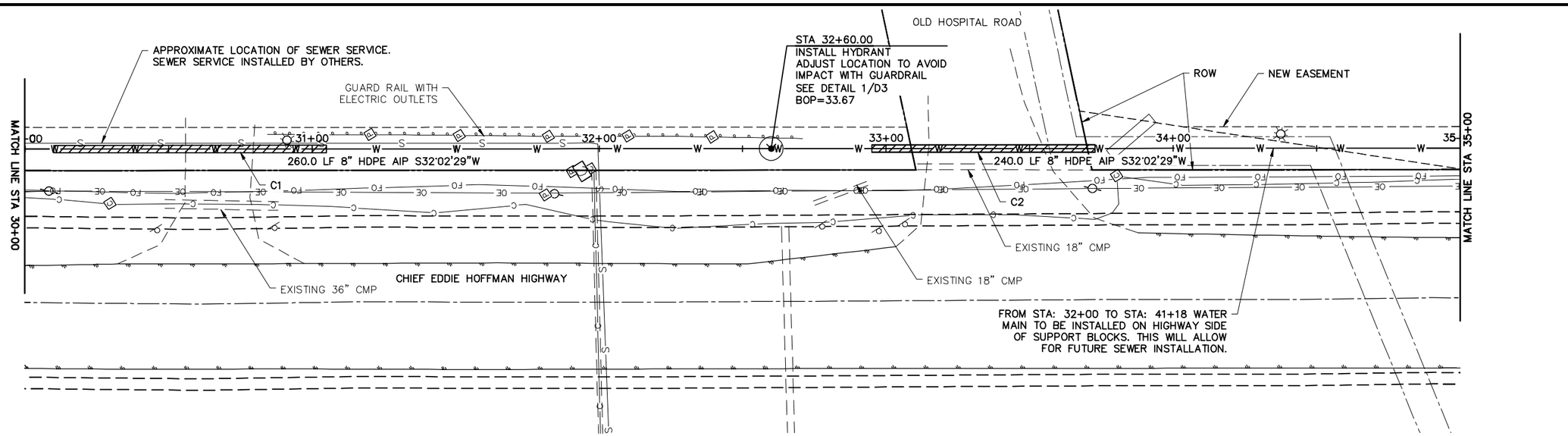

PROPOSED CROSSING SCHEDULE					
CROSSING NUMBER	CASING SIZE (in)	LENGTH (ft)	STA BEGIN	STA END	NOTES
C1	N/A	95	30+10	31+05	SEE DETAIL 1/D6
C2	30	78	32+95	33+73	SEE DETAIL 2/D6

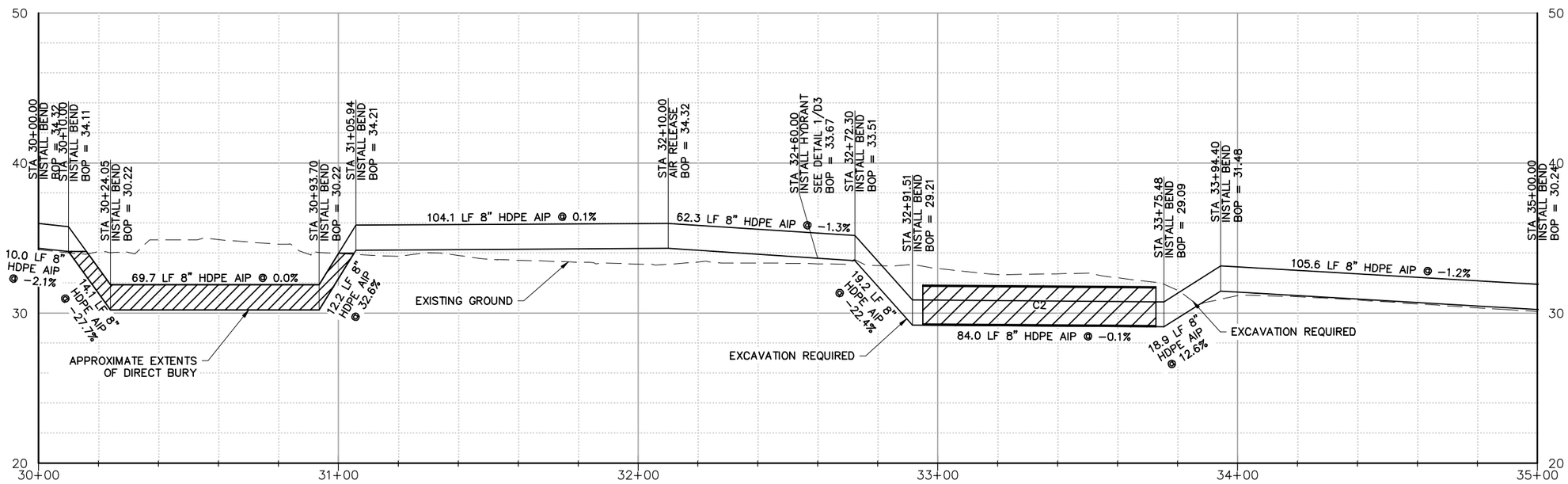

STATE OF ALASKA
49TH
AARON R. CHRISTIE
CE 10967
10-19-16
REGISTERED PROFESSIONAL ENGINEER

BETHEL
ALASKA

DOWL
AECL848
WWW.DOWL.COM
3535 College Road, #100
Fairbanks, Alaska 99709
907-374-0275

INSTITUTIONAL CORRIDOR PIPED WATER SYSTEM
BETHEL, ALASKA

PLAN AND PROFILE

PROJECT 1123.62833.01
DATE 10/18/2016

© DOWL 2016

SHEET
C07

C:\Civil 3D Projects\23\61833-01\Civil\SC14-CS-PP-61833.dwg PLOT DATE 2016-10-19 17:56 SAVED DATE 2016-10-19 17:24 USER: asetten

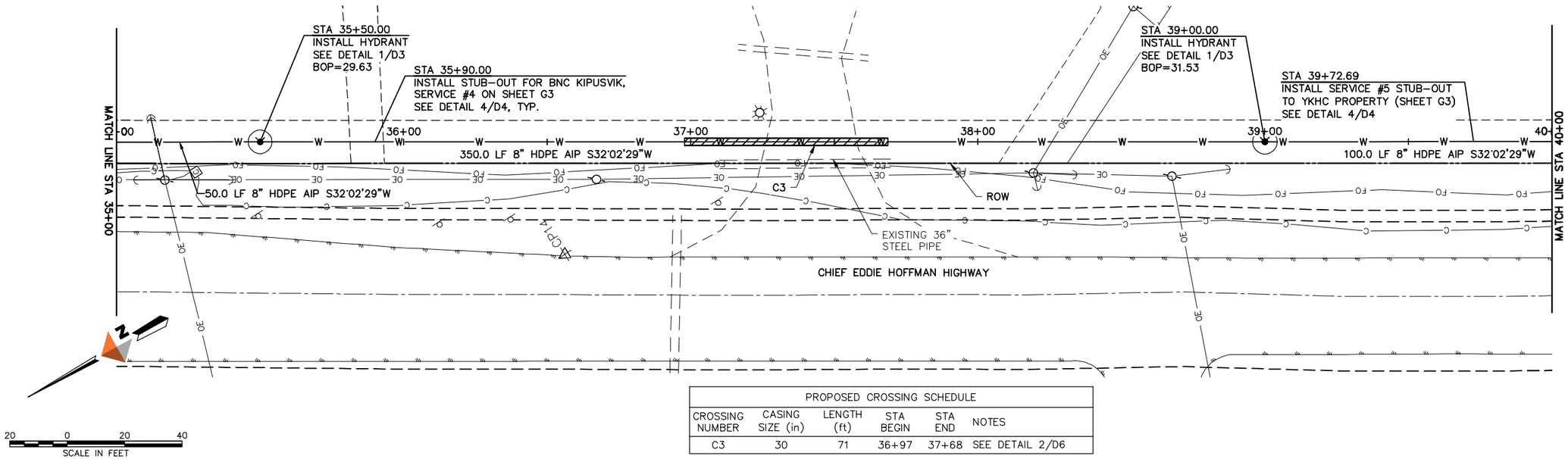

PROPOSED CROSSING SCHEDULE					
CROSSING NUMBER	CASING SIZE (in)	LENGTH (ft)	STA BEGIN	STA END	NOTES
C3	30	71	36+97	37+68	SEE DETAIL 2/D6

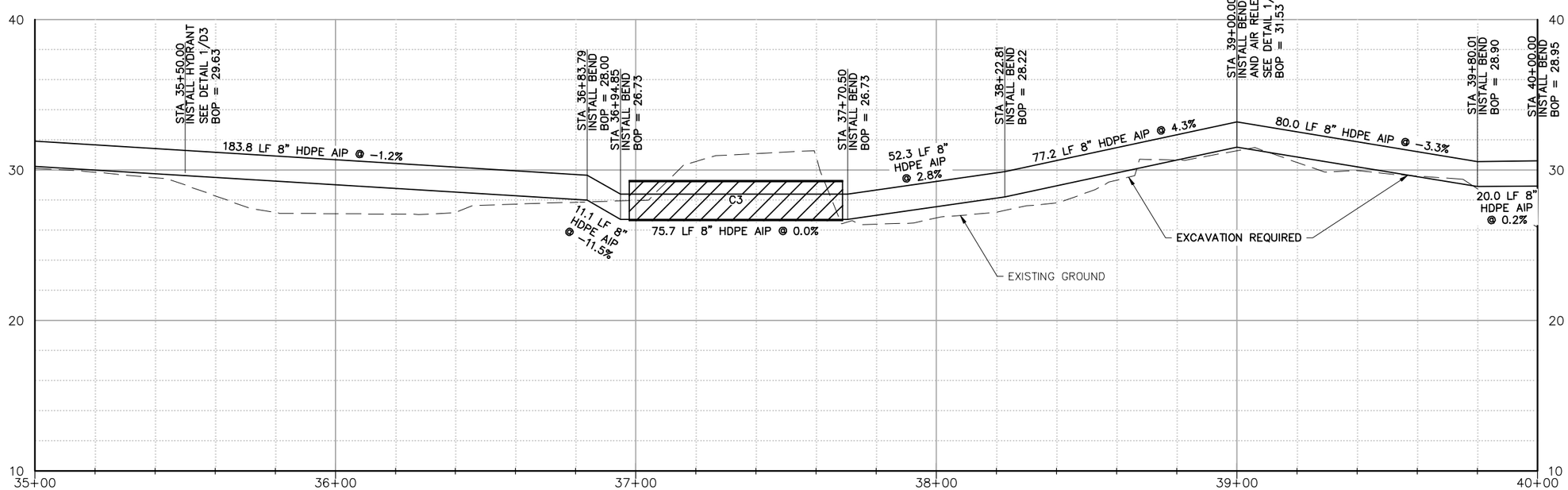

STATE OF ALASKA
49TH
AARON R. CHRISTIE
CE 10967
10-19-16
REGISTERED PROFESSIONAL ENGINEER

BETHEL ALASKA

DOWL
WWW.DOWL.COM
3535 College Road, #100
Fairbanks, Alaska 99709
907-374-0275

AECL848

INSTITUTIONAL CORRIDOR PIPED WATER SYSTEM
BETHEL, ALASKA

PLAN AND PROFILE

PROJECT 1123.62833.01
DATE 10/18/2016

© DOWL 2016

SHEET
C08

C:\Civil 3D Projects\23\61833-01\Civil\SC14-CS-PP-61833.dwg PLOT DATE 2016-10-19 17:56 SAVED DATE 2016-10-19 17:24 USER: asetten

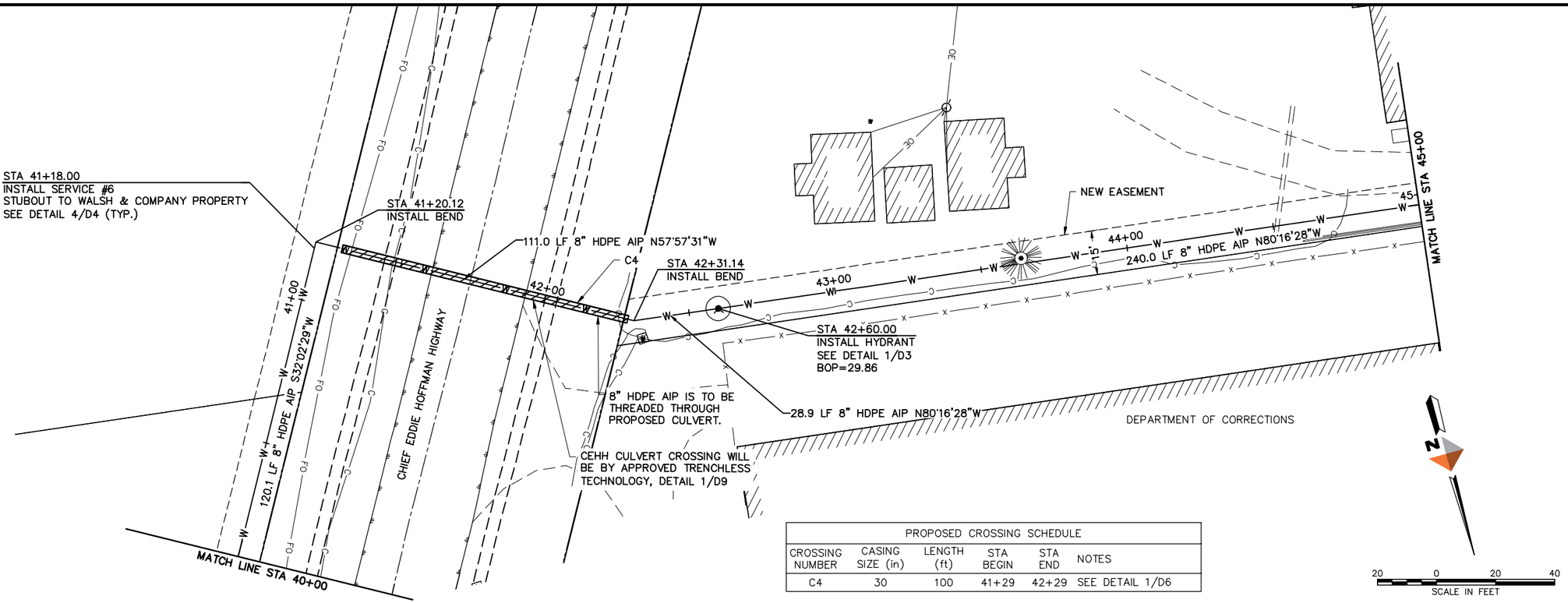

PROPOSED CROSSING SCHEDULE					
CROSSING NUMBER	CASING SIZE (in)	LENGTH (ft)	STA BEGIN	STA END	NOTES
C4	30	100	41+29	42+29	SEE DETAIL 1/D6

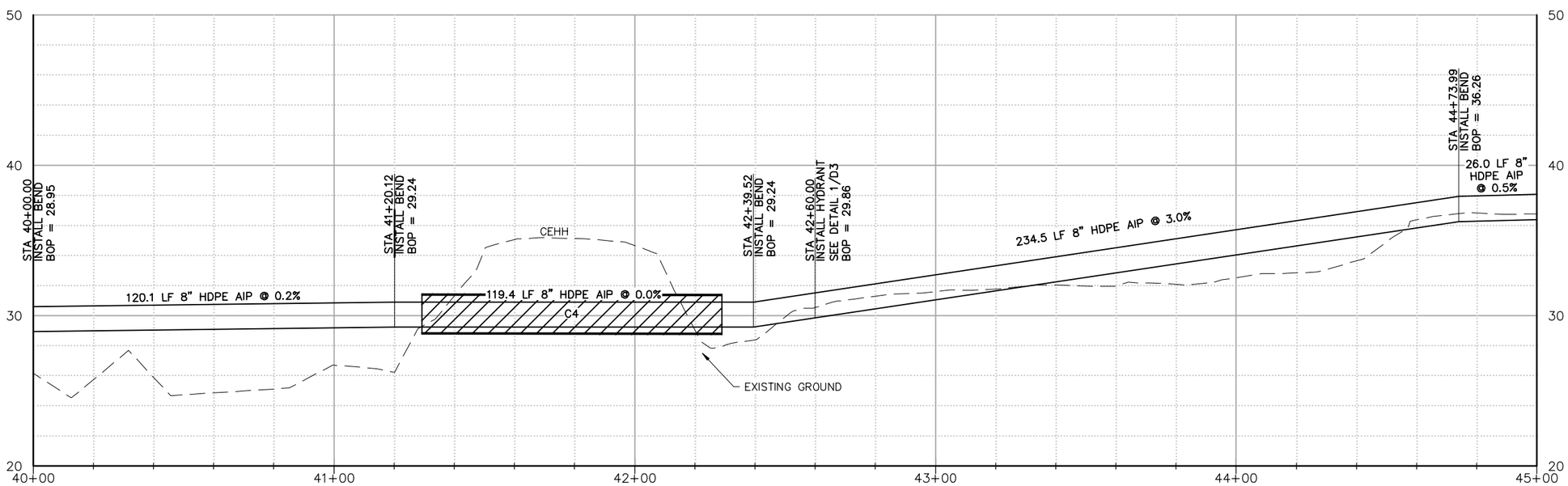

STATE OF ALASKA
49TH
AARON R. CHRISTIE
CE 10967
10.19.16
REGISTERED PROFESSIONAL ENGINEER

BETHEL ALASKA

DOWL
AECL848
WWW.DOWL.COM
3535 College Road, #100
Fairbanks, Alaska 99709
907-374-0275

INSTITUTIONAL CORRIDOR PIPED WATER SYSTEM
BETHEL, ALASKA
PLAN AND PROFILE

PROJECT 1123.62833.01
DATE 10/18/2016

© DOWL 2016

SHEET
C09

C:\Civil 3D Projects\23\61833-01\Civil\SC14-CS-PP-61833.dwg PLOT DATE 2016-10-19 17:56 SAVED DATE 2016-10-19 17:24 USER: asetten

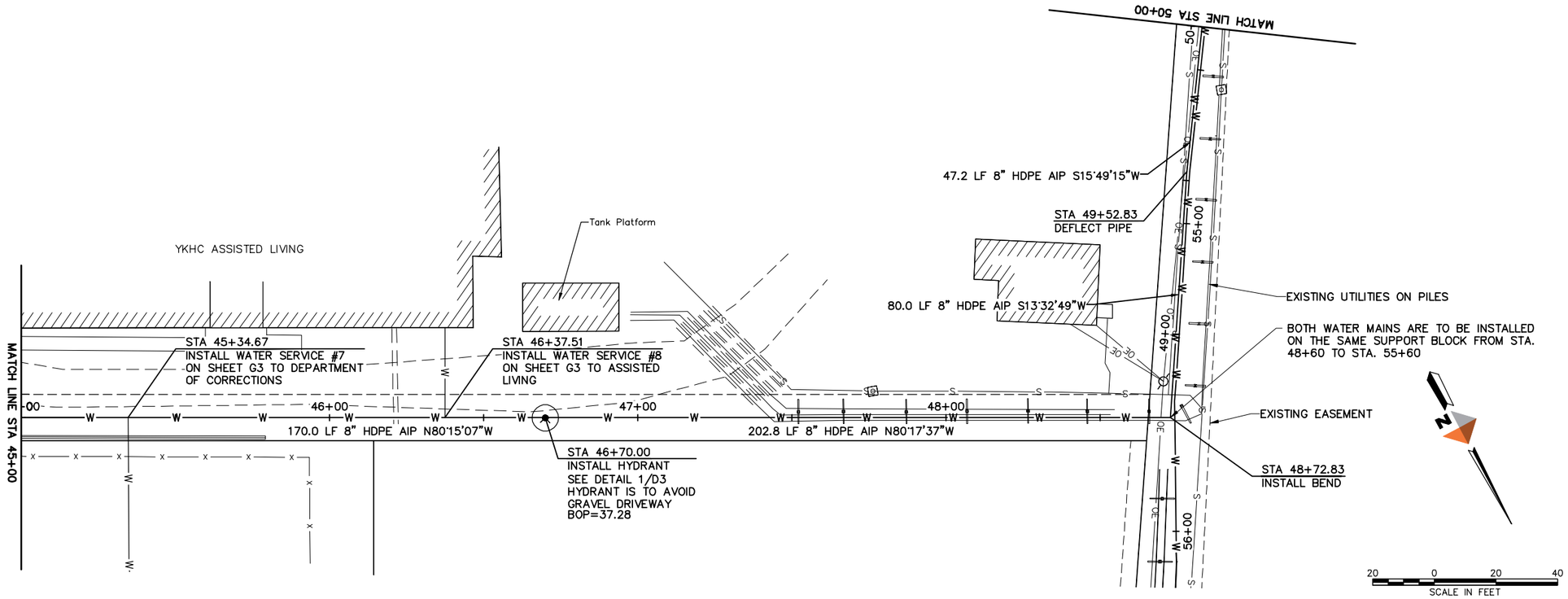

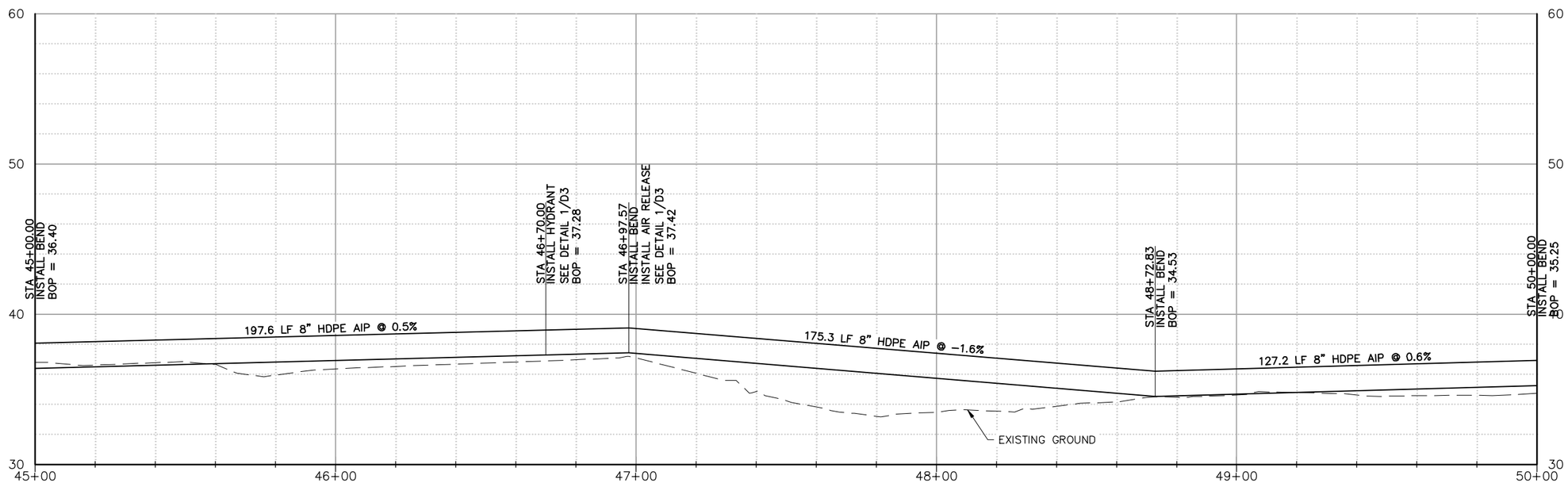

STATE OF ALASKA
49TH
AARON R. CHRISTIE
CE 10967
10.19.16
REGISTERED PROFESSIONAL ENGINEER

BETHEL ALASKA

DOWL
AECL848
WWW.DOWL.COM
3535 College Road, #100
Fairbanks, Alaska 99709
907-374-0275

INSTITUTIONAL CORRIDOR PIPED WATER SYSTEM
BETHEL, ALASKA
PLAN AND PROFILE

PROJECT 1123.62833.01
DATE 10/18/2016

© DOWL 2016

SHEET
C10

C:\Civil 3D Projects\23\61833-01\Civil\SC14-CS-PP-61833.dwg PLOT DATE 2016-10-19 17:56 SAVED DATE 2016-10-19 17:24 USER: asetten

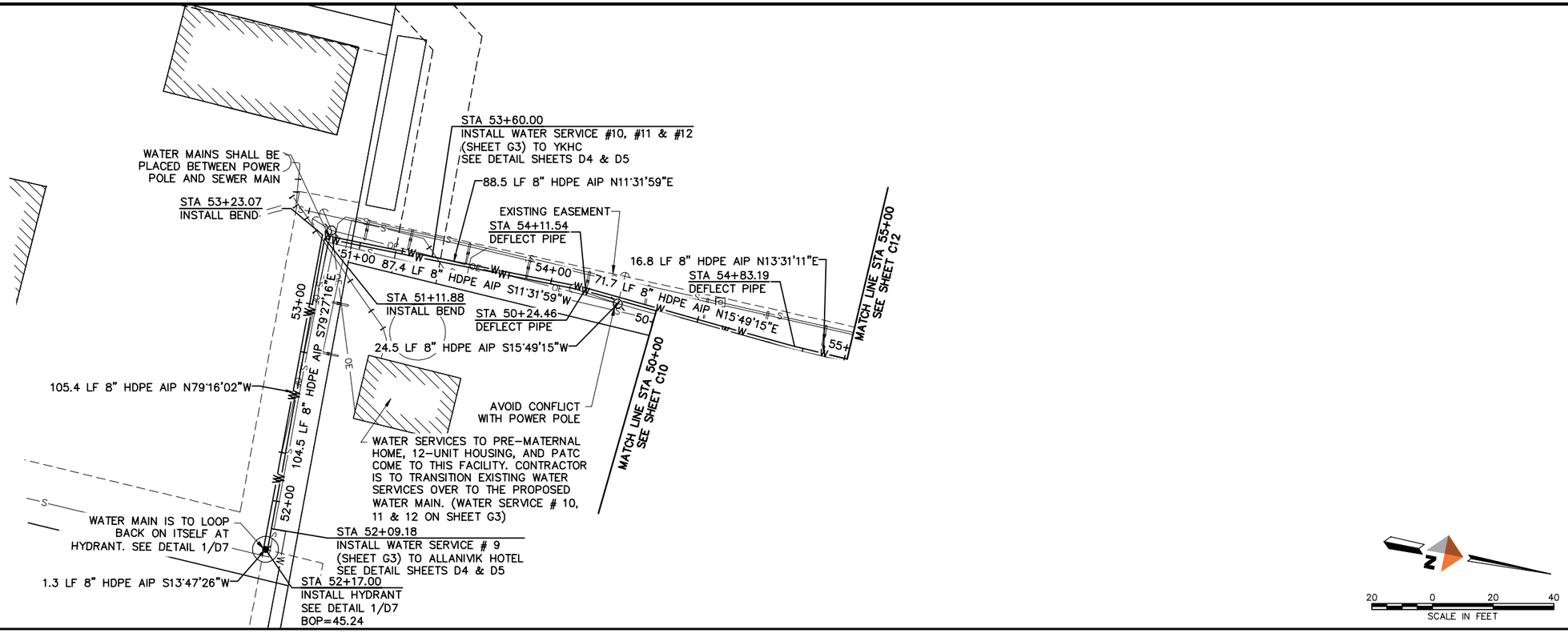

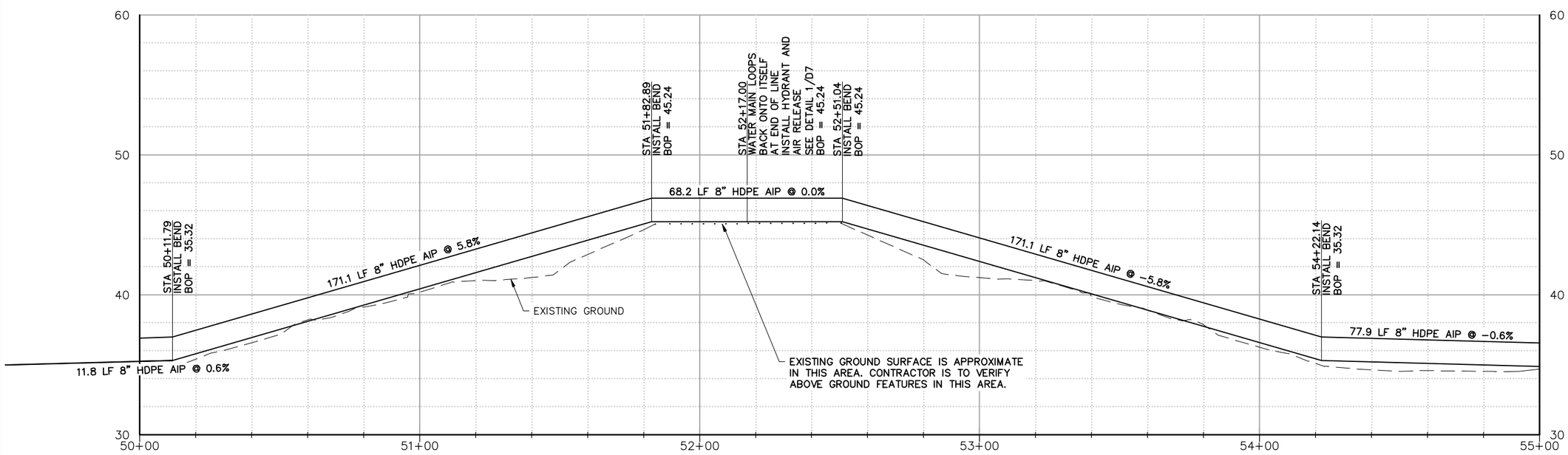

STATE OF ALASKA
49TH
AARON R. CHRISTIE
CE 10967
10-19-16
REGISTERED PROFESSIONAL ENGINEER

BETHEL ALASKA

DOWL
WWW.DOWL.COM
3535 College Road, #100
Fairbanks, Alaska 99709
907-374-0275
AECL848

INSTITUTIONAL CORRIDOR PIPED WATER SYSTEM
BETHEL, ALASKA
PLAN AND PROFILE

PROJECT 1123.62833.01
DATE 10/18/2016

© DOWL 2016

SHEET
C11

C:\Civil 3D Projects\23\61833-01\Civil\SC14-CS-PP-61833.dwg PLOT DATE 2016-10-19 17:56 SAVED DATE 2016-10-19 17:24 USER: asetten

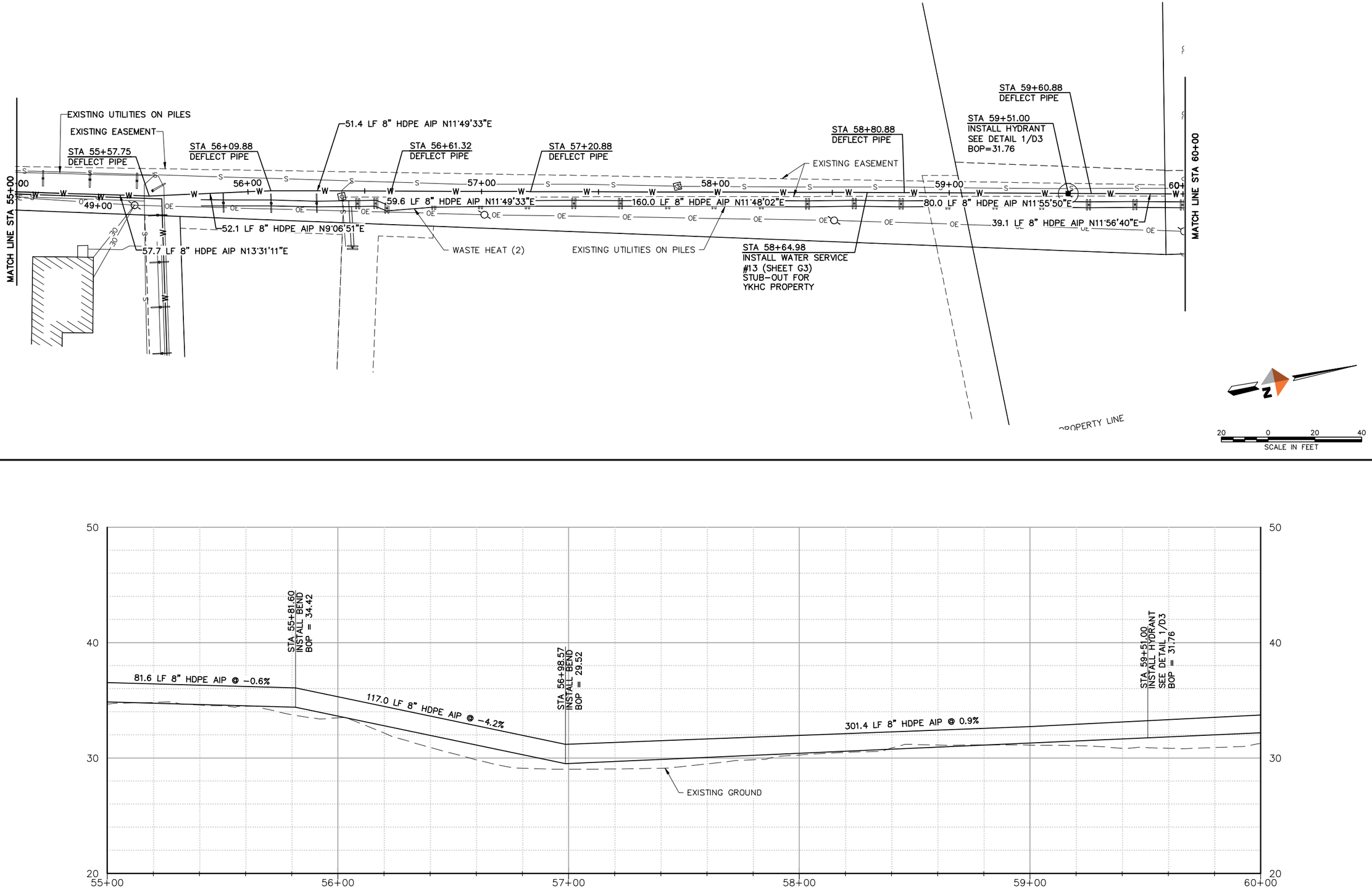

STATE OF ALASKA
49TH
AARON R. CHRISTIE
CE 10967
10-19-16
REGISTERED PROFESSIONAL ENGINEER

BETHEL ALASKA

DOWL
WWW.DOWL.COM
3535 College Road, #100
Fairbanks, Alaska 99709
907-374-0275
AECL848

INSTITUTIONAL CORRIDOR PIPED WATER SYSTEM
BETHEL, ALASKA
PLAN AND PROFILE

PROJECT 1123.62833.01
DATE 10/18/2016

© DOWL 2016

SHEET
C12

C:\Civil 3D Projects\23\61833-01\Civil\SC14-CS-PP-61833.dwg PLOT DATE 2016-10-19 17:57 SAVED DATE 2016-10-19 17:24 USER: asetten

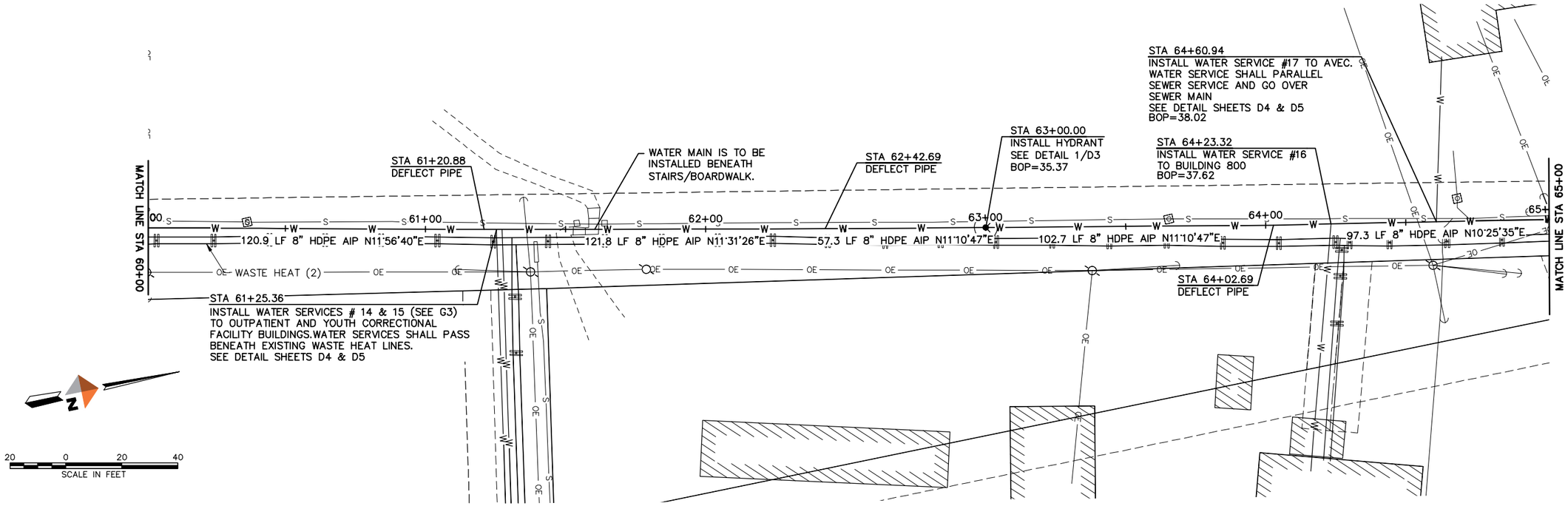

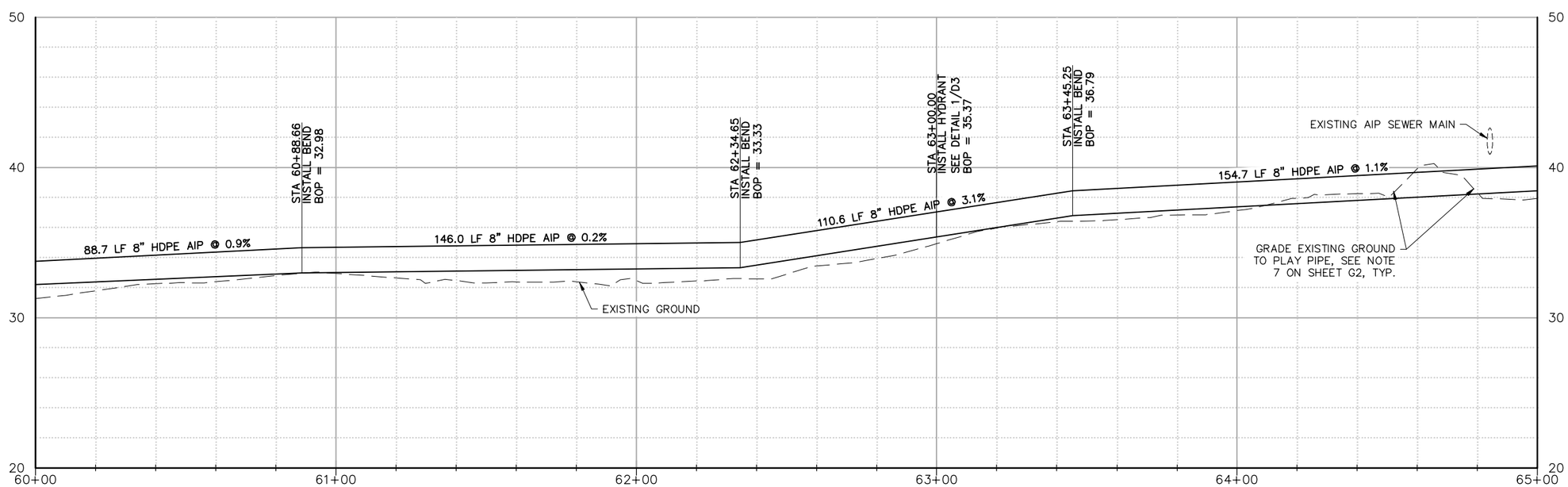

STATE OF ALASKA
49TH
AARON R. CHRISTIE
CE 10967
10-19-16
REGISTERED PROFESSIONAL ENGINEER

BETHEL ALASKA

DOWL
WWW.DOWL.COM
3535 College Road, #100
Fairbanks, Alaska 99709
907-374-0275
AECL848

INSTITUTIONAL CORRIDOR PIPED WATER SYSTEM
BETHEL, ALASKA

PLAN AND PROFILE

PROJECT 1123.62833.01
DATE 10/18/2016

© DOWL 2016

SHEET
C13

C:\Civil 3D Projects\23\61833-01\Civil\SC14-CS-PP-61833.dwg PLOT DATE 2016-10-19 17:57 SAVED DATE 2016-10-19 17:24 USER: asetten

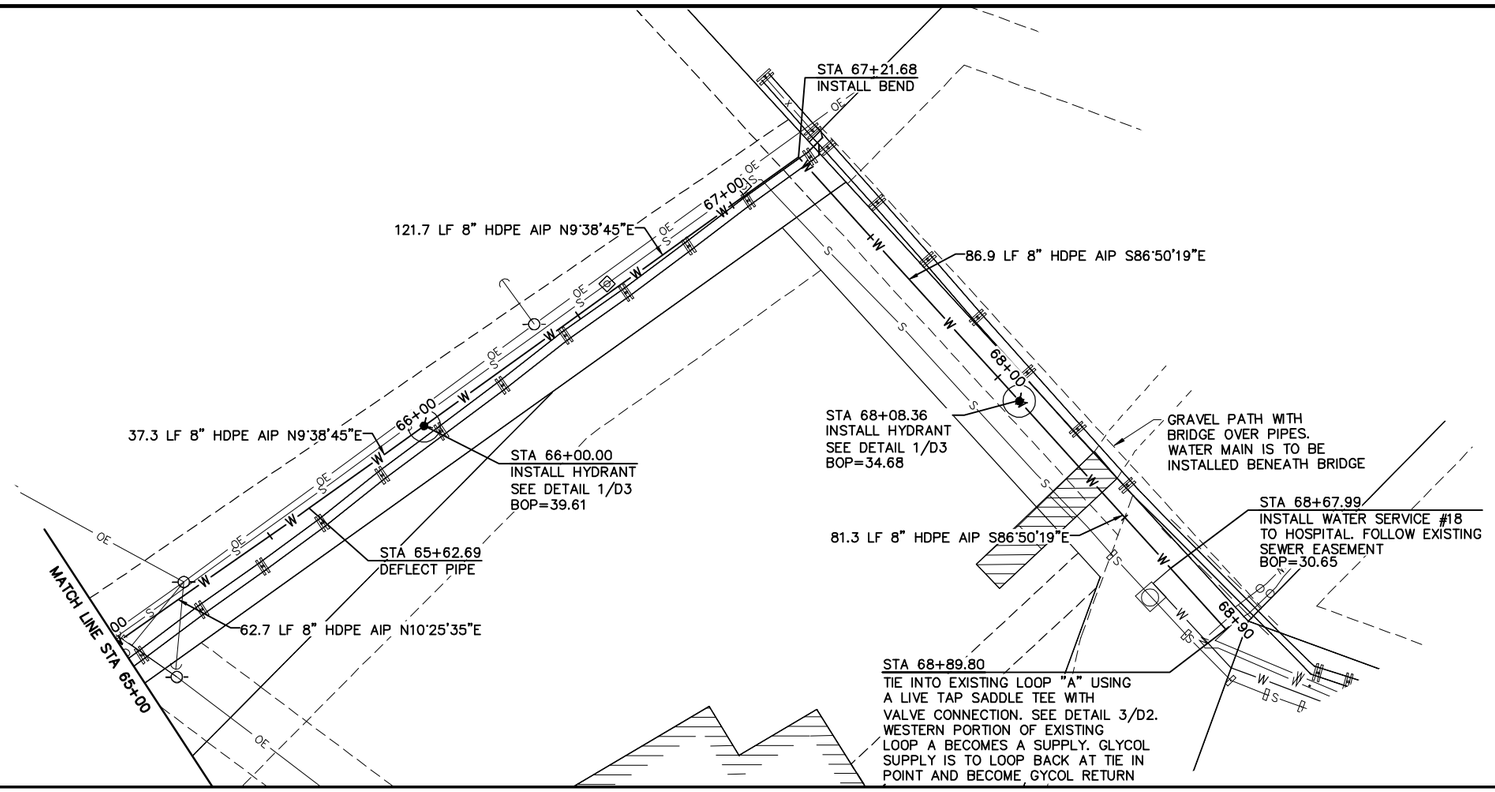

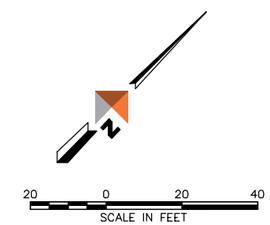

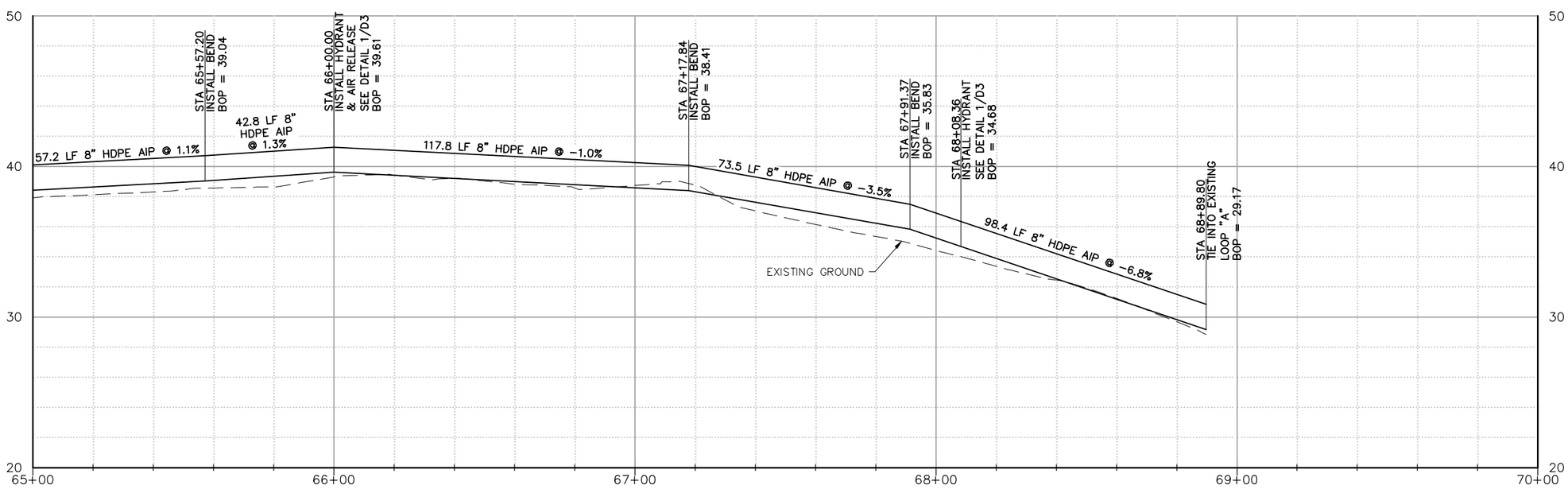

STATE OF ALASKA
49TH
AARON R. CHRISTIE
CE 10967
10-19-16
REGISTERED PROFESSIONAL ENGINEER

BETHEL ALASKA

DOWL
WWW.DOWL.COM
AECL848
3535 College Road, #100
Fairbanks, Alaska 99709
907-374-0275

INSTITUTIONAL CORRIDOR PIPED WATER SYSTEM
BETHEL, ALASKA
PLAN AND PROFILE

PROJECT 1123.62833.01
DATE 10/18/2016

© DOWL 2016

SHEET
C14

C:\Civil 3D Projects\23\61833-01\Civil\SC14-CS-PP-61833.dwg PLOT DATE 2016-10-19 17:57 SAVED DATE 2016-10-19 17:24 USER: asetten

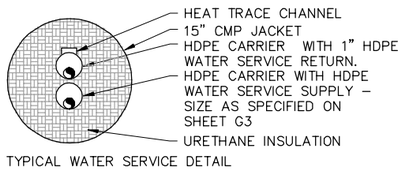

TYPICAL WATER SERVICE DETAIL

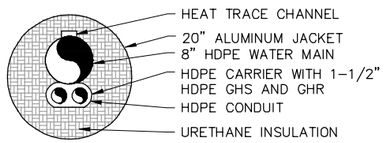

WATER MAIN W/ GLYCOL DETAIL

NOTE: SEE SPECIFICATIONS FOR OWNER PROCURED MATERIALS. DETAIL IS FOR REFERENCE ONLY.

1/D1 ARCTIC PIPE SECTIONS
NTS

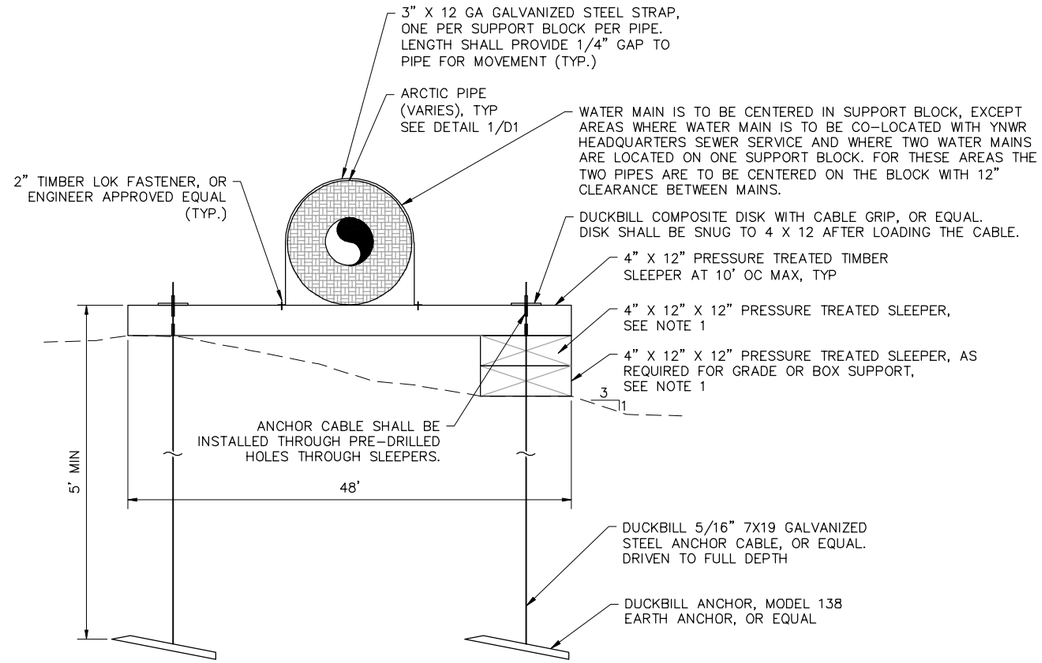

2/D1 SUPPORT BLOCK DETAILS
NTS

SUPPORT BLOCK AND PIER ANCHOR NOTES

1. AT THE CONTRACTOR'S OPTION, THE TOP 4"x12" PRESSURE TREATED TIMBER MAY BE PLACED ON D1 CLASSIFIED MATERIAL WITH A 3:1 SLOPE, IN LIEU OF ADDITIONAL PRESSURE TREATED TIMBER SLEEPERS. PRESSURE TREATED TIMBER SLEEPERS MUST BE SECURED WITH A ANCHOR AS SHOWN IN DETAIL 2/D1.
2. IF PERMAFROST IS ENCOUNTERED, THE PIER ANCHOR SHALL BE ADVANCED TO 2' MINIMUM BELOW THE TOP OF THE PERMAFROST. (NOTE: IF BURY DEPTH IS LESS THAN 8 FT NOTIFY THE ENGINEER.) WHEN UNFROZEN SOIL IS PRESENT, THE HELIX SHALL BE INSTALLED TO A MINIMUM DEPTH OF 15' AND A TORQUE OF 1,500 FOOT POUNDS. A TORQUE METER SHALL BE PROVIDED BY THE CONTRACTOR AND USED TO MONITOR EACH PIPE INSTALLATION. OWNER'S REPRESENTATIVE APPROVAL IS REQUIRED FOR ALL INSTALLATIONS.
3. INSTALL SUPPORTS BLOCKS EVERY 10 FEET IN THE LOCATIONS STATED IN THE PIPE SUPPORT SCHEDULE.
4. INSTALL PIER ANCHORS EVERY 10 FEET, IN THE LOCATIONS STATED IN THE PIPE SUPPORT SCHEDULE.
5. ALL METAL PARTS AND FASTENERS SHALL BE HOT DIPPED GALVANIZED. FIELD CUTS SHALL BE FIELD–TREATED WITH AN APPROVED COLD GALVANIZED PRODUCT.

PIPE SUPPORT SCHEDULE

SUPPORT SYSTEM	BEGINING STATIONING	END STATIONING
PIER ANCHORS	1+00	16+80
SUPPORT BLOCKS	16+80	68+90
SUPPORT BLOCKS	0+00	1+00
SUPPORT BLOCKS	ALL SERVICES	ALL SERVICES

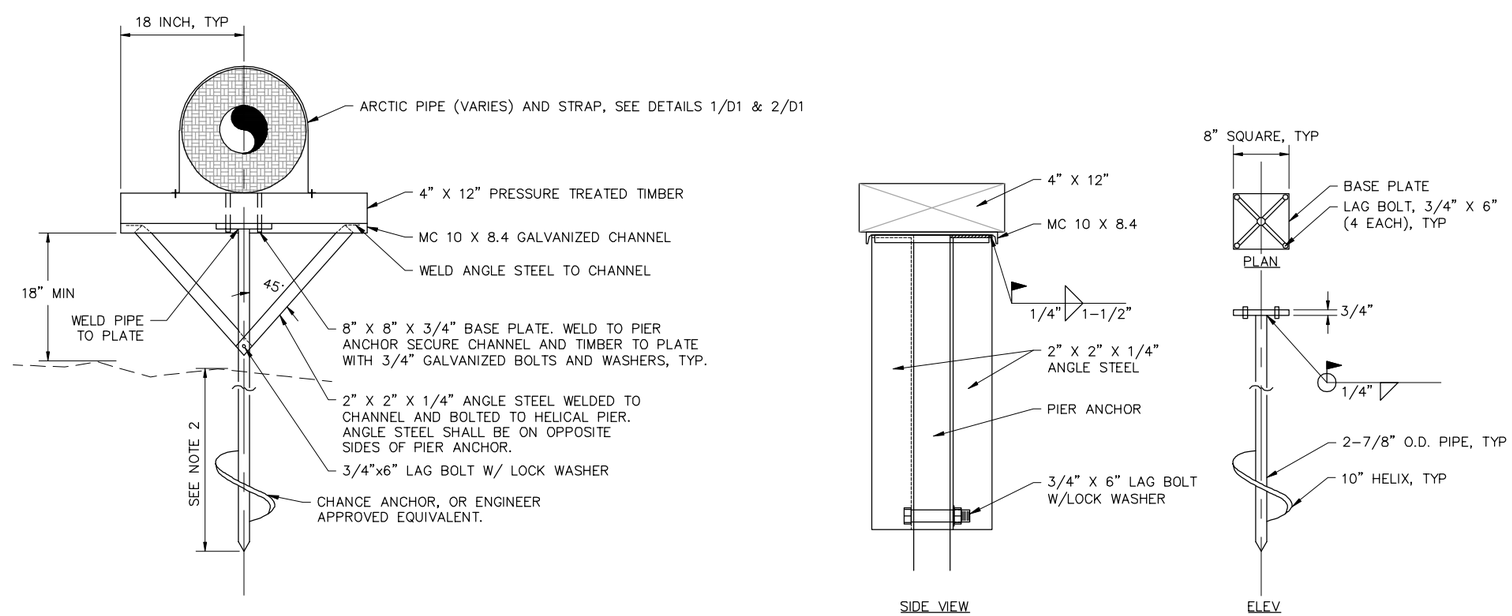

3/D1 PIER (CHANCE) ANCHOR DETAIL
NTS

STATE OF ALASKA 49TH
Gary L. Jenkins II
CE–9962
REGISTERED PROFESSIONAL ENGINEER

BETHEL ALASKA

DOWL
AECL848
WWW.DOWL.COM
3535 College Road, #100
Fairbanks, Alaska 99709
907-374-0275

INSTITUTIONAL CORRIDOR PIPED WATER SYSTEM
BETHEL, ALASKA
PIPE SUPPORT DETAILS

PROJECT 1123.62833.01
DATE 10/18/2016

© DOWL 2016

SHEET
D1

C:\Civil 3D Projects\23\61833-01\Civil\SA14-CS-DT-61833.dwg PLOT DATE 2016-10-20 11:40 SAVED DATE 2016-10-20 11:16 USER: asetten

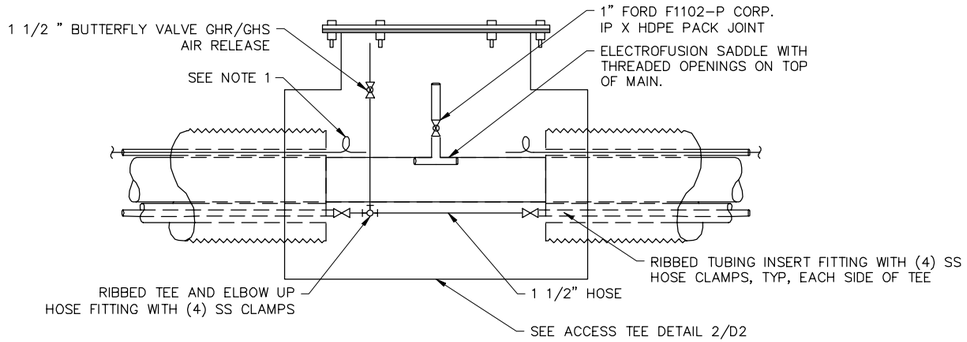

NOTES:
1. TERMINATE HEAT TRACE CHANNEL, EXTEND HEAT TRACE PULL ROPE 2'± INSIDE ACCESS TEE AREA. PULL ROPES WILL RUN IN HEAT TRACE CONDUIT BETWEEN AIR RELEASE VALVES AND SERVICE BOXES.
2. PROVIDE 3" MINIMUM INSULATION ON REMOVABLE COVER PLATE AND WALLS OF ACCESS TEE. PROVIDE OPEN SPACE ACCESS FOR OPERATION AND MAINTENANCE OF THE AIR RELEASE.
3. INSTALL AIR RELEASE AT ALL HIGH POINTS OF PIPELINE. AIR RELEASE VALVES ARE SHOWN AT HIGH POINTS IN PLAN AND PROFILES. IF THERE ARE DISCREPANCIES, COORDINATE WITH OWNER'S REPRESENTATIVE.

1/D2 TYPICAL WATER MAIN AND GLYCOL SYSTEM AIR RELEASE
NTS

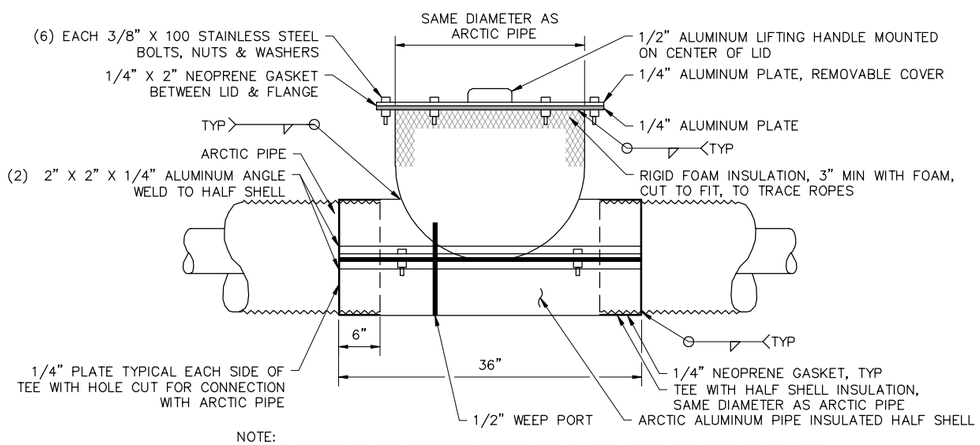

NOTE:
ACCESS TEE SHALL BE WEATHER PROOF AND PLACED OVER AIR RELEASE VALVES, CHECK VALVES AND PLUG VALVES. STENCIL NAME OF TYPE OF VALVE OR PORT ON ACCESS TEE COVER. ACCESS TEES SHALL BE PLACED ON TIMBER SLEEPERS TO CREATE A LOCALIZED HIGH POINT.

2/D2 ACCESS TEE DETAIL
NTS

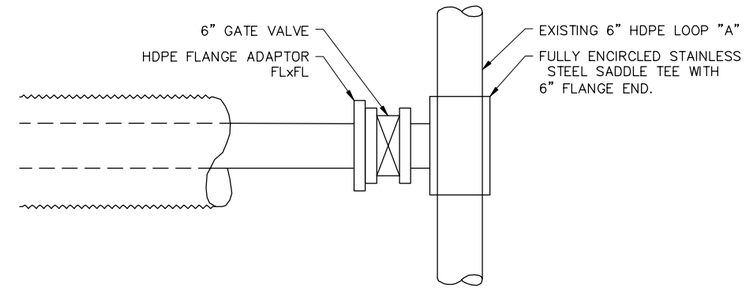

NOTE:
1. INSTALL ACCESS TEE OVER 6" GATE VALVE. SEE DETAIL 2/D2. TEE IS TO BE INSULATED AND A TEE JOINT KIT IS TO BE INSTALLED.
2. GLYCOL LINES WILL LOOP BACK AT THE TIE IN POINT.
3. PROPOSED MAIN AND EXISTING MAIN SHALL BE SUPPORTED WITH SUPPORT BLOCKS AND/OR TIMBER SLEEPERS. USE OF SUPPORTS SHALL NOT CREATE A LOCALIZED HIGHT POINT.

3/D2 TIE-IN TO EXISTING LOOP A
NTS

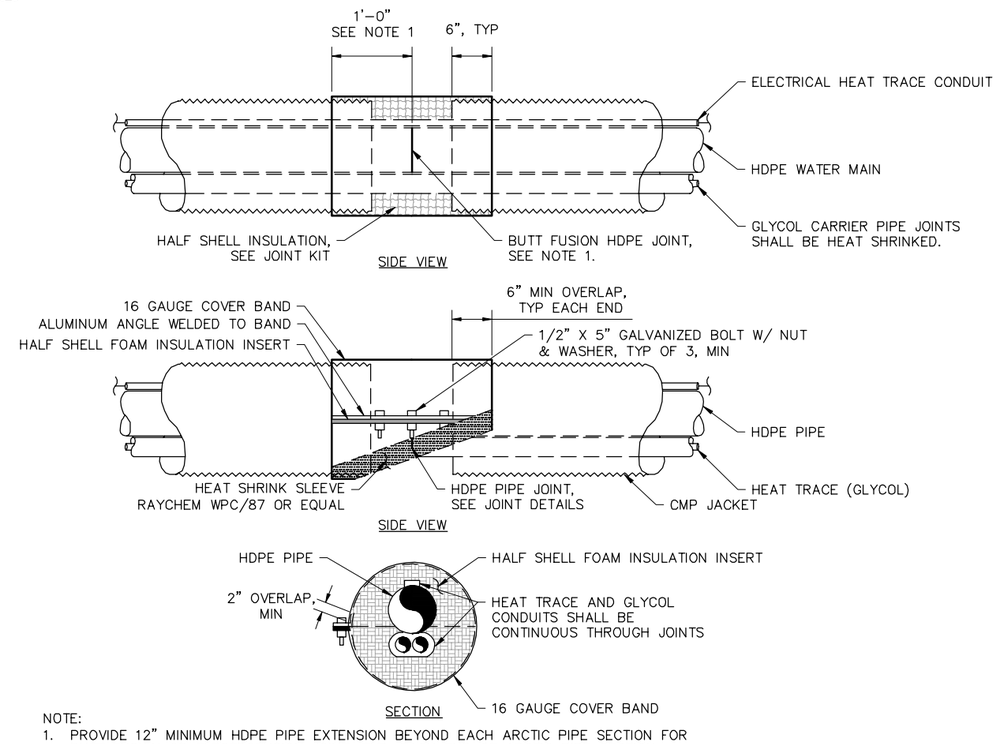

NOTE:
1. PROVIDE 12" MINIMUM HDPE PIPE EXTENSION BEYOND EACH ARCTIC PIPE SECTION FOR BUTT FUSION OR ELECTROFUSION JOINT, TYP, EACH END OF ARCTIC PIPE SECTION. ELECTROFUSION COUPLINGS SHALL ONLY BE ALLOWED ON A CASE BY CASE BASIS, UPON APPROVAL BY ENGINEER.
2. REMOVE BEAD AT FUSE JOINT PRIOR TO PLACEMENT OF HALF SHELLS.

4/D2 TYPICAL JOINT KIT (HALF SHELL) DETAIL
NTS

STATE OF ALASKA 49TH
Chase A. Nelson CE-13867 10/18/16
REGISTERED PROFESSIONAL ENGINEER

BETHEL ALASKA

DOWL
AECL848
www.dowl.com
3535 College Road, #100
Fairbanks, Alaska 99709
907-374-0275

INSTITUTIONAL CORRIDOR PIPED WATER SYSTEM
BETHEL, ALASKA
PIPE SERVICE DETAILS

PROJECT 1123.62833.01
DATE 10/18/2016

© DOWL 2016

SHEET
D2

C:\Civil 3D Projects\23\61833-01\Civil\SA14-CS-DT-61833.dwg PLOT DATE 2016-10-20 11:44 SAVED DATE 2016-10-20 11:16 USER: asetten

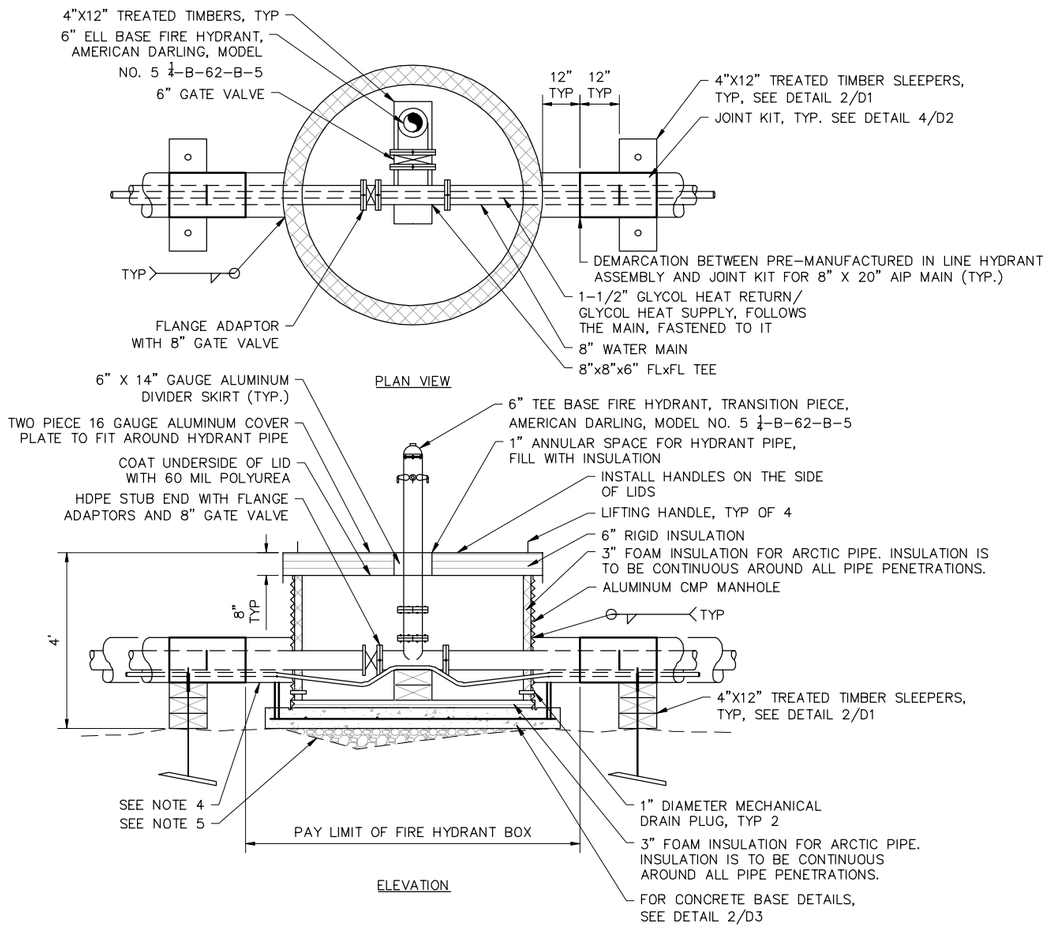

NOTES:
1. REFER TO PLAN AND PROFILE DRAWINGS FOR FIRE HYDRANT ORIENTATION AND LOCATION.
2. PLACE ALL FIRE HYDRANTS WITH PUMPER CONNECTIONS ORIENTED PERPENDICULAR TO ROADWAY CENTERLINE, PER UNIFORM FIRE CODE.
3. PROVIDE STRAP SUPPORT TO 4"x12" TREATED TIMBER, SEE DETAIL 2/D1.
4. PROVIDE 12 GAUGE AL INSULATED PIPE NOZZLE (NON CORRUGATED). WELD TO 12 GAUGE AL CMP MANHOLE AS SHOWN, TYP.
5. SEE NOTE 2 OF HYDRANT BASE DETAIL 2/D3 FOR EXISTING GROUND PREPARATION REQUIREMENTS.
6. IN ACCORDANCE WITH SHEETS C1-C14, AIR RELEASE ARE CO-LOCATED WITH HYDRANTS WHEN POSSIBLE. AIR RELEASES ARE TO BE PLACED INSIDE THE HYDRANT BOX. VALVES FOR WATER MAIN AND GLYCOL AIR RELEASES WILL BE LOCATED INSIDE HYDRANT BOX.
7. INSIDE DIAMETER OF ACCESS COVER SHALL BE 1" LARGER THAN OUTSIDE DIAMETER OF AL CMP MANHOLE, TO PROVIDE SNUG FIT.

1 / D3 TYPICAL INLINE FIRE HYDRANT DETAIL
NTS

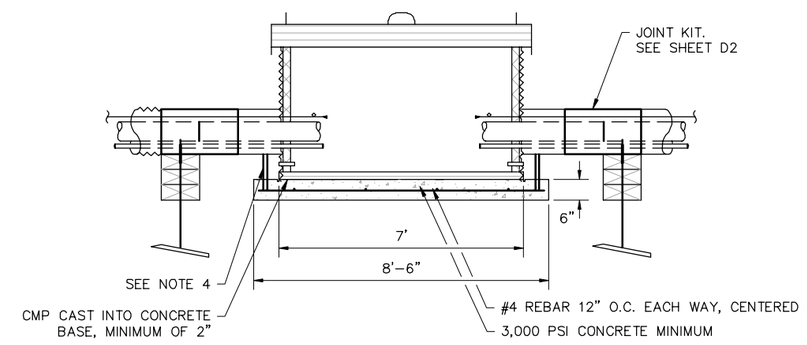

NOTES:
1. PROVIDE JOINT KIT, SEE SHEET D2.
2. PLACE GEOTEXTILE ON EXISTING GROUND AND LEVEL SURFACE WITH IMPORTED GRAVEL PRIOR TO MANHOLE PLACEMENT, TYP ALL ABOVE GRADE MANHOLE INSTALLATIONS. GEOTEXTILE SHALL EXTEND 12" BEYOND THE SLAB OR AS REQUIRED TO ACCOMODATE A 3H:1V FILL SLOPE AS REQUIRED FOR MANHOLE LEVELING.
3. APPLY BITUMASTIC COATING TO BOTH SIDES OF CMP.
4. REBAR LIFTING LUGS. CONTRACTOR TO FACILITATE INSTALLATION.

2 / D3 HYDRANT BASE DETAIL
NTS

STATE OF ALASKA 49TH
Chase A. Nelson CE-13867
61833.01 10/20/16
REGISTERED PROFESSIONAL ENGINEER

BETHEL ALASKA

DOWL
AECL848
WWW.DOWL.COM
3535 College Road, #100
Fairbanks, Alaska 99709
907-374-0275

INSTITUTIONAL CORRIDOR PIPED WATER SYSTEM
BETHEL, ALASKA
IN-LINE HYDRANT

PROJECT 1123.62833.01
DATE 10/18/2016

© DOWL 2016

SHEET
D3

C:\Civil 3D Projects\23\61833-01\Civil\SA14-CS-DT-61833.dwg PLOT DATE 2016-10-20 11:44 SAVED DATE 2016-10-20 11:16 USER: asetten

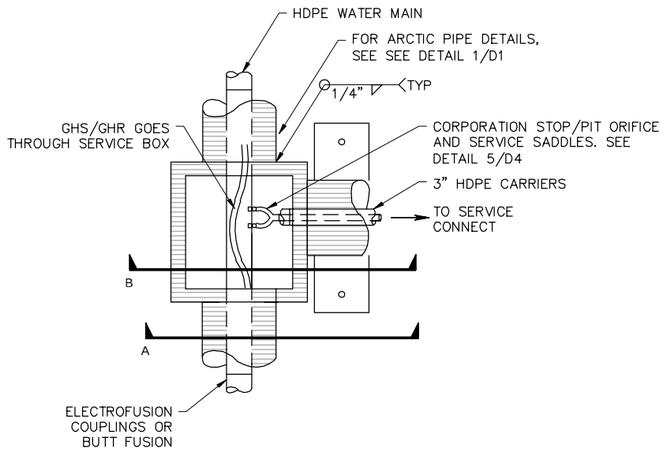

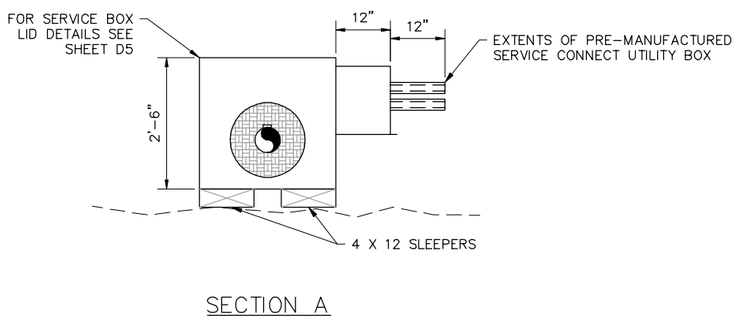

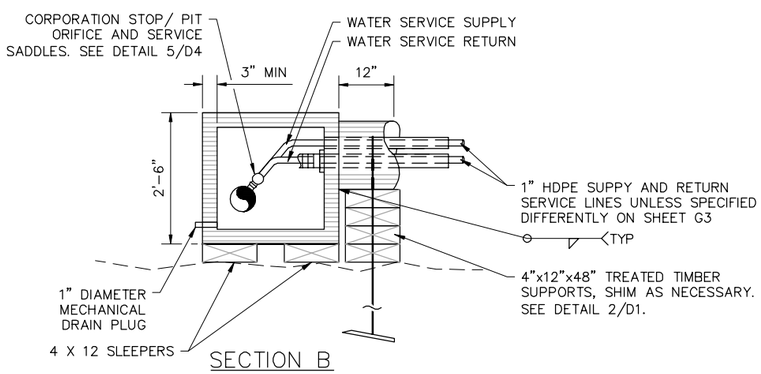

1/D4 SERVICE CONNECT UTILITY BOX
NTS

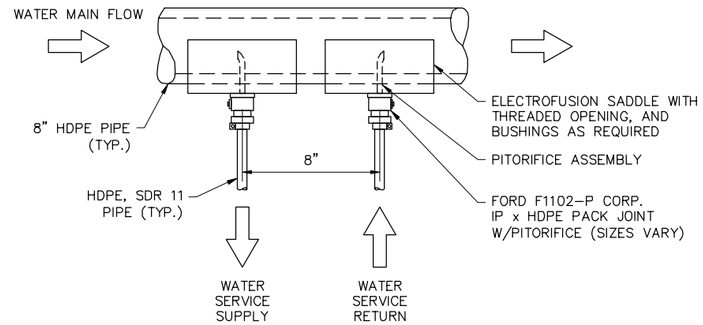

IMPORTANT: PITORIFICE ASSEMBLY MUST BE INSTALLED AS SHOWN ABOVE FOR PROPER OPERATION.

5/D4 PITORIFICE ASSEMBLY DETAIL
NTS

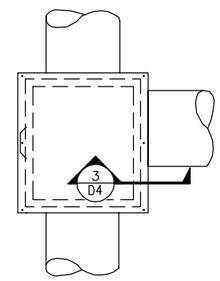

2/D4 SERVICE BOX HINGE COVER DETAIL
NTS

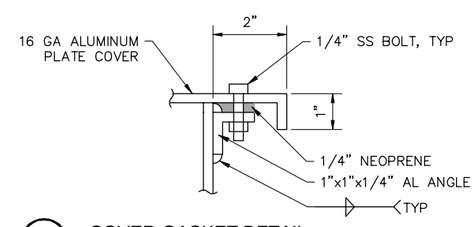

3/D4 COVER GASKET DETAIL
NTS

SERVICE CONNECTION NOTES:

1. SERVICE UTILITY BOXES WILL HAVE AN 8" HDPE WATER MAIN RUNNING EXPOSED THROUGH THEM. CONNECTIONS TO THE WATER MAIN WILL BE BY ELECTROFUSION COUPLING OR THERMOFUSION. SEE JOINT DETAILS FOR ADDITIONAL INFORMATION.
2. ALL SERVICE CONNECT UTILITY BOXES AND SERVICE LINE STUBOUT BOXES SHALL BE CONTINUOUSLY INSULATED WITH 3" OF RIGID INSULATION.
3. 60 MIL POLYSHIELD COATING SHALL COVER THE ENTIRE INTERIOR OF THE SERVICE BOX INCLUDING THE INTERIOR LID SURFACE AND SHALL EXTEND CONTINUOUSLY OVER THE TOP EDGE OF INSULATION AND PROVIDE A CONTINUOUS SEAL BETWEEN THE INSULATION AND THE ALUMINUM WALL.
4. ALL UTILITY CONNECT BOXES SHALL BE CONSTRUCTED OF 8 GAUGE ALUMINUM.
5. HEAT TRACE FROM SERVICE SHALL BE WRAPPED AROUND PIT ORIFICES BEFORE TERMINATING IN THE UTILITY BOX.

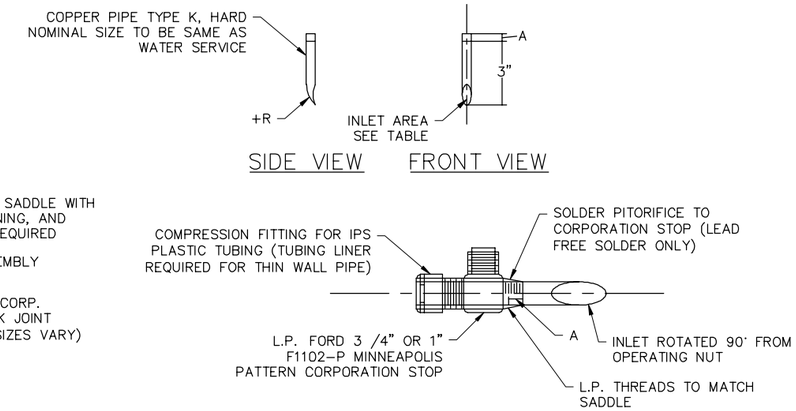

NOMINAL SIZE (IN.)	A(IN.)	R (IN.)	INLET AREA (SQ.IN)
1	1	2.25	1.34
2	1.25	3.25	5.40

FOR HOSPITAL WATER SERVICE CONTRACTOR SHALL INSTALL 8" X 8" X 4" TEES FOR SUPPLY, AND PIT ORIFICE FOR RETURNS.

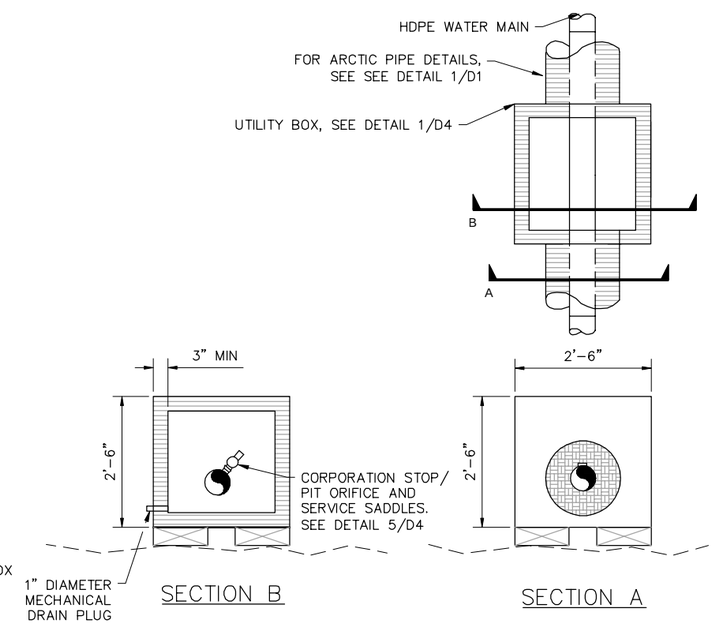

4/D4 SERVICE LINE STUBOUT BOX
NTS

STATE OF ALASKA 49TH
Chase A. Nelson CE-13867
10/18/16
REGISTERED PROFESSIONAL ENGINEER

BETHEL ALASKA

DOWL
AECL848
www.DOWL.com
3535 College Road, #100
Fairbanks, Alaska 99709
907-374-0275

INSTITUTIONAL CORRIDOR PIPED WATER SYSTEM
BETHEL, ALASKA
SERVICE UTILITY BOX DETAILS

PROJECT 1123.62833.01
DATE 10/18/2016

© DOWL 2016

SHEET
D4

C:\Civil 3D Projects\23\61833-01\Civil\SA14-CS-DT-61833.dwg PLOT DATE 2016-10-20 11:44 SAVED DATE 2016-10-20 11:16 USER: asetten

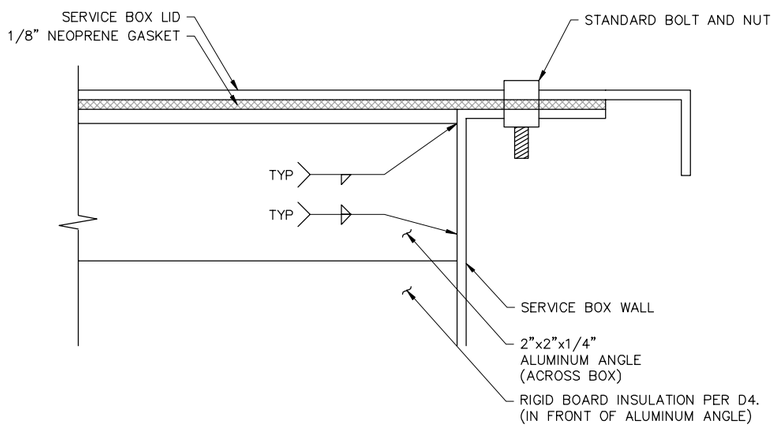

NOTE:
1. ALL WELDS SHALL BE CONTINUOUS.
2. REMOVE ALL POLYUREA ELASTOMER AND CLEAN SURFACES PRIOR TO WELDING.

1/D5 SERVICE BOX HINGE ANGLE CONNECTION
NTS

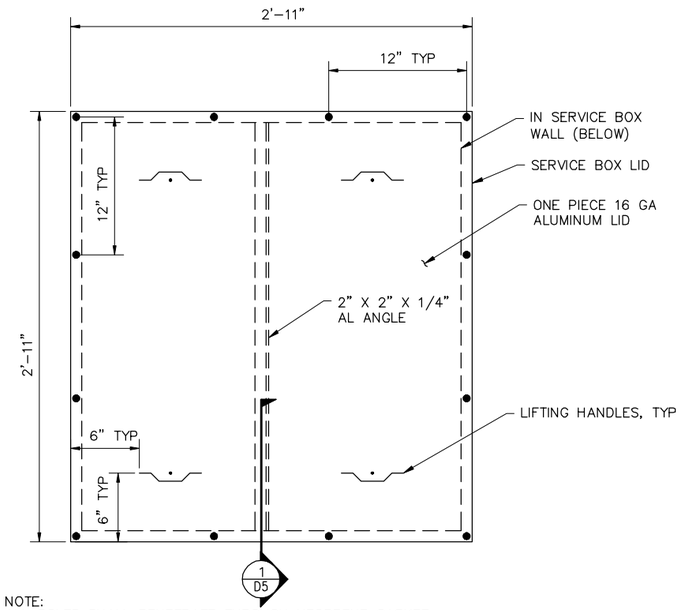

NOTE:
ALL BOLTS SHALL PENETRATE THROUGH NEOPRENE GASKET.

2/D5 SERVICE BOX LID BOLT LAYOUT AND DIMENSIONS, WATER
NTS

STATE OF ALASKA 49TH
Chase A. Nelson
CE-13867
61833.01
10/20/16
REGISTERED PROFESSIONAL ENGINEER

BETHEL ALASKA

DOWL
AECL848
WWW.DOWL.COM
3535 College Road, #100
Fairbanks, Alaska 99709
907-374-0275

INSTITUTIONAL CORRIDOR PIPED WATER SYSTEM
BETHEL, ALASKA
SERVICE UTILITY BOX DETAILS

PROJECT 1123.62833.01
DATE 10/18/2016

© DOWL 2016

SHEET
D5

C:\Civil 3D Projects\23\61833-01\Civil\SA14-CS-DT-61833.dwg PLOT DATE 2016-10-20 11:44 SAVED DATE 2016-10-20 11:16 USER: asetten

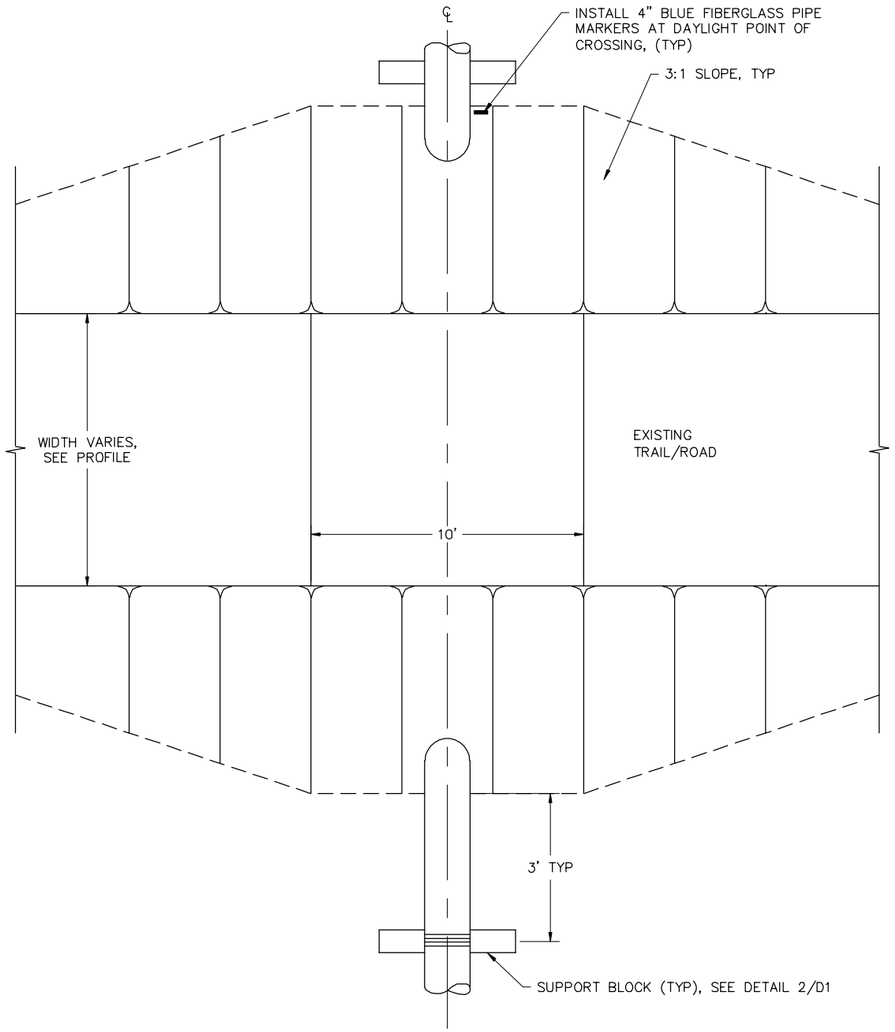

PLAN VIEW

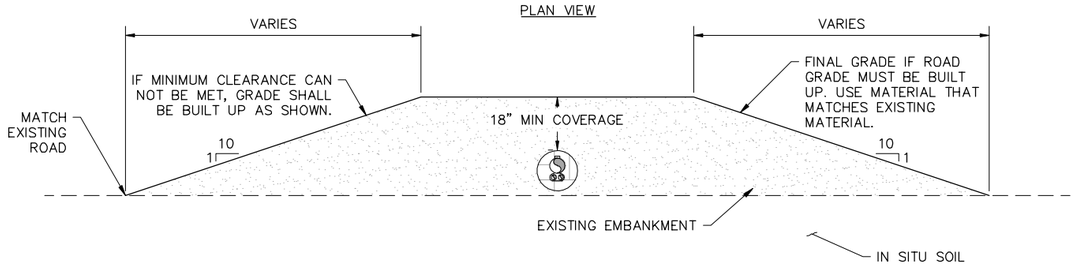

SECTION

1 D6 TYPICAL DIRECT BURY CROSSING
NTS

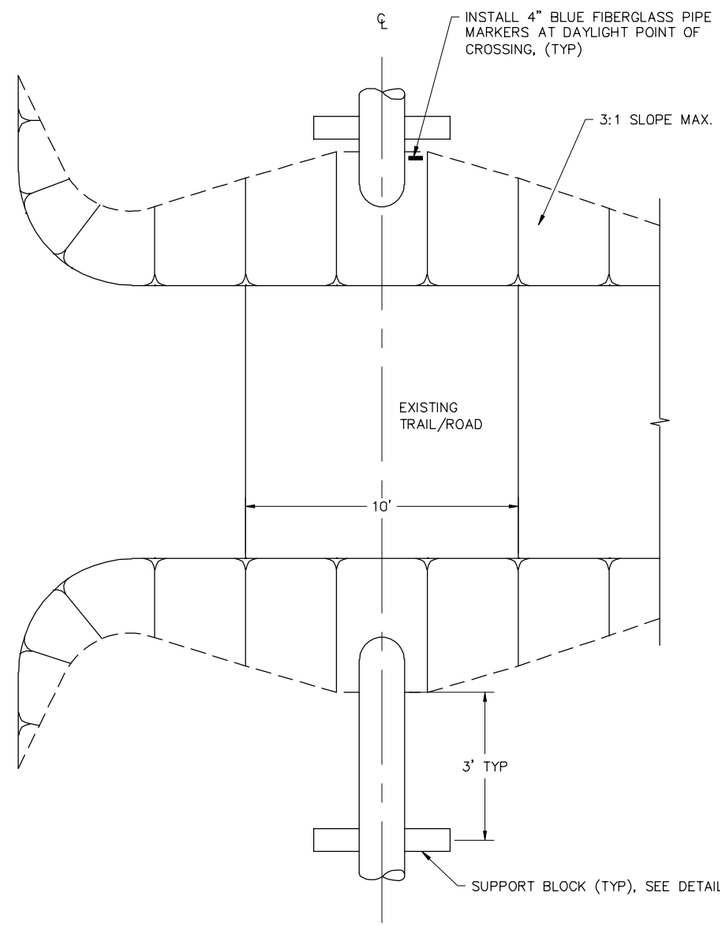

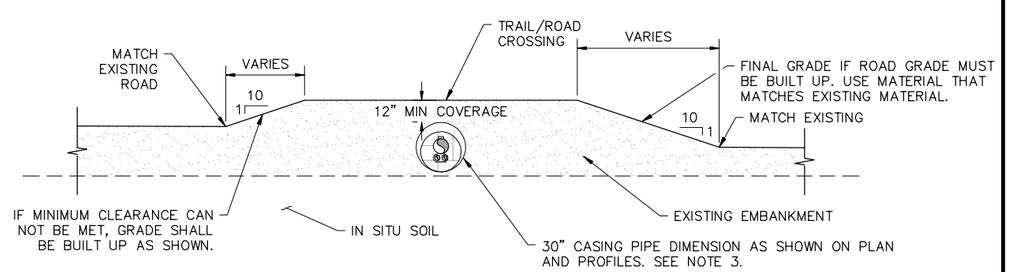

SECTION

2 D6 TYPICAL CASING CROSSING
NTS

NOTE:
1. EXISTING CASING AND DIRECT BURY INSTALLATIONS SHALL BE INSTALLED THROUGH EXISTING EMBANKMENTS. CROSSINGS, WHENEVER POSSIBLE ARE NOT TO RESULT IN CHANGES TO EXISTING GRADE. IF CHANGES ARE NECESSARY, THESES DETAILS SHOW MAXIMUM ALLOWABLE GRADES. IN SITU SOIL BENEATH EMBANKMENTS IS NOT TO BE DISTURBED.
2. IN AREAS WHERE CASING IS BELOW EXISTING GROUND, THE ENDS SHALL BE BACKFILLED WITH MATERIAL THAT MATCHES EXISTING DRIVEWAY OR ROAD MATERIAL.
3. CASING PIPE SHALL BE 16 GAGE GALVANIZED.

STATE OF ALASKA 49TH
Chase A. Nelson
CE-13867
61833.01
10/20/16
REGISTERED PROFESSIONAL ENGINEER

BETHEL ALASKA

DOWL
AECL848
WWW.DOWL.COM
3535 College Road, #100
Fairbanks, Alaska 99709
907-374-0275

INSTITUTIONAL CORRIDOR PIPED WATER SYSTEM
BETHEL, ALASKA

ROAD/TRAIL & DRIVEWAY CROSSING DETAILS

PROJECT 1123.62833.01
DATE 10/18/2016

© DOWL 2016

SHEET
D6

C:\Civil 3D Projects\23\61833-01\Civil\SA14-CS-DT-61833.dwg PLOT DATE 2016-10-20 11:44 SAVED DATE 2016-10-20 11:16 USER: asetten

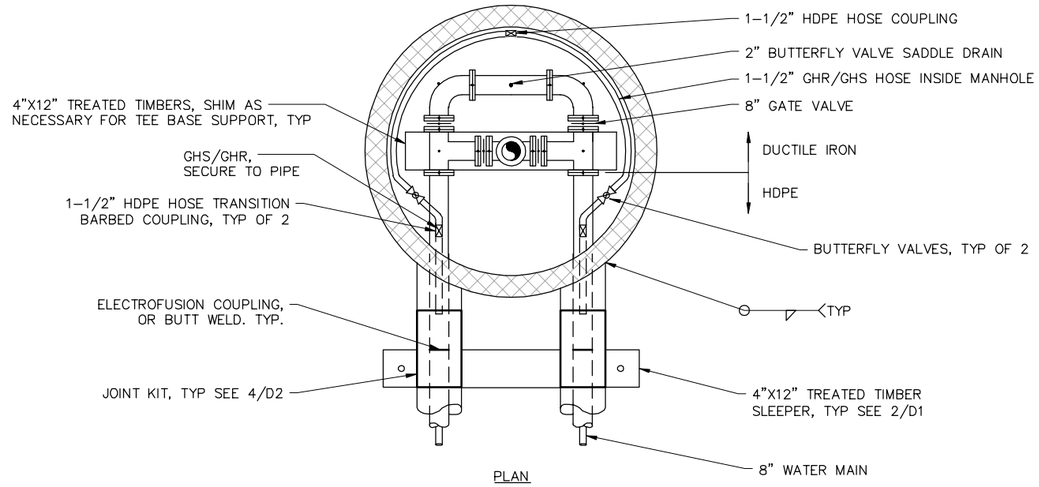

PLAN

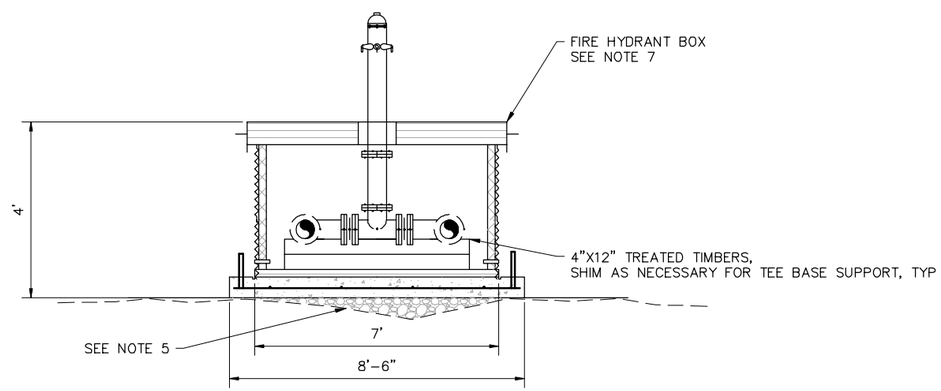

ELEVATION

NOTES:
1. THIS DETAIL IS TO BE USED ONCE, IT IS ALSO SHOWN AS AN ACCEPTABLE SOLUTION FOR HYDRANT INSTALLATION IF AN IRRESOLVABLE FIELD CONFLICT EXISTS.
2. REFER TO PLAN AND PROFILE DRAWINGS FOR FIRE HYDRANT ORIENTATION AND LOCATION.
3. PLACE ALL FIRE HYDRANTS WITH PUMPER CONNECTIONS ORIENTED PERPENDICULAR TO ROADWAY CENTERLINE, PER UNIFORM FIRE CODE.
4. PROVIDE 12 GAUGE ALUMINUM INSULATED PIPE NOZZLE (NON CORRUGATED) WELD TO 12 GAUGE ALUMINUM CMP MANHOLE AS SHOWN, TYP.
5. SEE DETAIL 2/D3 FOR EXISTING GROUND PREPARATION REQUIREMENTS.
6. AIR RELEASES ARE CO-LOCATED WITH HYDRANT. AIR RELEASES ARE TO BE PLACED INSIDE HYDRANT BOX. VALVES FOR WATER MAIN AND GLYCOL AIR RELEASE ARE TO BE LOCATED INSIDE HYDRANT BOX.
7. REFER TO SHEET D3 FOR FURTHER DETAILS ON THE FIRE HYDRANT BOX.

1 / D7 TYPICAL END OF LINE FIRE HYDRANT DETAIL
NTS

STATE OF ALASKA 49TH
Chase A. Nelson CE-13867
REGISTERED PROFESSIONAL ENGINEER
10/20/16

DOWL
AECL848
WWW.DOWL.COM
3535 College Road, #100
Fairbanks, Alaska 99709
907-374-0275

INSTITUTIONAL CORRIDOR PIPED WATER SYSTEM
BETHEL, ALASKA
END OF LINE HYDRANT DETAILS

PROJECT 1123.62833.01
DATE 10/18/2016

© DOWL, 2016

SHEET
D7

C:\Civil 3D Projects\23\61833-01\Civil\SA14-CS-DT-61833.dwg PLOT DATE 2016-10-20 11:44 SAVED DATE 2016-10-20 11:16 USER: asetten

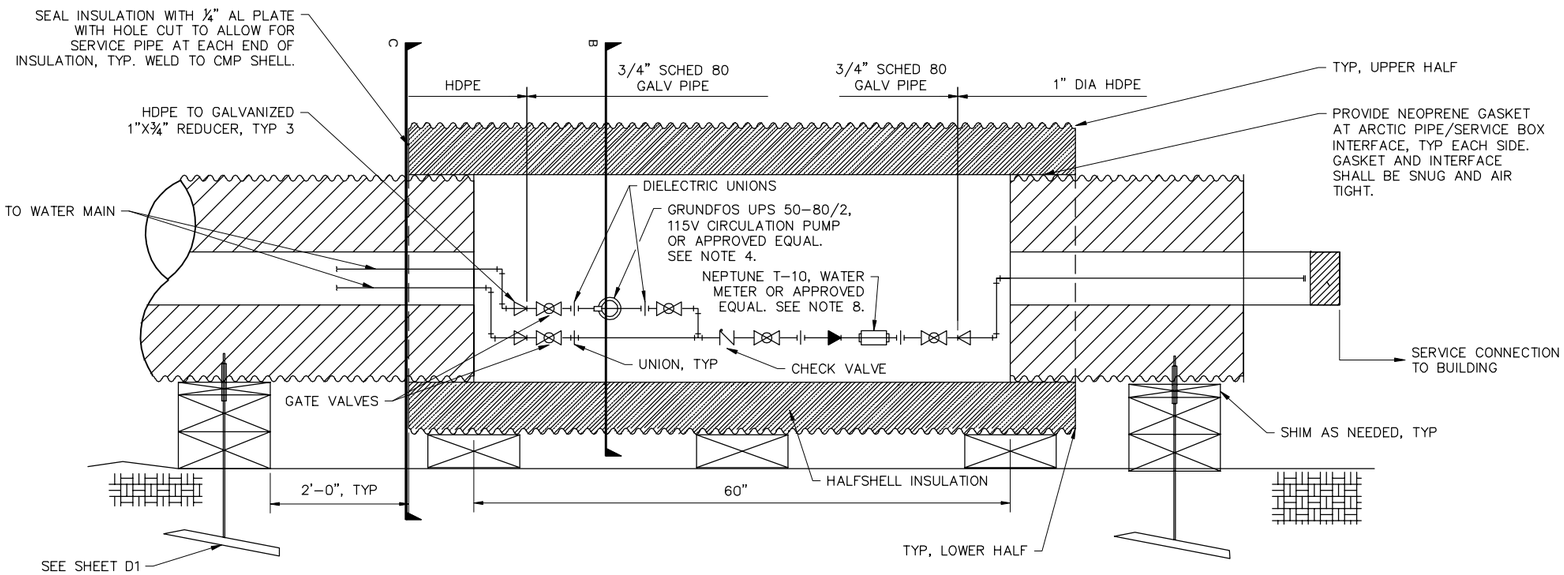

1 / D8 WATER SERVICE BOX ASSEMBLY SECTION A
NTS

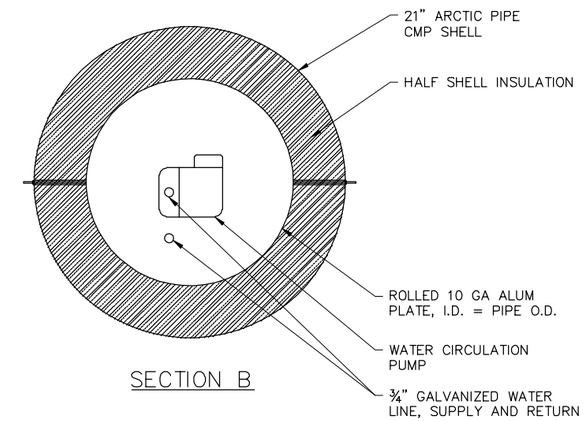

SECTION B

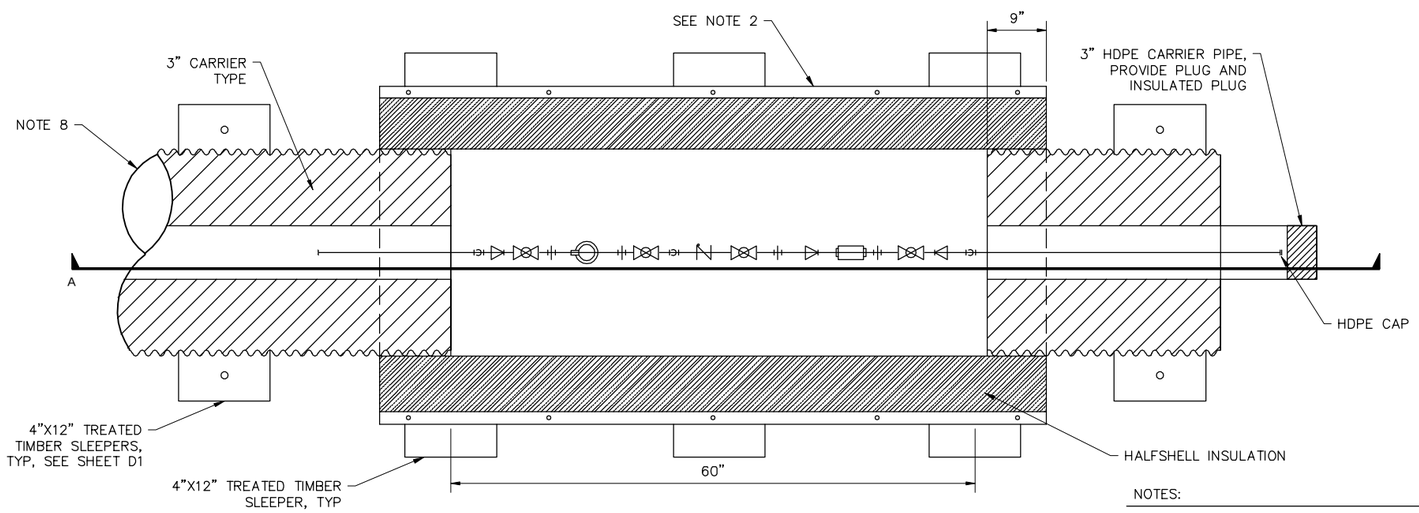

2 / D8 WATER SERVICE BOX ASSEMBLY PLAN
NTS

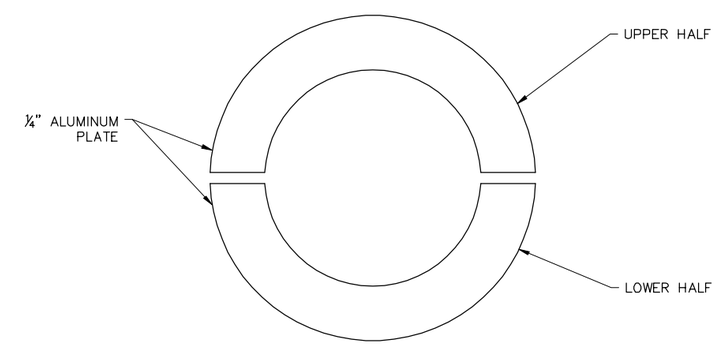

SECTION C

SERVICE PLAN NOTE

IN ACCORDANCE WITH SPECIFICATIONS, CONTRACTOR SHALL SUBMIT A SERVICE PLAN FOR EACH SERVICE. THIS DETAIL IS ONLY TO BE USED FOR INSTANCES WHEN A LOCATION INSIDE THE FACILITY IS UNAVAILABLE FOR INSTALLATION OF CIRCULATION PUMP, WATER METER, VALVES AND BACKFLOW PREVENTER.

HOSPITAL WATER SERVICE NOTE

THE HOSPITAL IS TO BE SERVED BY WATER SERVICE AS SHOWN ON THE PLAN AND PROFILE SHEETS AND SHEET G3. THE SERVICE SHALL BE 4" SUPPLY AND 1" RETURN. THE SERVICE SUPPLY AND RETURN LINES SHALL BE PLACED IN A CARRIER WITH HEAT TRACE AND SHALL MEET THE SPECIFICATIONS. THE SERVICE SHALL BE CONNECTED IN A MANNER THAT ALLOWS FOR THE HOSPITAL TO DRAW FROM AN EXISTING WELL, OR THE CITY WATER MAIN. THE HOSPITAL WATER SERVICE SHALL HAVE AN ENGINEER APPROVED CIRCULATION PUMP, WATER METER, BACKFLOW PREVENTION SYSTEM, AND OTHER APPURTENANCES AS SHOWN IN DETAIL 1/D8 BUT SIZED FOR HOSPITAL SERVICE. SERVICE APPURTENANCES SHALL BE PLACED INSIDE THE FACILITY, AND BE IN ACCORDANCE WITH THE ENGINEER, OWNER, AND SERVICE OWNER APPROVED SERVICE PLAN.

NOTES:

1. CONTRACTOR SHALL PROVIDE PIPE SUPPORT FOR ASSEMBLY AT BOTH ENDS AND THE MIDDLE OF ASSEMBLY. (PROVIDE SHOP DRAWINGS FOR THE ENGINEER).
2. PUMP/METER ASSEMBLY SHALL BE EASILY ACCESSIBLE AND REMOVABLE IN ORDER FOR FUTURE SCHEDULED MAINTENANCE TO BE PERFORMED. MINIMUM 1 FOOT ON CENTER 3/8" SST MACHINE BOLT.
3. 21" DIAMETER ARCTIC PIPE SHALL BE CONNECTED TO 15" SERVICE LINE WITH AN AL CMP PLATE REDUCER.
4. WATER CIRCULATION PUMP ORIENTATION SHALL FOLLOW MANUFACTURER'S REQUIREMENTS. DO NOT MOUNT MOTOR SHAFT IN VERTICAL POSITION.
5. HEAT TRACE SHALL BE PLACED AROUND ALL SERVICE APPURTENANCES AND COME FROM FACILITY. FOR HEAT TRACE, SEE DETAIL 3/D9.
6. WATER SERVICE BOX ASSEMBLY IS TO BE PLACED AS CLOSE TO FACILITY CONNECTION POINT AS POSSIBLE. LOCATION IS TO BE COORDINATED WITH SERVICE OWNER, AND IN ACCORDANCE WITH NOTES ON SHEET G3.
7. DETAIL 1/D8 IS FOR ALL WATER SERVICES EXCEPT SERVICE TO HOSPITAL.
8. WATER METER TO HOSPITAL SHALL HAVE RANGE OF 0-200 GPM. METER SHALL BE NEPTUNE MAKE OR ENGINEER APPROVED EQUIVALENT. HOSPITAL SERVICE SHALL HAVE DUAL CHECK VALVES.

STATE OF ALASKA 49TH
Chase A. Nelson CE-13867 10/20/16
REGISTERED PROFESSIONAL ENGINEER

BETHEL ALASKA

DOWL
AECL848
www.dowl.com
3535 College Road, #100
Fairbanks, Alaska 99709
907-374-0275

INSTITUTIONAL CORRIDOR PIPED WATER SYSTEM
BETHEL, ALASKA
WATER SERVICE BOX ASSEMBLY

PROJECT 1123.62833.01
DATE 10/18/2016

© DOWL 2016

SHEET
D8

C:\Civil 3D Projects\23\61833-01\Civil\SA14-CS-DT-61833.dwg PLOT DATE 2016-10-20 11:44 SAVED DATE 2016-10-20 11:16 USER: asetten

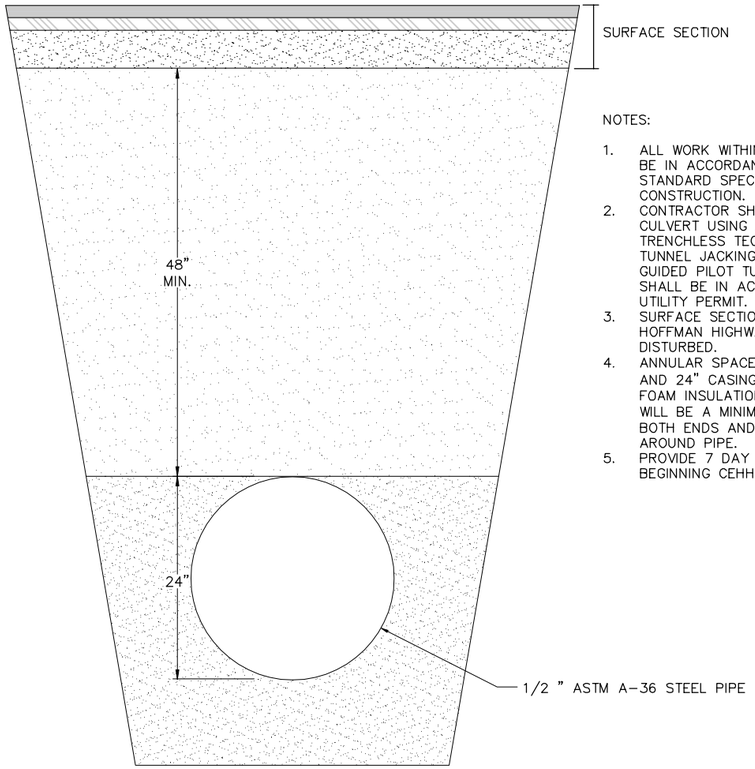

NOTES:

1. ALL WORK WITHIN DOT&PF ROW SHALL BE IN ACCORDANCE WITH DOT&PF STANDARD SPECIFICATIONS FOR HIGHWAY CONSTRUCTION.
2. CONTRACTOR SHALL ONLY INSTALL CULVERT USING AN APPROVED TRENCHLESS TECHNOLOGY, INCLUDING TUNNEL JACKING AND BOXING WITH GUIDED PILOT TUBES. CONSTRUCTION SHALL BE IN ACCORDANCE WITH DOT&PF UTILITY PERMIT.
3. SURFACE SECTION OF THE CHIEF EDDIE HOFFMAN HIGHWAY IS NOT TO BE DISTURBED.
4. ANNULAR SPACE BETWEEN 8" X 20" AIP AND 24" CASING SHALL BE FILLED WITH FOAM INSULATION. FOAM INSULATION WILL BE A MINIMUM OF 6" THICK ON BOTH ENDS AND BE CONTINUOUS ALL AROUND PIPE.
5. PROVIDE 7 DAY NOTICE PRIOR TO BEGINNING CEHH CROSSING.

1 / D9 SECTION FOR CEHH CROSSING
NTS

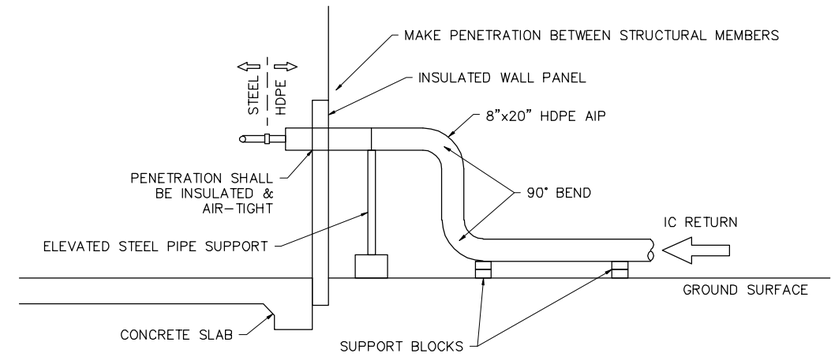

2 / D9 WATER TREATMENT PLANT WALL PENETRATION DETAIL
NTS

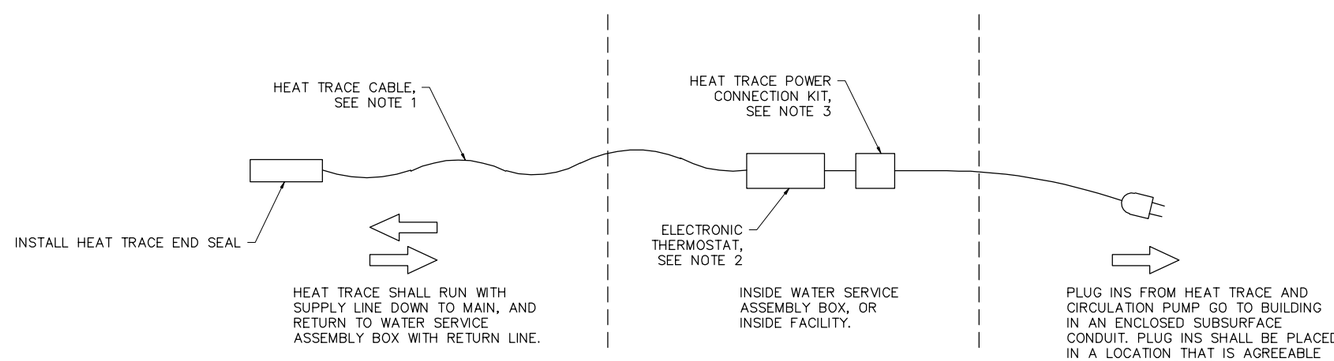

NOTES:

1. HEAT TRACE CABLE – 5W/FT, SELF LIMITING RAYCHEM TYPE 5XC1-CT OR EQUAL
2. ELECTRONIC THERMOSTAT SET AT 35° F, DIGITRACE TYPE EC-TS-10
3. HEAT TRACE POWER CONNECTION KIT, RAYCHEM HTS WINTERGARD #H908 OR EQUAL

3 / D9 HEAT TRACE DETAIL
NTS

STATE OF ALASKA 49TH
Chase A. Nelson
CE-13867
61833.01
10/20/16
REGISTERED PROFESSIONAL ENGINEER

BETHEL ALASKA

DOWL
AECL848
WWW.DOWL.COM
3535 College Road, #100
Fairbanks, Alaska 99709
907-374-0275

INSTITUTIONAL CORRIDOR PIPED WATER SYSTEM
BETHEL, ALASKA
ADDITIONAL DETAILS

PROJECT 1123.62833.01
DATE 10/18/2016

© DOWL 2016

SHEET
D9

C:\Civil 3D Projects\23\61833-01\Civil\SA14-CS-DT-61833.dwg PLOT DATE 2016-10-20 11:45 SAVED DATE 2016-10-20 11:16 USER: asetten

NOTES:
1. NEW PIPING SHOWN IN BOLD ON THIS SHEET.
2. SOME PIPE LENGTHS MAY NEED TO BE FIELD FIT TO ENSURE PROPER INSTALLATION.
3. ALL INSTRUMENTS LOCATED IN UPGRADED PIPING SHALL BE RE-INSTALLED IF THEY ARE FUNCTIONING PROPERLY AND REPLACED IF THEY ARE NOT FUNCTIONING.
4. VICTAULIC (OR EQUAL) PIPING AND FITTINGS SHOULD BE USED TO FACILITATE EASE OF INSTALLATION. PIPING SHALL BE PAINTED TO MATCH EXISTING PIPE.
5. ALL PIPING AT INLET / OUTLET OF EXISTING PUMPS SHALL BE FULLY SUPPORTED AS TO ELIMINATE ANY LOADS ON THE PUMP FLANGES.
6. ONE PIPE SUPPORT NEAR PUMP CP-410 WILL LIKELY REQUIRE RELOCATION. FIELD VERIFY AND RELOCATE IF REQUIRED.

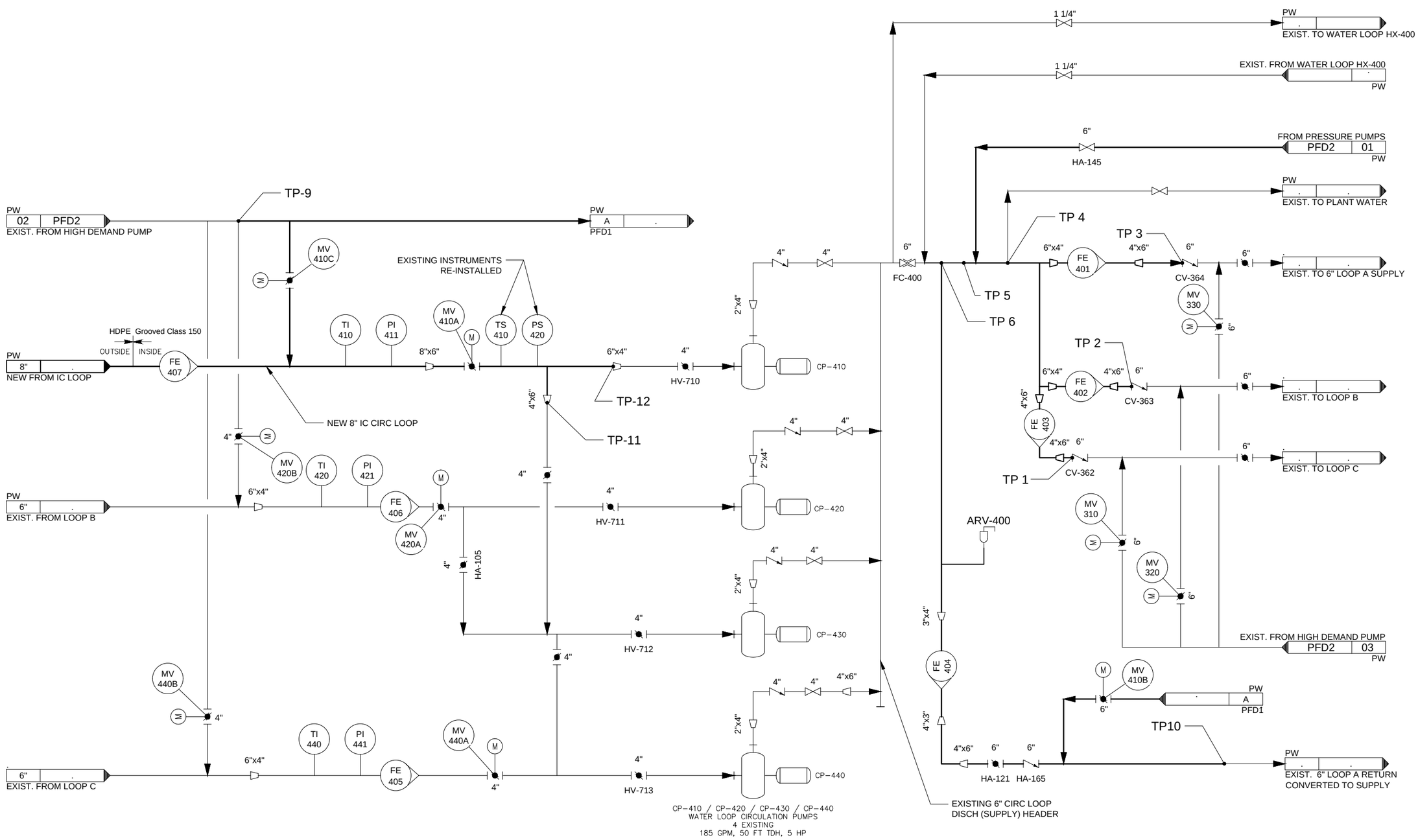

STATE OF ALASKA 49TH STEPHAN A. BRADLEY EC-12444 REGISTERED PROFESSIONAL ENGINEER

BETHEL ALASKA

DOWL
WWW.DOWL.COM
3535 College Road, #100
Fairbanks, Alaska 99709
907-374-0275
AECL848

INSTITUTIONAL CORRIDOR PIPED WATER SYSTEM
BETHEL, ALASKA

POTABLE WATER CIRCULATION LOOP SCHEMATIC
WATER LOOP CIRCULATION PUMPS

PROJECT	61833
DATE	10/07/2016

© DOWL 2016

SHEET
PFD1

Q:\23\61833-01\BETHEL\PID DWG\PFD1.dwg PLOT DATE 2016-10-18 11:55 SAVED DATE 2016-10-17 14:00 USER: dsenden

NOTES:
1. ALL INSTRUMENTS LOCATED IN UPGRADED PIPING SHALL BE RE-INSTALLED IF THEY ARE FUNCTIONING PROPERLY AND REPLACED IF THEY ARE NOT FUNCTIONING.
2. VICTAULIC (OR EQUAL) PIPING AND FITTINGS SHOULD BE USED TO FACILITATE EASE OF INSTALLATION. PIPING SHALL BE PAINTED TO MATCH EXISTING PIPE.
3. ALL PIPING AT INLET / OUTLET OF PUMPS SHALL BE FULLY SUPPORTED AS TO ELIMINATE ANY LOADS ON THE PUMP FLANGES.

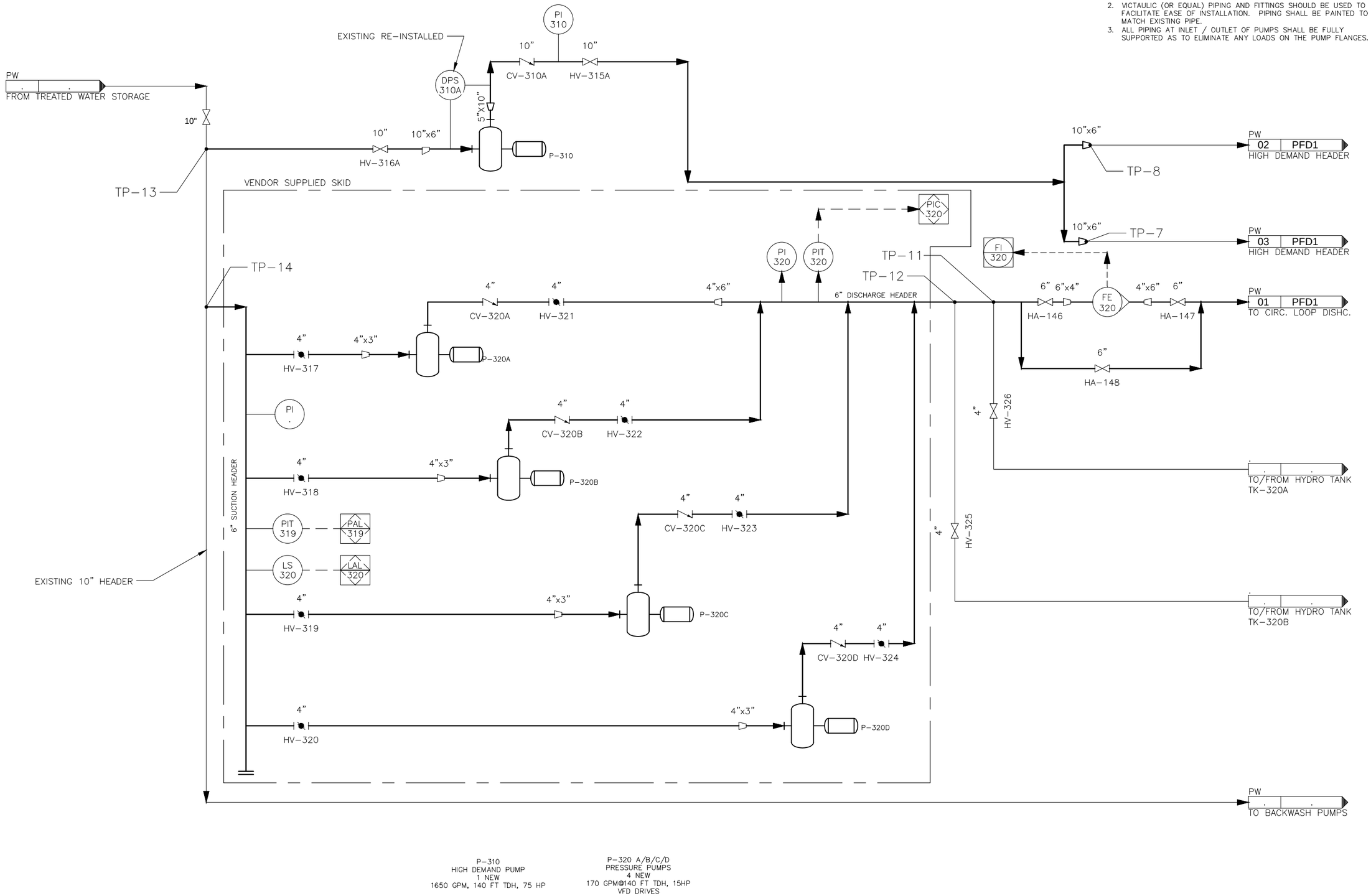

P-310
HIGH DEMAND PUMP
1 NEW
1650 GPM, 140 FT TDH, 75 HP

P-320 A/B/C/D
PRESSURE PUMPS
4 NEW
170 GPM@140 FT TDH, 15HP
VFD DRIVES

STATE OF ALASKA 49TH STEPHAN A. BRADLEY EC-12444 REGISTERED PROFESSIONAL ENGINEER

BETHEL ALASKA

DOWL
WWW.DOWL.COM
3535 College Road, #100
Fairbanks, Alaska 99709
907-374-0275
AECL848

INSTITUTIONAL CORRIDOR PIPED WATER SYSTEM
BETHEL, ALASKA
POTABLE WATER CIRCULATION LOOP SCHEMATIC
PRESSURE AND HIGH DEMAND PUMPS

PROJECT	61833
DATE	10/07/2016

© DOWL 2016

SHEET
PFD2

Q:\23\61833-01\BETHEL\PID DWG\PFD2.dwg PLOT DATE 2016-10-17 13:57 SAVED DATE 2016-10-12 14:22 USER: dsenden

NOTES:
1. THIS SHEET CONTAINS A NEW SYSTEM WITH NO EXISTING PIPING, EQUIPMENT, INSTRUMENTS, OR VALVES.
2. PIPING CONNECTIONS BETWEEN THE EXISTING GLYCOL SUPPLY HEADER (P-540 DISCHARGE) / THE RETURN HEADERS TO THE BOILER AND THE NEW HEAT EXCHANGER WILL REQUIRE FIELD ROUTING.
3. PIPING FROM THE CIRCULATION PUMPS TO THE NEW CIRCULATION LOOP WILL REQUIRE FIELD ROUTING.
4. VICTAULIC (OR EQUAL) PIPING AND FITTINGS SHOULD BE USED TO FACILITATE EASE OF INSTALLATION. PIPING SHALL BE PAINTED TO MATCH EXISTING PIPE.
5. TK-570 IS A NEW EXPANSION TANK AND SHALL BE AMTROL EXTROL MODEL 90.
6. FROM NEW TIE POINT AT GLYCOL FILL PUMP DISCHARGE (NOT SHOWN ON THESE DRAWINGS)..
7. SET PRESSURE SWITCH TO TRIP BOTH P-570 PUMPS AT OR ABOVE 95 PSIG.
8. SET TEMPERATURE SWITCH TO TRIP BOTH P-570 PUMPS AT OR ABOVE 125°F.
9. NORMALLY CLOSED. VALVE USED FOR START-UP WHEN GLYCOL IS COLD.

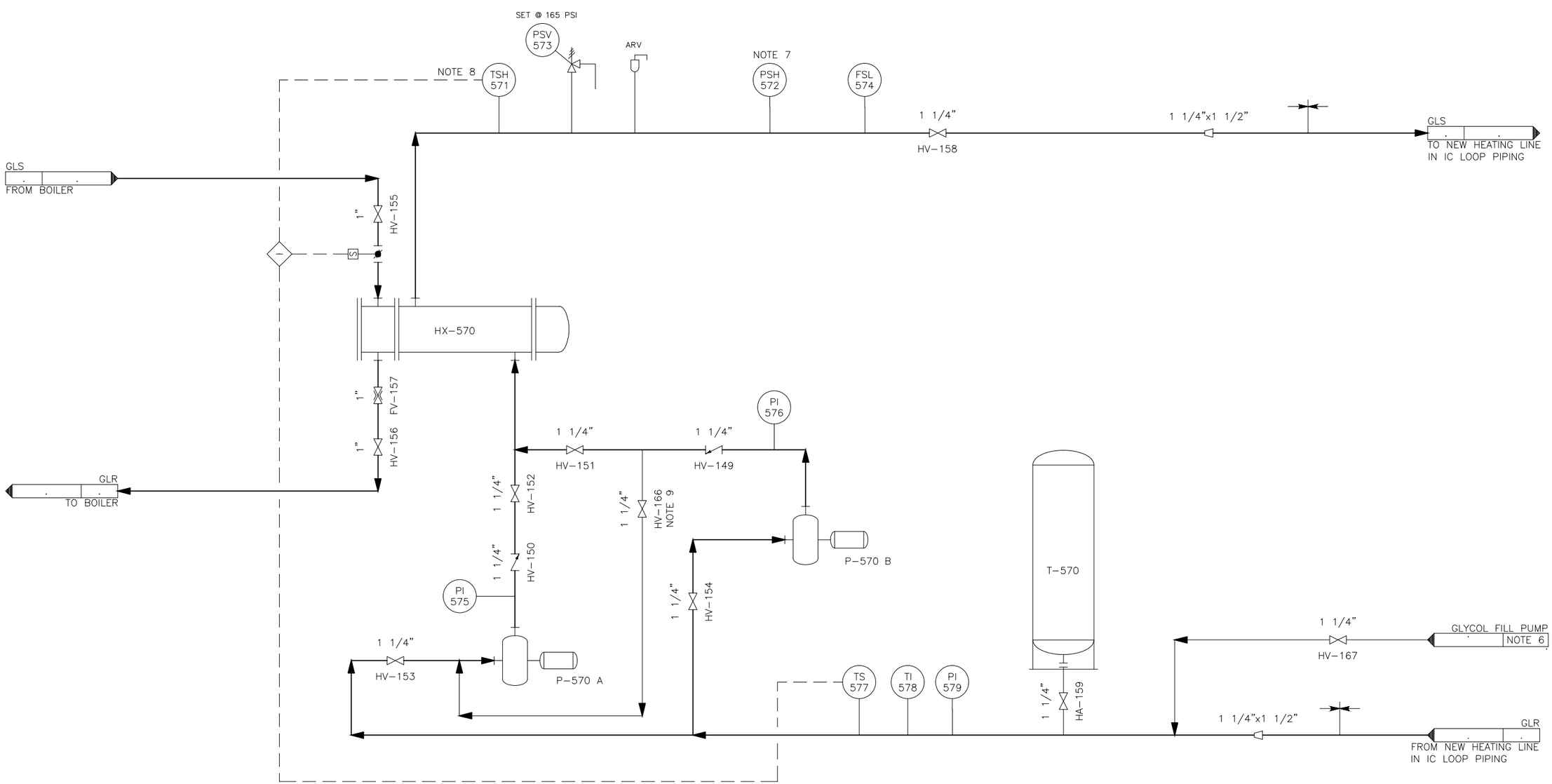

P-570 A/B
IC GLYCOL LOOP CIRCULATION PUMPS
2 NEW
10 GPM, 225 FT TDH, 2 HP

STATE OF ALASKA 49TH STEPHAN A. BRADLEY EC-12444 REGISTERED PROFESSIONAL ENGINEER

BETHEL ALASKA

DOWL
WWW.DOWL.COM
3535 College Road, #100
Fairbanks, Alaska 99709
907-374-0275
AECL848

INSTITUTIONAL CORRIDOR PIPED WATER SYSTEM
BETHEL, ALASKA

GLYCOL CIRCULATION LOOP SCHEMATIC
INSTITUTIONAL CORRIDOR GLYCOL LOOP PUMPS

PROJECT 61833
DATE 10/07/2016

© DOWL 2016

SHEET
PFD3

Q:\23\61833-01\BETHEL\PID DWG\PFD3.dwg PLOT DATE 2016-10-17 13:58 SAVED DATE 2016-10-12 14:22 USER: dsenden

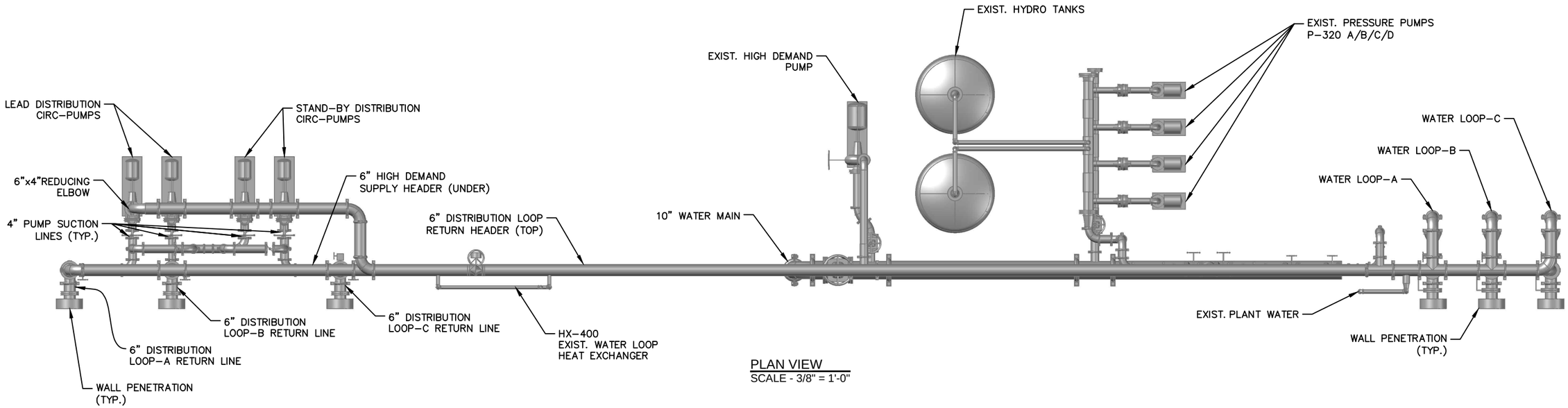

PLAN VIEW
SCALE - 3/8" = 1'-0"

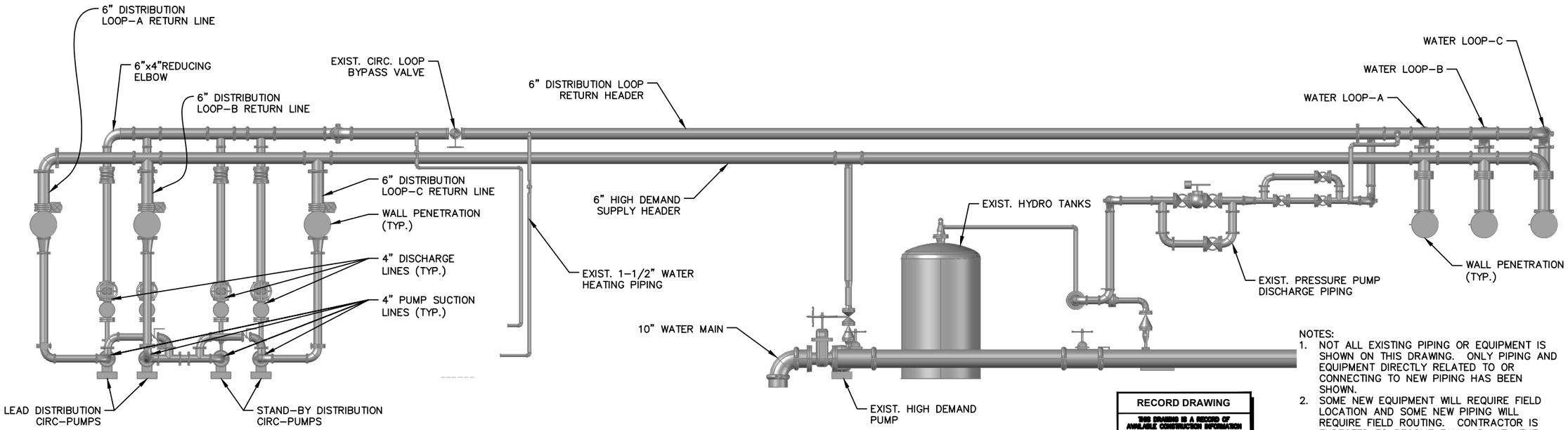

ELEVATION VIEW
SCALE - 3/8" = 1'-0"

NOTES:
1. NOT ALL EXISTING PIPING OR EQUIPMENT IS SHOWN ON THIS DRAWING. ONLY PIPING AND EQUIPMENT DIRECTLY RELATED TO OR CONNECTING TO NEW PIPING HAS BEEN SHOWN.
2. SOME NEW EQUIPMENT WILL REQUIRE FIELD LOCATION AND SOME NEW PIPING WILL REQUIRE FIELD ROUTING. CONTRACTOR IS EXPECTED TO BECOME FAMILIAR WITH THE SITE PRIOR TO BIDDING..

RECORD DRAWING

THIS DRAWING IS A RECORD OF AVAILABLE CONSTRUCTION INFORMATION AND DOES NOT IMPLY OR WARRANT THAT THE FACILITIES SHOWN ARE "AS BUILT"

SOURCE OF INFORMATION:
DRAWINGS REVISED BY:
REVIEWED BY:
DATE:

STATE OF ALASKA 49TH
STEPHAN A. BRADLEY
EC-12444
REGISTERED PROFESSIONAL ENGINEER

DOWL
WWW.DOWL.COM
3535 College Road, #100
Fairbanks, Alaska 99709
907-374-0275
AECL848

INSTITUTIONAL CORRIDOR PIPED WATER SYSTEM
BETHEL, ALASKA

POTABLE WATER CIRCULATION LOOP
EXISTING PIPING - CIRCULATION HEADER

PROJECT	61833
DATE	10/07/2016

© DOWL, 2016

SHEET
ME01

Q:\23\61833-01\BETHEL\Plant 3D Models\BETHEL_EXISTING.dwg PLOT DATE 2016-10-18 14:04 SAVED DATE 2016-10-17 14:54 USER: dsenden

ELEVATION VIEW
SCALE - 3/8" = 1'-0"

ELEVATION VIEW
SCALE - 3/8" = 1'-0"

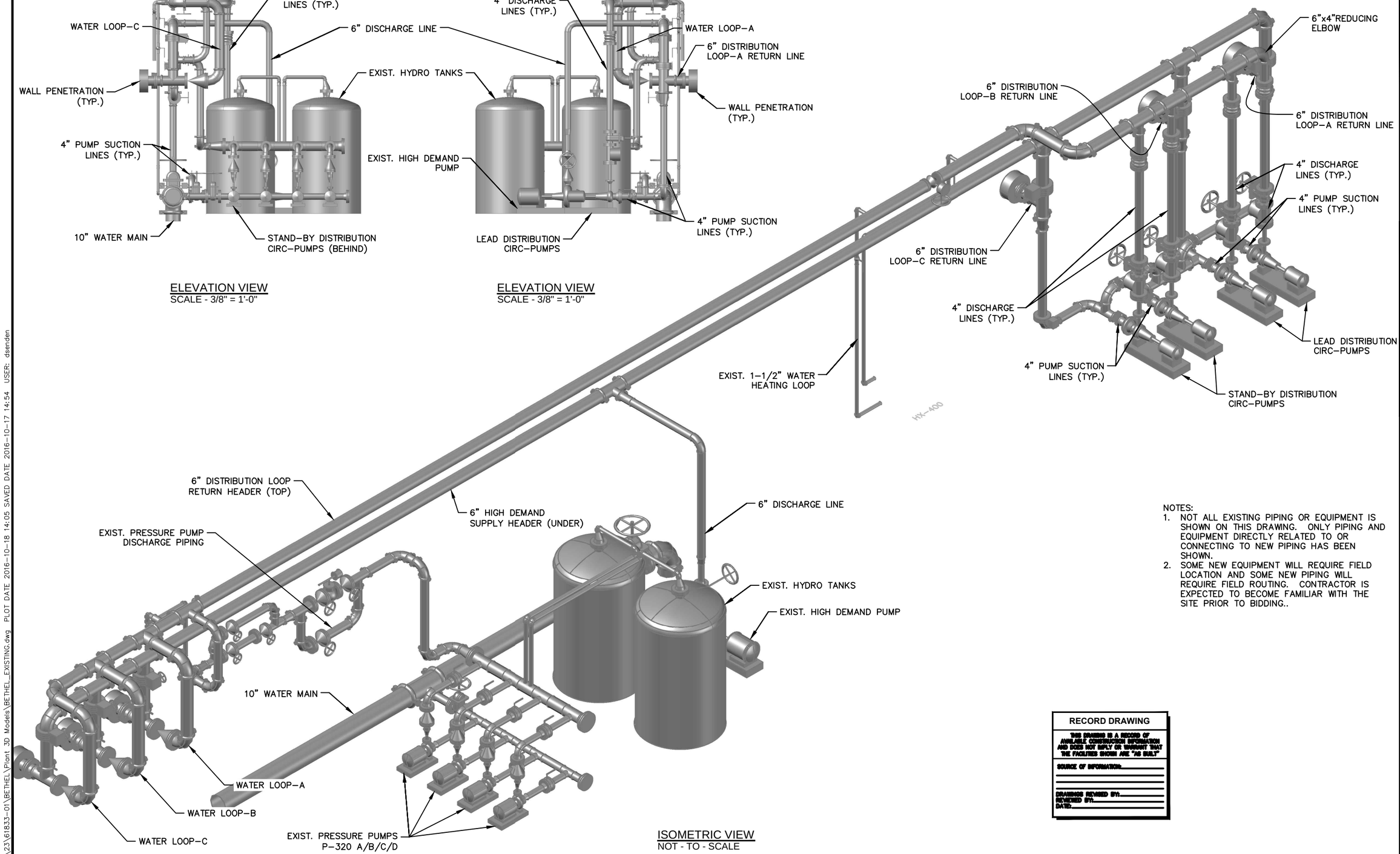

ISOMETRIC VIEW
NOT - TO - SCALE

NOTES:
1. NOT ALL EXISTING PIPING OR EQUIPMENT IS SHOWN ON THIS DRAWING. ONLY PIPING AND EQUIPMENT DIRECTLY RELATED TO OR CONNECTING TO NEW PIPING HAS BEEN SHOWN.
2. SOME NEW EQUIPMENT WILL REQUIRE FIELD LOCATION AND SOME NEW PIPING WILL REQUIRE FIELD ROUTING. CONTRACTOR IS EXPECTED TO BECOME FAMILIAR WITH THE SITE PRIOR TO BIDDING..

RECORD DRAWING

THIS DRAWING IS A RECORD OF AVAILABLE CONSTRUCTION INFORMATION AND DOES NOT IMPLY OR WARRANT THAT THE FACILITIES SHOWN ARE "AS BUILT"

SOURCE OF INFORMATION:

DRAWINGS REVISED BY:
REVIEWED BY:
DATED:

STATE OF ALASKA 49TH
STEPHAN A. BRADLEY
EC–12444
REGISTERED PROFESSIONAL ENGINEER

BETHEL ALASKA

DOWL
WWW.DOWL.COM
3535 College Road, #100
Fairbanks, Alaska 99709
907-374-0275
AECL848

INSTITUTIONAL CORRIDOR PIPED WATER SYSTEM
BETHEL, ALASKA

POTABLE WATER CIRCULATION LOOP
EXISTING PIPING - CIRC & HIGH DEMAND PUMPS

PROJECT 61833
DATE 10/07/2016

© DOWL 2016

SHEET
ME02

Q:\23\61833-01\BETHEL\Plant 3D Models\BETHEL_EXISTING.dwg PLOT DATE 2016-10-18 14:05 SAVED DATE 2016-10-17 14:54 USER: dsenden

NOTES:
1. SOME FIELD ROUTING OF PIPING MAY BE REQUIRED. AS-BUILT INFORMATION WAS LIMITED OR NOT FULLY UPDATED.
2. ALL INSTRUMENTS LOCATED IN UPGRADED PIPING SHALL BE RE-INSTALLED IF THEY ARE FUNCTIONING PROPERLY AND REPLACED IF THEY ARE NOT FUNCTIONING.
3. VICTAULIC (OR EQUAL) PIPING AND FITTINGS SHOULD BE USED TO FACILITATE EASE OF INSTALLATION. PIPING SHALL BE PAINTED TO MATCH EXISTING PIPE.
4. ALL PIPING AT INLET / OUTLET OF EXISTING PUMPS SHALL BE FULLY SUPPORTED AS TO ELIMINATE ANY LOADS ON THE PUMP FLANGES.
5. PIPE SUPPORT NEAR CP-410 SUCTION PIPING MAY REQUIRE MODIFICATION TO FACILITATE INSTALLATION OF NEW PIPING.

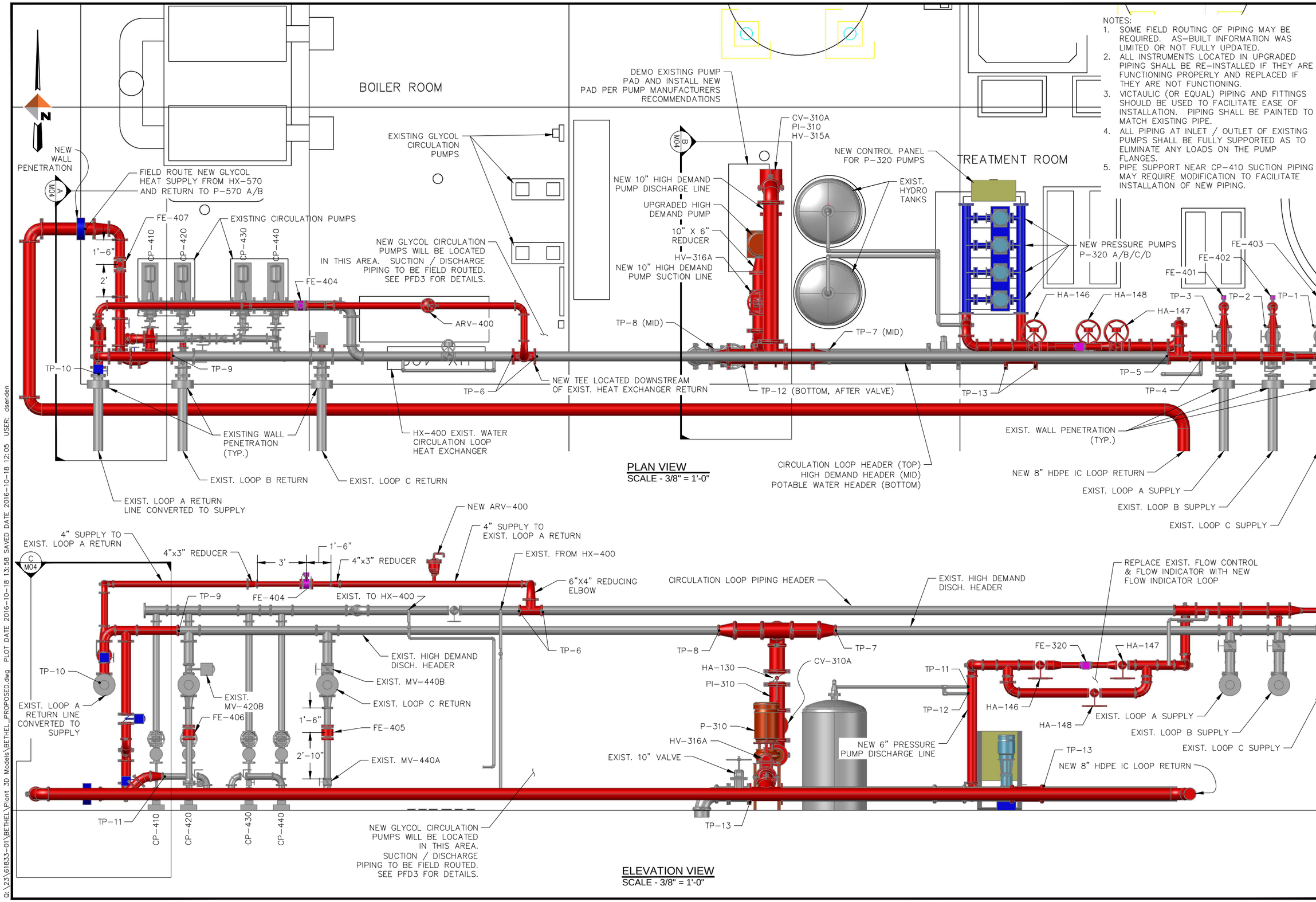

STATE OF ALASKA 49TH STEPHAN A. BRADLEY EC-12444 REGISTERED PROFESSIONAL ENGINEER

BETHEL ALASKA

DOWL
WWW.DOWL.COM
3535 College Road, #100
Fairbanks, Alaska 99709
907-374-0275
AECL848

INSTITUTIONAL CORRIDOR PIPED WATER SYSTEM
BETHEL, ALASKA

POTABLE WATER CIRCULATION LOOP
PROPOSED PIPING - CIRCULATION HEADER

PROJECT	61833
DATE	10/07/2016

© DOWL 2016

SHEET
M01

Q:\23\61833-01\BETHEL\Plant 3D Models\BETHEL_PROPOSED.dwg PLOT DATE 2016-10-18 13:58 SAVED DATE 2016-10-18 12:05 USER: dsenden

NOTES:
1. SOME FIELD ROUTING OF PIPING MAY BE REQUIRED. AS-BUILT INFORMATION WAS LIMITED OR NOT FULLY UPDATED.
2. ALL INSTRUMENTS LOCATED IN UPGRADED PIPING SHALL BE RE-INSTALLED IF THEY ARE FUNCTIONING PROPERLY AND REPLACED IF THEY ARE NOT FUNCTIONING.
3. VICTAULIC (OR EQUAL) PIPING AND FITTINGS SHOULD BE USED TO FACILITATE EASE OF INSTALLATION. PIPING SHALL BE PAINTED TO MATCH EXISTING PIPE.
4. ALL PIPING AT INLET / OUTLET OF EXISTING PUMPS SHALL BE FULLY SUPPORTED AS TO ELIMINATE ANY LOADS ON THE PUMP FLANGES.

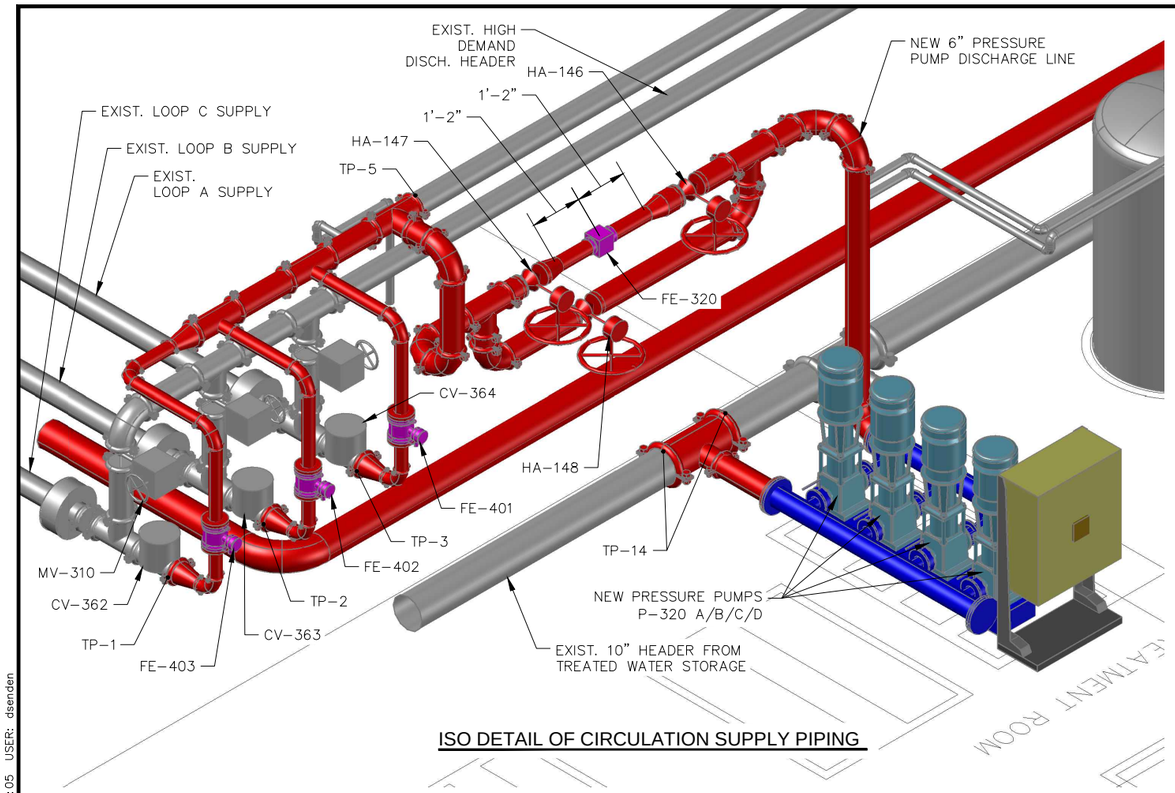

ISO DETAIL OF CIRCULATION SUPPLY PIPING

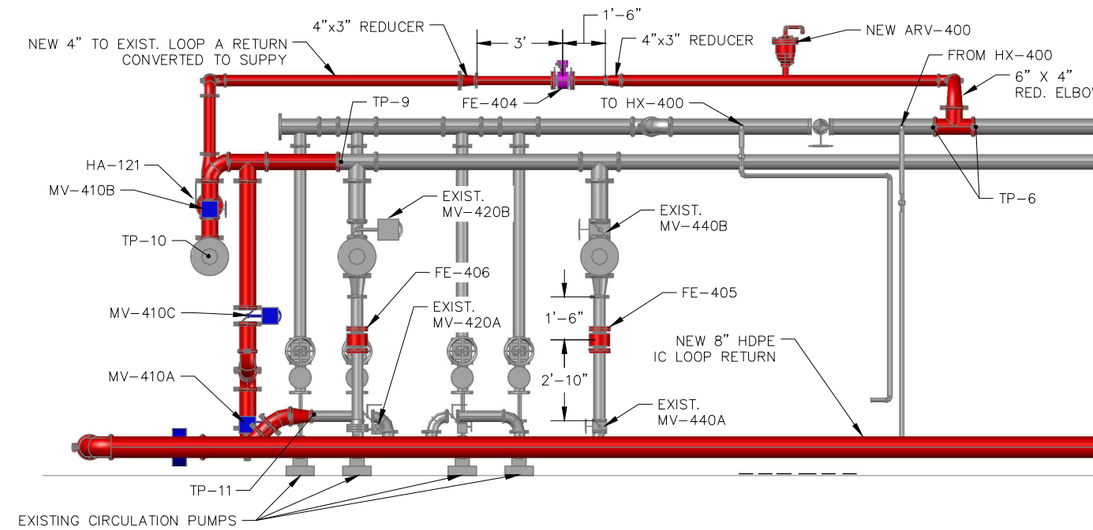

ELEVATION VIEW - CIRC PUMPS LOOKING NORTH
SCALE - 3/8" = 1'-0"

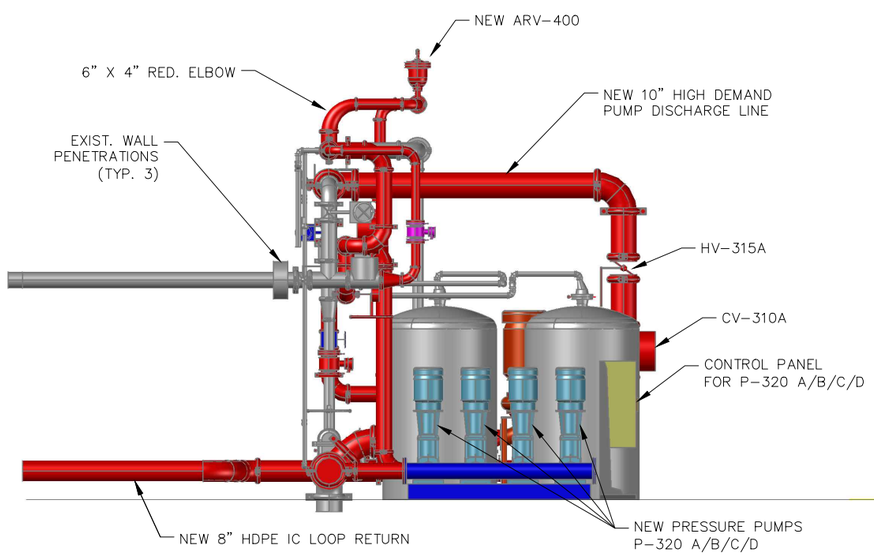

ELEVATION VIEW - LOOKING WEST
SCALE - 3/8" = 1'-0"

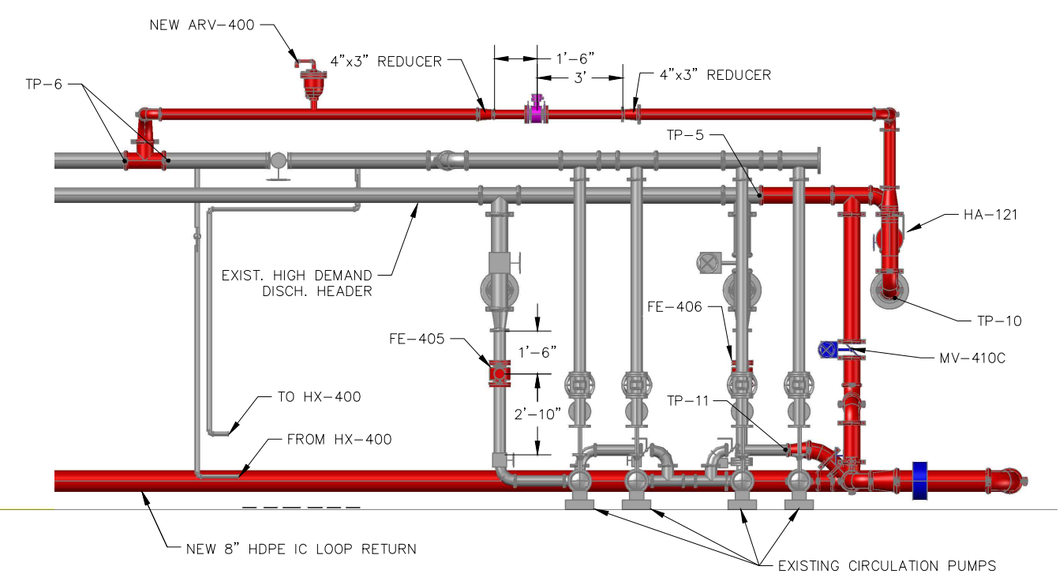

ELEVATION VIEW - CIRC PUMPS LOOKING SOUTH
SCALE - 3/8" = 1'-0"

STATE OF ALASKA 49TH STEPHAN A. BRADLEY EC-12444 REGISTERED PROFESSIONAL ENGINEER

BETHEL ALASKA

DOWL
AECL848
WWW.DOWL.COM
3535 College Road, #100
Fairbanks, Alaska 99709
907-374-0275

INSTITUTIONAL CORRIDOR PIPED WATER SYSTEM
BETHEL, ALASKA
POTABLE WATER CIRCULATION LOOP
PROPOSED PIPING - CIRCULATION HEADER DETAILS

PROJECT	61833
DATE	10/07/2016

© DOWL 2016

SHEET
M02

Q:\23\61833-01\BETHEL\Plant 3D Models\BETHEL_PROPOSED.dwg PLOT DATE 2016-10-18 13:58 SAVED DATE 2016-10-18 12:05 USER: dsenden

NOTES:
1. SOME FIELD ROUTING OF PIPING MAY BE REQUIRED. AS-BUILT INFORMATION WAS LIMITED OR NOT FULLY UPDATED.
2. ALL INSTRUMENTS LOCATED IN UPGRADED PIPING SHALL BE RE-INSTALLED IF THEY ARE FUNCTIONING PROPERLY AND REPLACED IF THEY ARE NOT FUNCTIONING.
3. VICTAULIC (OR EQUAL) PIPING AND FITTINGS SHOULD BE USED TO FACILITATE EASE OF INSTALLATION. PIPING SHALL BE PAINTED TO MATCH EXISTING PIPE.
4. ALL PIPING AT INLET / OUTLET OF EXISTING PUMPS SHALL BE FULLY SUPPORTED AS TO ELIMINATE ANY LOADS ON THE PUMP FLANGES.

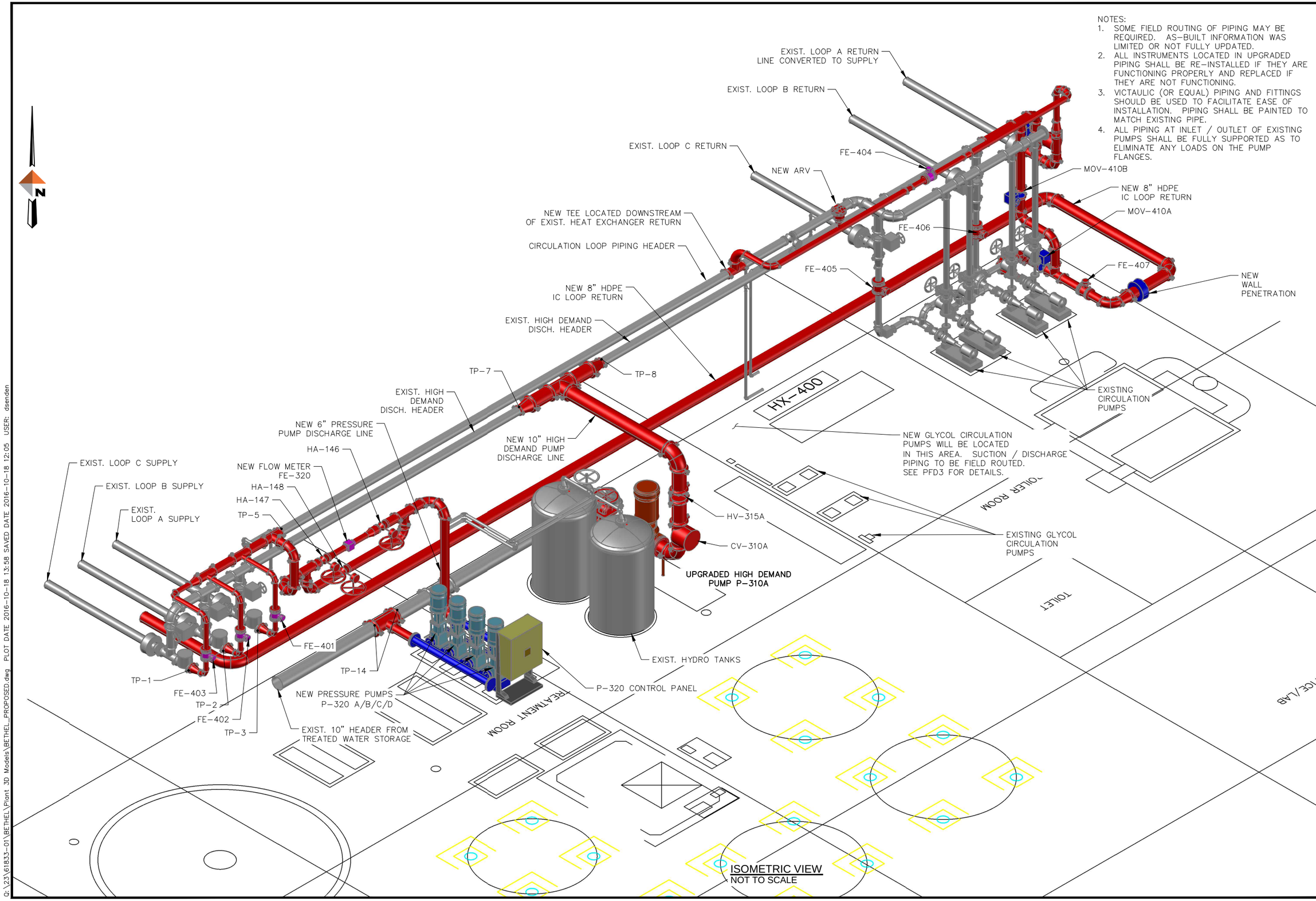

ISOMETRIC VIEW
NOT TO SCALE

STATE OF ALASKA 49TH STEPHAN A. BRADLEY EC-12444 REGISTERED PROFESSIONAL ENGINEER

BETHEL ALASKA

DOWL AECL848
WWW.DOWL.COM
3535 College Road, #100
Fairbanks, Alaska 99709
907-374-0275

INSTITUTIONAL CORRIDOR PIPED WATER SYSTEM
BETHEL, ALASKA
POTABLE WATER CIRCULATION LOOP
PROPOSED CIRC & HIGH DEMAND PUMP PIPING ISO

PROJECT	61833
DATE	10/07/2016

© DOWL 2016

SHEET
M03

Q:\23\61833-01\BETHEL\Plant 3D Models\BETHEL_PROPOSED.dwg PLOT DATE 2016-10-18 13:58 SAVED DATE 2016-10-18 12:05 USER: dsenden

NOTES:
1. SOME FIELD ROUTING OF PIPING MAY BE REQUIRED. AS-BUILT INFORMATION WAS LIMITED OR NOT FULLY UPDATED.
2. ALL INSTRUMENTS LOCATED IN UPGRADED PIPING SHALL BE RE-INSTALLED IF THEY ARE FUNCTIONING PROPERLY AND REPLACED IF THEY ARE NOT FUNCTIONING.
3. VICTAULIC (OR EQUAL) PIPING AND FITTINGS SHOULD BE USED TO FACILITATE EASE OF INSTALLATION. PIPING SHALL BE PAINTED TO MATCH EXISTING PIPE.
4. ALL PIPING AT INLET / OUTLET OF EXISTING PUMPS SHALL BE FULLY SUPPORTED AS TO ELIMINATE ANY LOADS ON THE PUMP FLANGES.

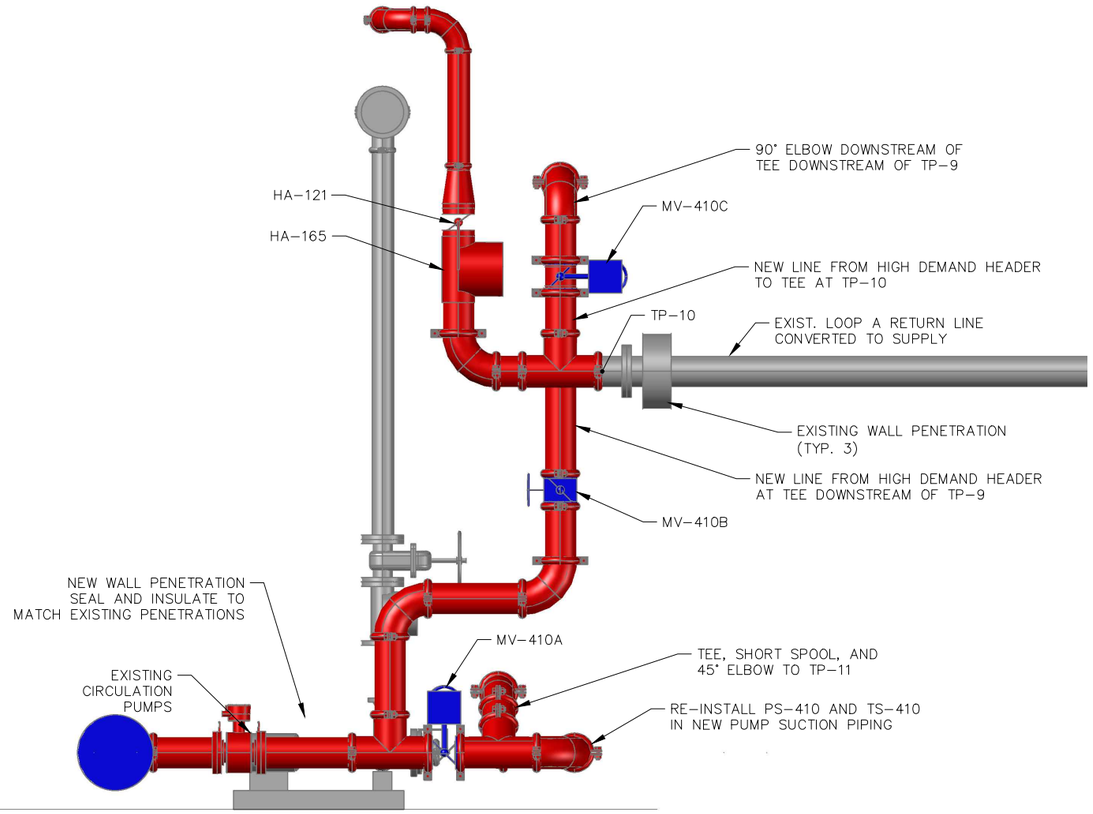

DETAIL A - NEW PIPING AT CP-410, ELEV.
SCALE - 3/4" = 1'-0"

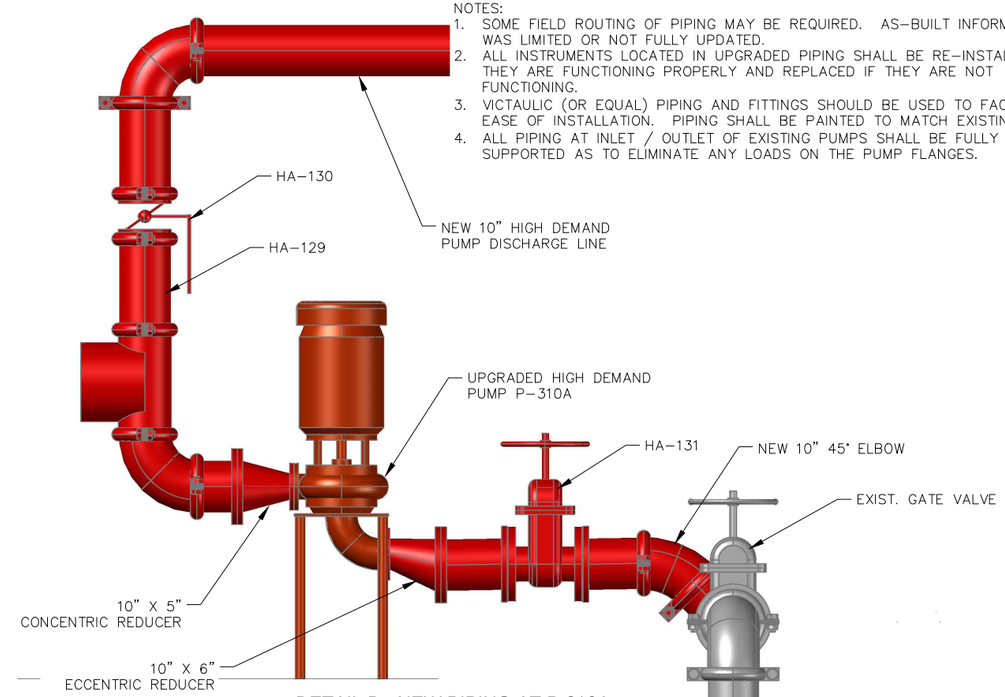

DETAIL B - NEW PIPING AT P-310A
SCALE - 3/4" = 1'-0"

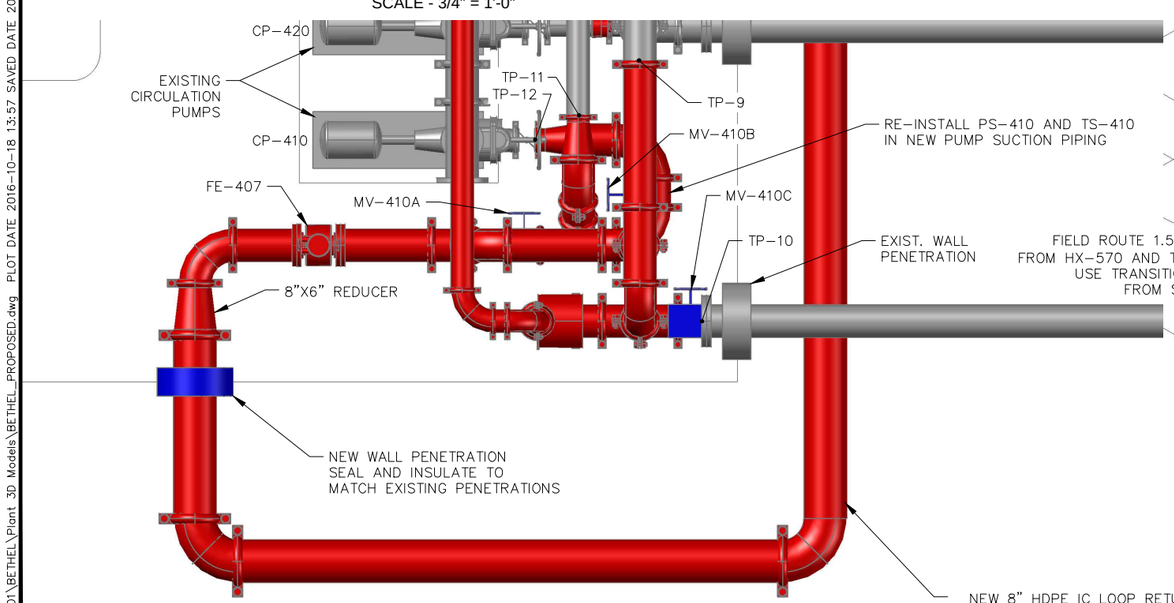

DETAIL C - NEW PIPING AT CP-401, PLAN
SCALE - 3/4" = 1'-0"

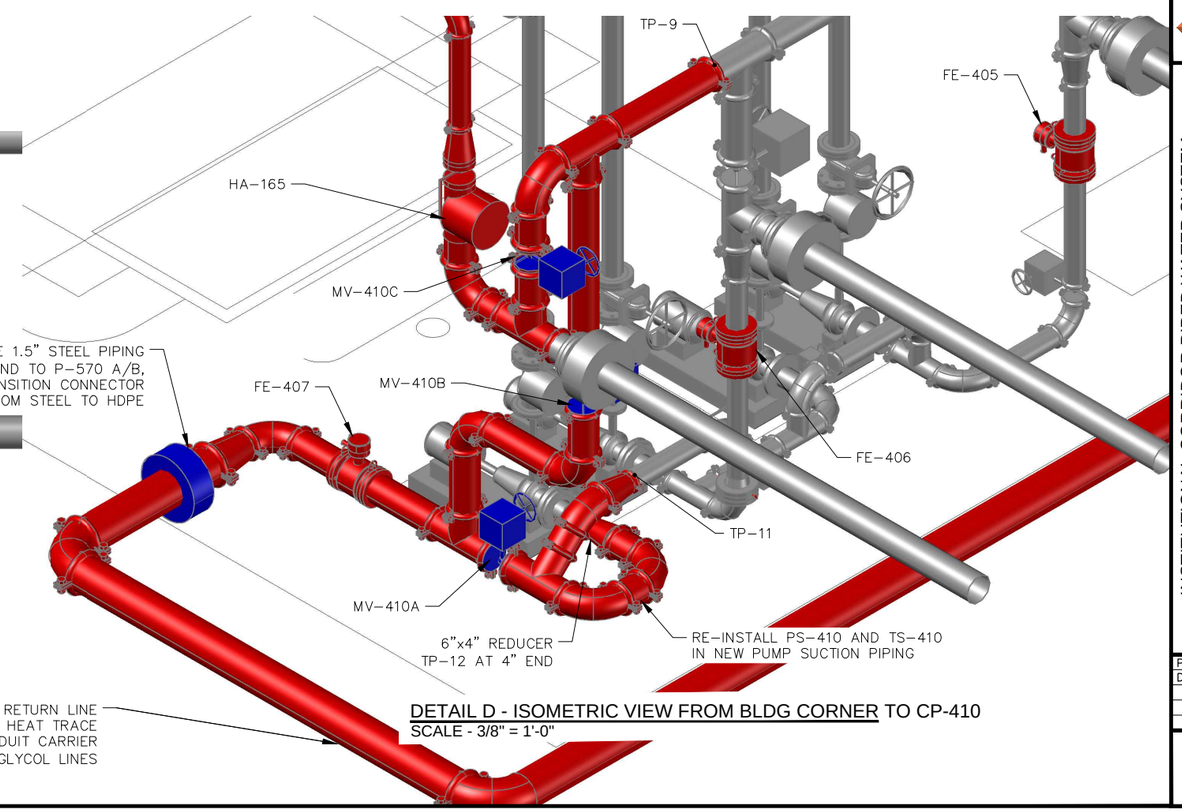

DETAIL D - ISOMETRIC VIEW FROM BLDG CORNER TO CP-410
SCALE - 3/8" = 1'-0"

STATE OF ALASKA 49TH STEPHAN A. BRADLEY EC-12444 REGISTERED PROFESSIONAL ENGINEER

BETHEL ALASKA

DOWL
WWW.DOWL.COM
3535 College Road, #100
Fairbanks, Alaska 99709
907-374-0275
AECL848

INSTITUTIONAL CORRIDOR PIPED WATER SYSTEM
BETHEL, ALASKA
POTABLE WATER CIRCULATION LOOP
PROPOSED PIPING - CIRCULATION HEADER DETAILS

PROJECT	61833
DATE	10/07/2016

© DOWL 2016

SHEET
M04

Q:\23\61833-01\BETHEL\Plant 3D Models\BETHEL_PROPOSED.dwg PLOT DATE 2016-10-18 13:57 SAVED DATE 2016-10-18 12:05 USER: dsenden

ELECTRICAL LEGEND

SYMBOL	DESCRIPTION
	EXPOSED CONDUIT
	UNDERGROUND CONDUIT
	CONDUIT RUN – CHANGE IN ELEVATION
	LIQUID–TIGHT FLEXIBLE METALLIC CONDUIT
	HOME RUN
	KILOWATT–HOUR METER
	PANELBOARD
x/y	MOLDED CASE CIRCUIT BREAKER, X = AMPERE RATING, Y = NO. OF POLES
	MOTOR, 3–PHASE
	MOTOR, SINGLE PHASE
	MOTOR STARTER – COMBINATION
	FUSED DISCONNECT SWITCH
	DISCONNECT SWITCH
$T	MOTOR STARTER – MANUAL
	SIMPLEX RECEPTACLE, NEMA 5–20R
	GROUND FAULT INTERRUPTING (GFI) RECEPTACLE, NEMA 5–20R
	120V DUPLEX RECEPTACLE NEMA 5–20R
T	THERMOSTAT
J	JUNCTION BOX OR FITTING
	HEATER
OTHER SYMBOLS ARE AS DEFINED BY NOTE	

ELECTRICAL ABBREVIATIONS

A	ANALOG SIGNAL, AMPERE
AFF	ABOVE FINISH FLOOR
AFG	ABOVE FINISH GRADE
AI	ANALOG INPUT
AO	ANALOG OUTPUT
BCU	BARE COPPER
C	CONDUIT
CP	CONTROL PANEL
CT	CURRENT TRANSFORMER
CU	COPPER
D	DIGITAL SIGNAL
DEC	DEPARTMENT OF ENVIRONMENTAL CONSERVATION
DEG	DEGREES
DI	DIGITAL INPUT
DO	DIGITAL OUTPUT
E	EMERGENCY
(E)	EXISTING
ETM	ELAPSED TIME METER
FLA	FULL LOAD AMPERES
FS	FLOW SWITCH
G	GROUND CONDUCTOR
GFI	GROUND FAULT INTERRUPTING
GRC	GALVANIZED RIGID (STEEL) CONDUIT
GRD	GROUND
HDPE	HIGH DENSITY POLYETHYLENE CONDUIT
HL	HIGH LEVEL
HP	HORSEPOWER
KVA	KILO–VOLT–AMPERES
LTF	LIQUID TIGHT FLEXIBLE CONDUIT (METALLIC)
MCC	MOTOR CONTROL CENTER
MLO	MAIN LUG ONLY
MOV	MOTOR OPERATED VALVE
(N)	NEW
N.I.C.	NOT IN CONTRACT
NC	NORMALLY CLOSED
NO	NORMALLY OPEN, NUMBER
PE	PROTECTIVE EARTH
PH	PHASE
PLC	PROGRAMMABLE LOGIC CONTROLLER
PM	POWER MONITOR
POE	POWER OVER ETHERNET
PR	PAIR
RVSS	REDUCED VOLTAGE SOFT START
SIG	SIGNAL
SS	STAINLESS STEEL
TWSH	TWISTED WIRE SHIELDED
TYP	TYPICAL
UON	UNLESS OTHERWISE NOTED
V	VOLTS
W	WATTS
WP	WEATHERPROOF
XFMR	TRANSFORMER
ZS	LIMIT SWITCH

GENERAL NOTES

1. ALL ELECTRICAL WORK SHALL BE INSTALLED IN ACCORDANCE WITH ALL REQUIREMENTS OF THE LATEST ADOPTED EDITION OF THE NATIONAL ELECTRIC CODE, STATE, MUNICIPAL, AND FEDERAL LAWS, AMENDMENTS AND/OR ORDINANCES GOVERNING THE PROJECT. ALL WORK SHALL BE PERFORMED UNDER THE SUPERVISION OF A JOURNEYMAN ELECTRICIAN CERTIFIED IN THE STATE OF ALASKA.

2. MATERIALS AND EQUIPMENT SHALL BE COMMERCIAL GRADE AND ACCEPTABLE TO THE AUTHORITY HAVING JURISDICTION AS SUITABLE FOR THE USE INTENDED. ALL ELECTRICAL EQUIPMENT SHALL INCLUDE THE SEAL OF A NATIONALLY RECOGNIZED TESTING LABORATORY FOR THE PURPOSE FOR WHICH IT IS INSTALLED. WHENEVER POSSIBLE, SIMILAR ITEMS SHALL BE SUPPLIED BY THE SAME MANUFACTURER THROUGHOUT THE PROJECT.

3. COORDINATE AND PROVIDE THE EQUIPMENT WITH THE SHORT CIRCUIT CURRENT RATING (SCCR) FOR THE AVAILABLE FAULT CURRENT AT THE POINT OF THE SYSTEM WHERE INSTALLED. PROVIDE ARC–FLASH HAZARD WARNING LABELS ON ALL PANELBOARDS AND SIMILAR EQUIPMENT PER NEC ARTICLE 110.16 AND NFPA 70E.

4. DIMENSIONS OF EQUIPMENT ARE APPROXIMATE. INSTALLATION SHALL BE VERIFIED BASED ON ACTUAL MANUFACTURER'S DATA AND SHOP DRAWINGS.

5. ALL SINGLE PHASE BRANCH CIRCUITS SHALL BE 1/2"C, 3#12, AND ALL THREE PHASE BRANCH CIRCUITS SHALL BE 1/2"C, 4#12, UNLESS OTHERWISE NOTED. ALL CIRCUITS SHALL HAVE EQUIPMENT GROUNDING CONDUCTOR.

6. CONTRACTOR SHALL SUBMIT REQUEST FOR SUBSTITUTION IN WRITING TO THE ENGINEER.

7. PROVIDE SEISMIC SUPPORT AND DESIGN PER IBC REQUIREMENTS.

8. CONTRACTOR SHALL COORDINATE WITH OTHER DISCIPLINES AND PROVIDE SUPPORT IN DISCONNECTION AND CONNECTION OF EQUIPMENT REQUIRED FOR COMPLETION OF THE WORK, WHETHER OR NOT SPECIFICALLY SHOWN HEREIN.

INSTRUMENT IDENTIFIER

XX / YY

XX = FUNCTION / YY = LOOP

AE	ANALYZER ELEMENT
AI	ALARM INDICATOR
AIT	ANALYZING INDICATING TRANSMITTER
AL	ALARM LIGHT
CL	CLOSED (FULLY)
DPS	DIFFERENTIAL PRESSURE SWITCH
E(x)A	VOLTAGE ALARM (X = AC OR DC)
ECA	EMERGENCY POWER AVAILABLE/UPS FAULT
EDCC	BATTERY SYSTEM TEST
EDCT	DC SYSTEM VOLTAGE
ESD	EMERGENCY SHUTDOWN
FE	FLOW ELEMENT
FIT	FLOW INDICATING TRANSMITTER
FSL	FLOW SWITCH LOW
HOA	HAND–OFF–AUTO
HS	HAND SWITCH
LAL	LEVEL ALARM LOW
LAH	LEVEL ALARM HIGH
LCS	LOCAL CONTROL STATION
LEL	LOWER EXPLOSIVE LIMIT
LI	LEVEL INDICATOR
LS	LEVEL SWITCH
LSH	LEVEL SWITCH HIGH
LSHH	LEVEL SWITCH HIGH HIGH
LSL	LEVEL SWITCH LOW
LSLL	LEVEL SWITCH LOW LOW
LT	LEVEL TRANSMITTER
NC	NORMALLY CLOSED
NO	NORMALLY OPEN
OIT	OPERATOR INTERFACE TERMINAL
O/O	ON/OFF
PIT	PRESSURE INDICATING TRANSMITTER
PSH	PRESSURE SWITCH HIGH
RC	RUN COMMAND
RL	RUN LIGHT
TE	TEMPERATURE ELEMENT
TS	TEMPERATURE SWITCH
TSH	TEMPERATURE SWITCH HIGH
TT	TEMPERATURE TRANSMITTER
YA	FAULT INDICATION
YAL	PILOT LAMP
YC	RUN REQUEST
YCO	SOLENOID VALVE OPEN REQUEST
YL	RUN STATUS
ZS	INTRUSION/POSITION SWITCH
ZSC	LIMIT SWITCH, CLOSED
ZSO	LIMIT SWITCH, OPEN

INSTRUMENTATION LEGEND

XX / YY	FIELD MOUNTED INSTRUMENT XX = FUNCTION; YY = TAG NO.
XX / YY	PANEL MOUNTED INSTRUMENT XX = FUNCTION; YY = TAG NO.
XX / YY	MCC MOUNTED INSTRUMENT XX = FUNCTION; YY = TAG NO.
XX / YY	PLC FUNCTION XX = FUNCTION; YY = TAG NO.
XX	PLC CONTROL PANEL XX = CONTROL PANEL NAME / TAG NO.
XX / YY	FIELD MOUNTED INSTRUMENT LIGHT XX = FUNCTION; YY = TAG NO.
XX / YY	PANEL MOUNTED INSTRUMENT LIGHT XX = FUNCTION; YY = TAG NO.

CIRCUIT LEGEND

A–1,a GROUP OR EQUIPMENT IDENTIFICATION.
"A" DENOTES PANEL NAME
"1" DENOTES CIRCUIT NUMBER
"a" DENOTES SWITCH LEG AS INDICATED.

$3,a SWITCH IDENTIFICATION.
"3" DENOTES SWITCH CONFIGURATION
"a" DENOTES SWITCH LEG AS INDICATED.

STATE OF ALASKA 49TH John A. Pepe EE 12053 REGISTERED PROFESSIONAL ENGINEER 10/19/16

EDC, INC.
213 W. FIREWEED LANE
ANCHORAGE, AK 99503
(907) 276-7933
LICENSE NO. AECC705

BETHEL ALASKA

DOWL
WWW.DOWL.COM
AECL848
3535 College Road, #100
Fairbanks, Alaska 99709
907-374-0275

INSTITUTIONAL CORRIDOR PIPED WATER SYSTEM
BETHEL, ALASKA

ELECTRICAL LEGEND, ABBREVIATIONS AND GENERAL NOTES

PROJECT	61833
DATE	10/19/2016

© DOWL 2016

SHEET
E1

p:\Projects\DOWL\bethel ic piped water system\Dwgs\Elec\E1 ELECTRICAL LEGEND, ABBREVIATIONS AND GENERAL NOTES.dwg
PLOT DATE 2016-10-19 10:16 SAVED DATE 2016-10-19 08:30

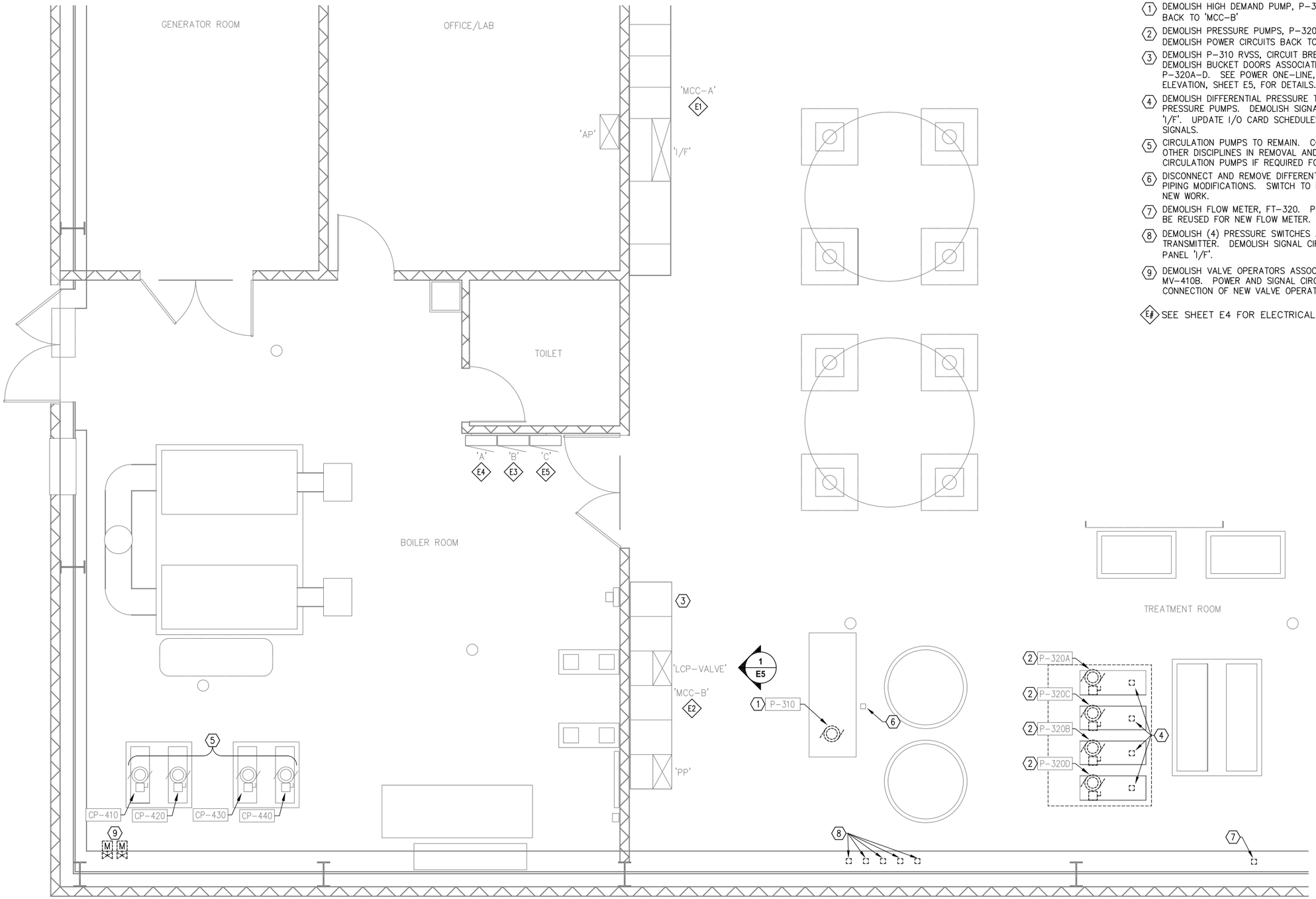

1 / E2 **ELECTRICAL POWER AND SIGNAL DEMOLITION PLAN**

SCALE: 3/8" = 1'-0"

0' 2' 4'

N

SHEET NOTES

1. DEMOLISH HIGH DEMAND PUMP, P-310. DEMOLISH POWER CIRCUIT BACK TO 'MCC-B'
2. DEMOLISH PRESSURE PUMPS, P-320A THROUGH P-320D. DEMOLISH POWER CIRCUITS BACK TO 'MCC-B'.
3. DEMOLISH P-310 RVSS, CIRCUIT BREAKER AND ANCILLARY DEVICES. DEMOLISH BUCKET DOORS ASSOCIATED WITH PRESSURE PUMPS P-320A-D. SEE POWER ONE-LINE, SHEET E4, AND MCC ELEVATION, SHEET E5, FOR DETAILS.
4. DEMOLISH DIFFERENTIAL PRESSURE TRANSMITTERS ASSOCIATED WITH PRESSURE PUMPS. DEMOLISH SIGNAL CIRCUITS BACK TO PANEL 'I/F'. UPDATE I/O CARD SCHEDULES TO REFLECT REMOVED SIGNALS.
5. CIRCULATION PUMPS TO REMAIN. CONTRACTOR SHALL SUPPORT OTHER DISCIPLINES IN REMOVAL AND REINSTALLATION OF CIRCULATION PUMPS IF REQUIRED FOR PIPING RECONFIGURATION.
6. DISCONNECT AND REMOVE DIFFERENTIAL PRESSURE SWITCH FOR PIPING MODIFICATIONS. SWITCH TO BE REINSTALLED AS PART OF NEW WORK.
7. DEMOLISH FLOW METER, FT-320. POWER AND SIGNAL CIRCUITS TO BE REUSED FOR NEW FLOW METER.
8. DEMOLISH (4) PRESSURE SWITCHES AND (1) PRESSURE TRANSMITTER. DEMOLISH SIGNAL CIRCUITS BACK TO CONTROL PANEL 'I/F'.
9. DEMOLISH VALVE OPERATORS ASSOCIATED WITH MV-410A AND MV-410B. POWER AND SIGNAL CIRCUITS TO REMAIN FOR CONNECTION OF NEW VALVE OPERATORS.

E# SEE SHEET E4 FOR ELECTRICAL EQUIPMENT SCHEDULE

STATE OF ALASKA 49TH
John A. Pepe
EE 12053
REGISTERED PROFESSIONAL ENGINEER
10/19/16

EDC, INC.
213 W. FIREWEED LANE
ANCHORAGE, AK 99503
(907) 276-7933
LICENSE NO. AECC705

BETHEL ALASKA

DOWL
AECL848
WWW.DOWL.COM
3535 College Road, #100
Fairbanks, Alaska 99709
907-374-0275

INSTITUTIONAL CORRIDOR PIPED WATER SYSTEM
BETHEL, ALASKA

ELECTRICAL POWER AND SIGNAL DEMOLITION PLAN

PROJECT	61833
DATE	10/19/2016

© DOWL 2016

SHEET
E2

p:\Projects\DOWL\bethel ic piped water system\Dwgs\Elec\E2 ELECTRICAL POWER AND SIGNAL DEMOLITION PLAN.dwg
PLOT DATE 2016-10-19 10:16 SAVED DATE 2016-10-13 09:48

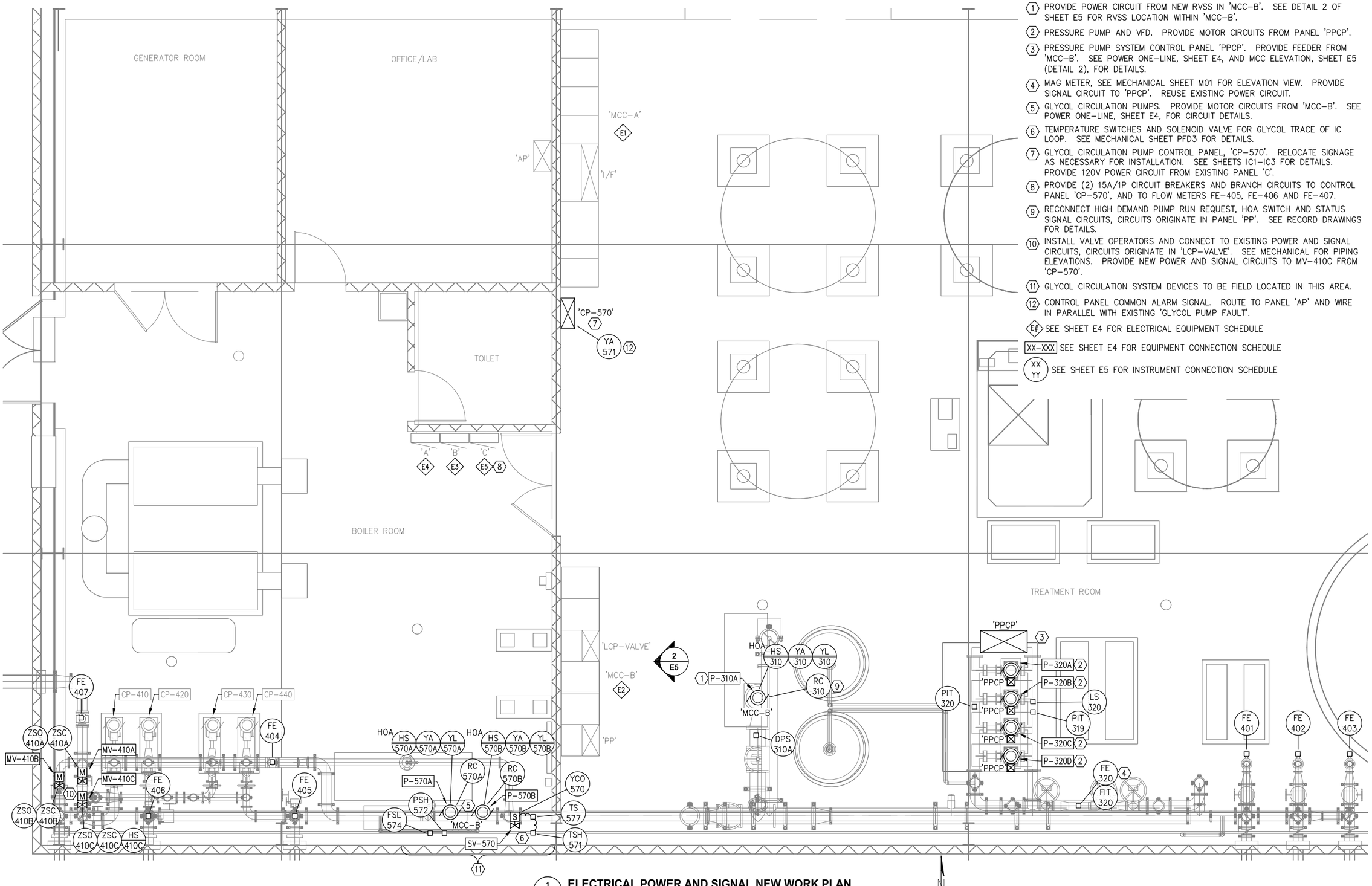

1 E3 **ELECTRICAL POWER AND SIGNAL NEW WORK PLAN**

SCALE: 3/8" = 1'-0"

SHEET NOTES

1. PROVIDE POWER CIRCUIT FROM NEW RVSS IN 'MCC-B'. SEE DETAIL 2 OF SHEET E5 FOR RVSS LOCATION WITHIN 'MCC-B'.
2. PRESSURE PUMP AND VFD. PROVIDE MOTOR CIRCUITS FROM PANEL 'PPCP'.
3. PRESSURE PUMP SYSTEM CONTROL PANEL 'PPCP'. PROVIDE FEEDER FROM 'MCC-B'. SEE POWER ONE-LINE, SHEET E4, AND MCC ELEVATION, SHEET E5 (DETAIL 2), FOR DETAILS.
4. MAG METER, SEE MECHANICAL SHEET M01 FOR ELEVATION VIEW. PROVIDE SIGNAL CIRCUIT TO 'PPCP'. REUSE EXISTING POWER CIRCUIT.
5. GLYCOL CIRCULATION PUMPS. PROVIDE MOTOR CIRCUITS FROM 'MCC-B'. SEE POWER ONE-LINE, SHEET E4, FOR CIRCUIT DETAILS.
6. TEMPERATURE SWITCHES AND SOLENOID VALVE FOR GLYCOL TRACE OF IC LOOP. SEE MECHANICAL SHEET PFD3 FOR DETAILS.
7. GLYCOL CIRCULATION PUMP CONTROL PANEL, 'CP-570'. RELOCATE SIGNAGE AS NECESSARY FOR INSTALLATION. SEE SHEETS IC1-IC3 FOR DETAILS. PROVIDE 120V POWER CIRCUIT FROM EXISTING PANEL 'C'.
8. PROVIDE (2) 15A/1P CIRCUIT BREAKERS AND BRANCH CIRCUITS TO CONTROL PANEL 'CP-570', AND TO FLOW METERS FE-405, FE-406 AND FE-407.
9. RECONNECT HIGH DEMAND PUMP RUN REQUEST, HOA SWITCH AND STATUS SIGNAL CIRCUITS, CIRCUITS ORIGINATE IN PANEL 'PP'. SEE RECORD DRAWINGS FOR DETAILS.
10. INSTALL VALVE OPERATORS AND CONNECT TO EXISTING POWER AND SIGNAL CIRCUITS, CIRCUITS ORIGINATE IN 'LCP-VALVE'. SEE MECHANICAL FOR PIPING ELEVATIONS. PROVIDE NEW POWER AND SIGNAL CIRCUITS TO MV-410C FROM 'CP-570'.
11. GLYCOL CIRCULATION SYSTEM DEVICES TO BE FIELD LOCATED IN THIS AREA.
12. CONTROL PANEL COMMON ALARM SIGNAL. ROUTE TO PANEL 'AP' AND WIRE IN PARALLEL WITH EXISTING 'GLYCOL PUMP FAULT'.

E# SEE SHEET E4 FOR ELECTRICAL EQUIPMENT SCHEDULE

XX-XXX SEE SHEET E4 FOR EQUIPMENT CONNECTION SCHEDULE

XX YY SEE SHEET E5 FOR INSTRUMENT CONNECTION SCHEDULE

STATE OF ALASKA 49TH John A. Pepe EE 12053 REGISTERED PROFESSIONAL ENGINEER 10/19/16

EDC, INC.
213 W. FIREWEED LANE
ANCHORAGE, AK 99503
(907) 278-7933
LICENSE NO. AECC705

BETHEL ALASKA

DOWL
WWW.DOWL.COM
3535 College Road, #100
Fairbanks, Alaska 99709
907-374-0275
AECL848

INSTITUTIONAL CORRIDOR PIPED WATER SYSTEM
BETHEL, ALASKA

ELECTRICAL POWER AND SIGNAL NEW WORK PLAN

PROJECT	61833
DATE	10/19/2016

© DOWL 2016

SHEET

E3

p:\Projects\DOWL\bethel ic piped water system\Dwgs\Elec\E3 ELECTRICAL POWER AND SIGNAL NEW WORK PLAN.dwg
PLOT DATE 2016-10-19 10:16 SAVED DATE 2016-10-19 09:34

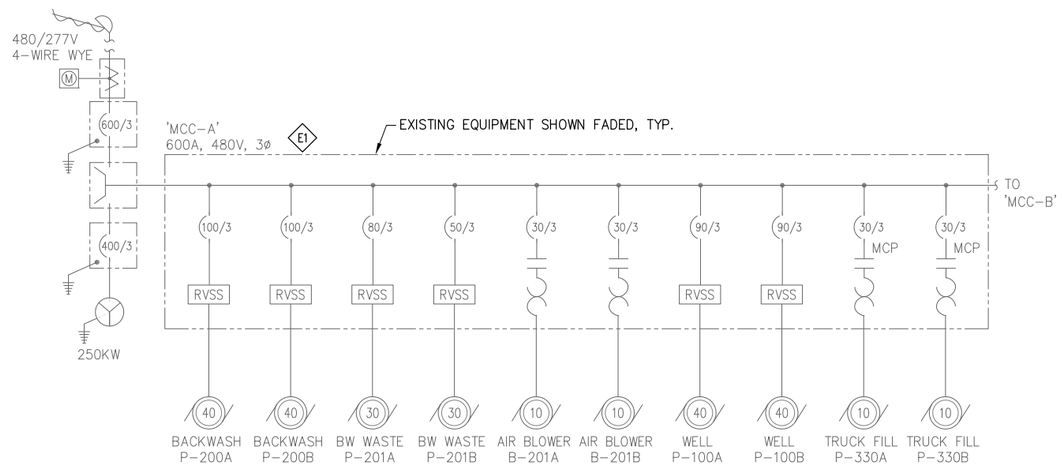

1 E4 **POWER ONE-LINE MCC-A**
SCALE: NTS

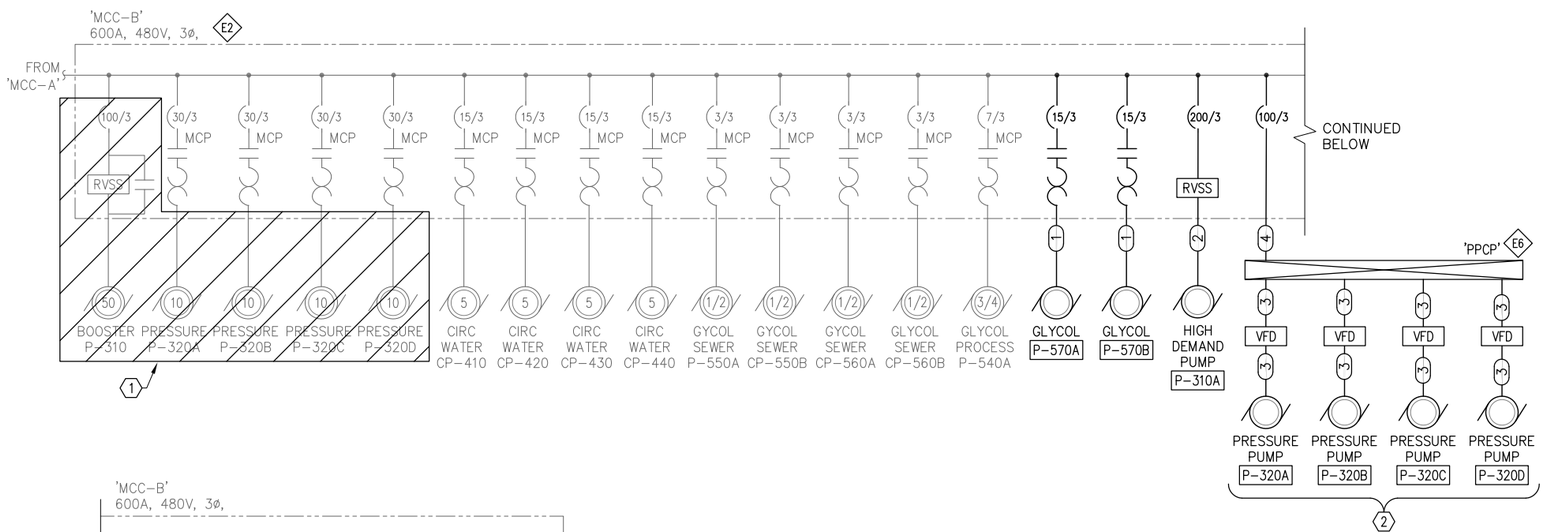

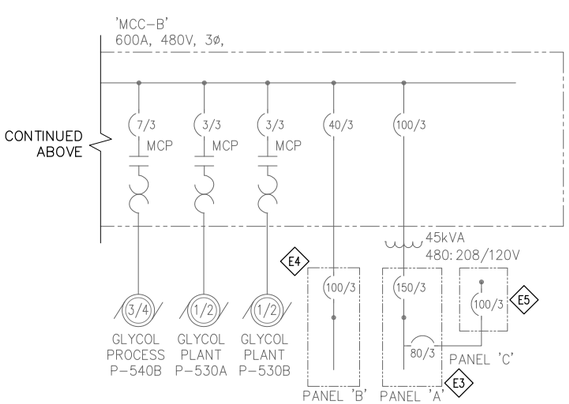

2 E4 **POWER ONE-LINE MCC-B**
SCALE: NTS

VOLTAGE: 208/120
BUS: 100A
MAIN: 100A MCB

PANEL 'C' SCHEDULE
LOCATION: BOILER ROOM

MIN. A.I.C. RATING: 10,000
ENCLOSURE: NEMA 12
MOUNTING: SURFACE

CKT	AMP TRIP	LOAD DESCRIPTION	KVA	LOAD	A	B	C	LOAD	KVA	LOAD DESCRIPTION	AMP TRIP	CKT
1	20/1	LCP-GS2	0.8		3.0				2.2	LCP-F1	30/1	2
3	20/1	LCP-GS1	0.8			3.0			2.2	LCP-F2	30/1	4
5	20/1	LCP-CP	0.4				2.6		2.2	LCP-F3	30/1	6
7	20/1	LCP-PP	0.5		1.0				0.5	LCP-OPERATOR IF-BW	20/1	8
9	20/1	ABOVE-LAB J-BOX LCP	0.1			0.2			0.1	LCP-TRUCK FILL	20/1	10
11	20/1	LCP-AP	0.1				1.5		1.4	LCP-WELL PREHEAT	20/1	12
13	20/1	LCP TURBIDIMETER			0.6				0.6	LCP-CHEM OUTLETS	20/1	14
15	20/1	FUME HOOD				0.5			0.5	LCP-BS	20/1	16
17	20/1	GLYCOL PUMP					0.4		0.4	SPRINKLER BELL	20/1	18
19					2.0				2.0	CEILLING FANS	20/1	20
21						0.1		C	0.1	**CONTROL PANEL 'CP-570'**	**15/1**	22
23							0.1	C	0.1	**FLOW METERS FE-401 THRU FE-407**	**15/1**	24
*					6.6	3.8	4.6					

3

TOTAL KVA: **15.0**
AMPS: **41.6**

SUMMARY BY LOAD TYPE		CONNECTED KVA PH A	PH B	PH C	FEED	TOTAL KVA	NEC%	NEC TOTAL	NOTES:
L	LIGHTING	0.0	0.0	0.0		0.0	1.25	0.0	
R	RECEPTACLES	0.0	0.0	0.0		0.0	10K+50%	0.0	
M	MOTORS	0.0	0.0	0.0		0.0	1.00	0.0	
LM	LARGEST MOTOR	0.0	0.0	0.0		0.0	1.25	0.0	
C	CONTINUOUS	0.0	0.1	0.1		0.2	1.25	0.3	
N	NON-CONTINUOUS	0.0	0.0	0.0		0.0	1.00	0.0	
S	SPARE	0.0	0.0	0.0		0.0	1.00	0.0	
X	NON-COINCIDENT	0.0	0.0	0.0		0.0	0.00	0.0	
O	OTHER	0.0	0.0	0.0		0.0	1.00	0.0	
F	FEEDER	0.0	0.0	0.0					
TOTAL KVA (PHASE)		0.0	0.1	0.1		0.2		0.3	
TOTAL AMPERES		0.0	0.8	0.8		0.6		0.7	
PHASE BALANCE, ABC		A-B	B-C	C-A					
PERCENT									

SHEET NOTES

1. DEMOLISH POWER CIRCUITS AND P-310 RVSS AND CIRCUIT BREAKER. PRESSURE PUMP CIRCUIT BREAKERS AND MOTOR STARTERS TO REMAIN; RE-LABEL BUCKET DOORS AS SPARE.
2. PRESSURE PUMPS CONFIGURED FOR (3) ACTIVE, (1) SPARE.
3. PROVIDE NEW CIRCUIT BREAKERS. PROVIDE REVISED PANEL SCHEDULE, TYPED WITH MACHINE PRINT FONT.

ELECTRICAL EQUIPMENT SCHEDULE

ITEM NO.	DESCRIPTION	MANUFACUTURER OR EQUAL
E1	EXISTING 'MCC-A': 600A, 480V, 3ø	CUTLER-HAMMER
E2	EXISTING 'MCC-B': 600A, 480V, 3ø	CUTLER-HAMMER
E3	EXISTING PANEL 'A': 200A, 208/120V, 3ø	CUTLER-HAMMER
E4	EXISTING PANEL 'B': 100A, 480/277V, 3ø	CUTLER-HAMMER
E5	EXISTING PANEL 'C': 100A, 208/120V, 3ø	CUTLER-HAMMER
E6	NEW PRESSURE PUMP CONTROL PANEL 'PPCP'	GRUNDFOS

CIRCUIT SCHEDULE

TAG	DESCRIPTION
1	1/2"C, (4)#12 (3H, G)
2	1-1/4"C, (3)#1 (3H) & (1)#6 (G)
3	1/2"C, (4)#10 (3H, G)
4	1-1/4"C, (4)#3 (3H, N) & (1)#8 (G)

SERVICE LOAD SUMMARY

EXISTING LOAD		
UTILITY PEAK DEMAND (12 MONTH)	=	86.4 KVA
NEC 220.87 X 0.25	=	21.6 KVA
	=	108.0 KVA
REMOVED LOAD		
50HP BOOSTER PUMP P-310	=	-54.0 KVA
(4)10HP PRESSURE PUMPS P-320A THROUGH P-320D	=	-46.6 KVA
NEW LOAD		
75HP HIGH DEMAND PUMP P-310A	=	76.2 KVA
(3) 15HP PRESSURE PUMPS P-320A THROUGH P-320D	=	50.2 KVA
(2) 2HP GLYCOL CIRCULATION PUMPS P-570A & P-570B	=	5.4 KVA
(7) FLOW METERS FE-401 – FE-407	=	0.1KVA
CONTROL PANEL 'CP-570'	=	0.1KVA
TOTAL NEW LOAD	=	139.7 KVA
TOTAL NEW CURRENT @480V, 3-ø	=	168.0 A

EQUIPMENT CONNECTION SCHEDULE

TAG ID	LOAD KVA	HP	FLA	V	PH	CIRCUIT SIZE	NOTES
P-570A	–	2	–	480	3	SEE CIRCUIT SCHEDULE, THIS SHEET	
P-570B	–	2	–	480	3	SEE CIRCUIT SCHEDULE, THIS SHEET	
P-310A	–	75	–	480	3	SEE CIRCUIT SCHEDULE, THIS SHEET	
P-320A	–	15	–	480	3	SEE CIRCUIT SCHEDULE, THIS SHEET	
P-320B	–	15	–	480	3	SEE CIRCUIT SCHEDULE, THIS SHEET	
P-320C	–	15	–	480	3	SEE CIRCUIT SCHEDULE, THIS SHEET	
P-320D	–	15	–	480	3	SEE CIRCUIT SCHEDULE, THIS SHEET	
PPCP	–	–	–	–	–	SEE CIRCUIT SCHEDULE, THIS SHEET	

STATE OF ALASKA 49TH John A. Pepe EE 12053 REGISTERED PROFESSIONAL ENGINEER
10/19/16

EDC, INC.
213 W. FIREWEED LANE
ANCHORAGE, AK 99503
(907) 276-7933
LICENSE NO. AECC705

BETHEL ALASKA

DOWL
WWW.DOWL.COM
3535 College Road, #100
Fairbanks, Alaska 99709
907-374-0275
AECL848

INSTITUTIONAL CORRIDOR PIPED WATER SYSTEM
BETHEL, ALASKA

POWER ONE-LINE AND PANEL SCHEDULE

PROJECT 61833
DATE 10/19/2016

© DOWL 2016

SHEET
E4

p:\Projects\DOWL\bethel ic piped water system\Dwgs\Elec\E4 POWER ONE-LINE AND PANEL SCHEDULE.dwg
PLOT DATE 2016-10-19 10:17 SAVED DATE 2016-10-19 08:24

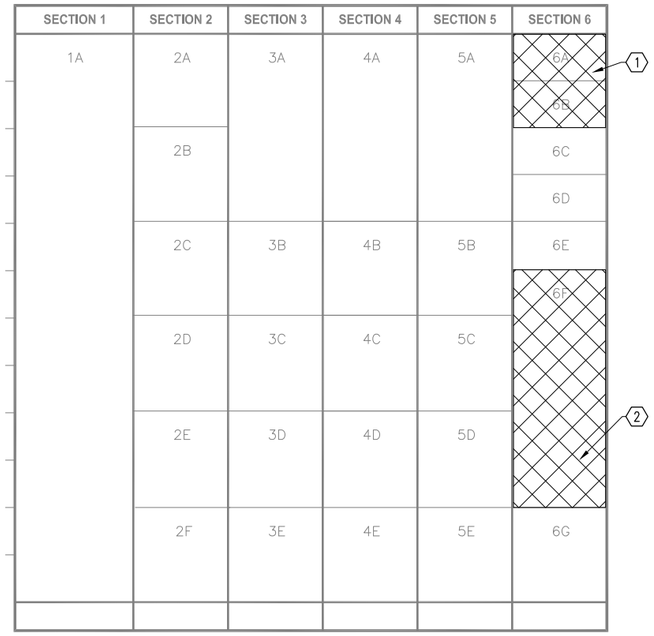

SPACE	DESCRIPTION
1A	PRESSURE PUMP CONTROL PANEL 'PP'
2A	PRESSURE P-320A
2B	PRESSURE P-320B
2C	PRESSURE P-320C
2D	PRESSURE P-320D
2E	PANEL 'B'
2F	PANEL 'A'
3A	CIRCULATION PUMP CONTROL PANEL
3B	CIRCULATION WATER CP-410
3C	CIRCULATION WATER CP-420
3D	CIRCULATION WATER CP-430
3E	CIRCULATION WATER CP-440
4A	LOOP VALVE CONTROL PANEL
4B	GLYCOL PR P-530A
4C	GLYCOL PR P-530B
4D	GLYCOL PR P-540A
4E	GLYCOL PR P-540B
5A	SEWER GLYCOL PUMP CP
5B	GLYCOL SE P-550A
5C	GLYCOL SE P-550B
5D	GLYCOL SE P-560A
5E	GLYCOL SE P-560B
6A	SPACE
6B	SPACE
6C	SPACE
6D	SPACE
6E	SPACE
6F	HIGH DEMAND P-310
6G	SPACE

1 / E5 **'MCC-B' ELEVATION - DEMOLITION**

SCALE: NTS

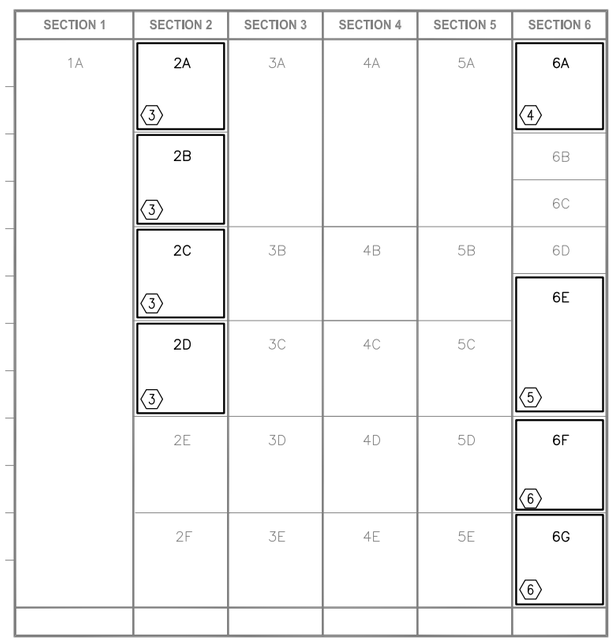

SPACE	DESCRIPTION
1A	PRESSURE PUMP CONTROL
2A	SPARE
2B	SPARE
2C	SPARE
2D	SPARE
2E	PANEL 'B'
2F	PANEL 'A'
3A	CIRCULATION PUMP CONTROL PANEL
3B	CIRCULATION WATER CP-410
3C	CIRCULATION WATER CP-420
3D	CIRCULATION WATER CP-430
3E	CIRCULATION WATER CP-440
4A	LOOP VALVE CONTROL PANEL
4B	GLYCOL PR P-530A
4C	GLYCOL PR P-530B
4D	GLYCOL PR P-540A
4E	GLYCOL PR P-540B
5A	SEWER GLYCOL PUMP CP
5B	GLYCOL SE P-550A
5C	GLYCOL SE P-550B
5D	GLYCOL SE P-560A
5E	GLYCOL SE P-560B
6A	'PPCP' DISCONNECT
6B	SPACE
6C	SPACE
6D	SPACE
6E	HIGH DEMAND P-310A
6F	GLYCOL CIR. P-570A
6G	GLYCOL CIR. P-570B

2 / E5 **'MCC-B' ELEVATION - NEW WORK**

SCALE: NTS

SHEET NOTES

1. DEMOLISH SPARE HALF SPACE-FACTOR DOORS.
2. DEMOLISH HIGH DEMAND PUMP P-310 RVSS, BYPASS CONTACTOR, CIRCUIT BREAKER AND BUCKET DOOR.
3. RE-LABEL AS "SPARE".
4. PROVIDE 100A FEEDER CIRCUIT BREAKER. PROVIDE LABEL, "PCCP DISCONNECT".
5. HIGH DEMAND PUMP RVSS. PROVIDE LABEL, P-310A.
6. MOTOR STARTERS FOR GLYCOL CIRCULATION PUMP. PROVIDE LABEL, "P-570A" OR "P-570B" AS APPLICABLE.

GENERAL SHEET NOTES

1. MCC TO BE LISTED TO UL845.

INSTRUMENT CONNECTION SCHEDULE

TAG ID	SIGNAL CIRCUIT SIZE	DESTINATION	POWER CIRCUIT SIZE (IF REQUIRED)	DESTINATION	NOTES
PIPED WATER SYSTEM					
HS-310 YA-310 YL-310 RC-310 DPS-310A	1"C (11)#14 (10SIG, G)	'I/F'			
PIT-319 PIT-320	3/4"C, (2)1PR#18 TWSH	'PPCP'			
FE-320	1/2"C, MANUFACTURER SUPPLIED CABLE	FIT-320			
FIT-320	1/2"C, 1PR#18 TWSH	'I/F'	1/2"C, (3)#12 (H, N, G)	'I/F'	
LS-320	1/2"C, (3)#14 (2SIG, G)	'PPCP'			
FE-401	1/2"C, 1PR#18 TWSH	'I/F'	1/2"C, (3)#12 (H,N,G)	'C'	
FE-402	1/2"C, 1PR#18 TWSH	'I/F'	1/2"C, (3)#12 (H,N,G)	'C'	
FE-403	1/2"C, 1PR#18 TWSH	'I/F'	1/2"C, (3)#12 (H,N,G)	'C'	
FE-404	1/2"C, 1PR#18 TWSH	'I/F'	1/2"C, (3)#12 (H,N,G)	'C'	
FE-405	–	–	1/2"C, (3)#12 (H,N,G)	'C'	
FE-406	–	–	1/2"C, (3)#12 (H,N,G)	'C'	
FE-407	–	–	1/2"C, (3)#12 (H,N,G)	'C'	
ZSO-410A ZSC-410A	1/2"C, (3)#14 (2SIG, G)	'LCP-VALVE'	1/2"C, (3)#12 (H, N, G)	'LCP-VALVE'	
ZSO-410B ZSC-410B	1/2"C, (3)#14 (2SIG, G)	'LCP-VALVE'	1/2"C, (3)#12 (H, N, G)	'LCP-VALVE'	
ZSO-410C ZSC-410C	1/2"C, (3)#14 (2SIG, G)	'CP-570'	1/2"C, (3)#12 (H, N, G)	'CP-570'	
HS-410C	1/2"C, (3)#14 (2SIG, G)	'CP-570'			
GLYCOL CIRCULATION SYSTEM					
HS-570A YA-570A YL-570A	3/4"C, (7)#14 (6SIG, G)	'MCC-B'			
HS-570B YA-570B YL-570B	3/4"C, (7)#14 (6SIG, G)	'MCC-B'			
YCO-570	1/2"C, (3)#14 (2SIG, G)	'CP-570'	1/2"C, (3)#12 (H, N, G)	'CP-570'	
TSH-571 RC-570A RC-570B PSH-572 FSL-574 TS-577	1"C, (13)#14 (12SIG, G)	'CP-570'			
YA-571	1/2"C, (3)#14 (2SIG, G)	'AP'			

STATE OF ALASKA 49TH John A. Pepe EE 12053 REGISTERED PROFESSIONAL ENGINEER 10/19/16

EDC, INC.
213 W. FIREWEED LANE
ANCHORAGE, AK 99503
(907) 276-7933
LICENSE NO. AECC705

BETHEL ALASKA

DOWL
WWW.DOWL.COM
3535 College Road, #100
Fairbanks, Alaska 99709
907-374-0275
AECL848

INSTITUTIONAL CORRIDOR PIPED WATER SYSTEM
BETHEL, ALASKA

'MCC-B' ELEVATION PLAN AND INSTRUMENTATION SCHEDULE

PROJECT	61833
DATE	10/19/2016

© DOWL 2016

SHEET
E5

Projects\DOWL\bethel ic piped water system\Dwgs\Elec\E5 'MCC-B' ELEVATION PLAN.dwg
DATE 2016-10-19 10:17 SAVED DATE 2016-10-19 09:35

ZSO-410A
ZSC-410A

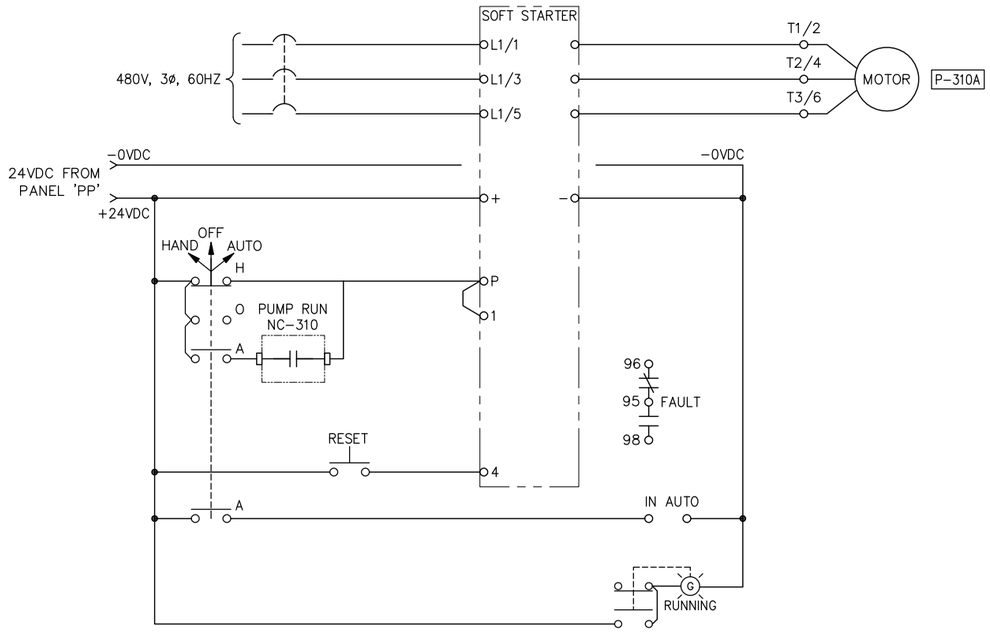

NOTE: HOA SWITCH AND PUMP RUN AND FAULT INDICATOR LIGHTS ARE EXISTING IN PANEL 'PP'.

1 / E6 **HIGH DEMAND PUMP ELEMENTARY DIAGRAM**
SCALE: NTS

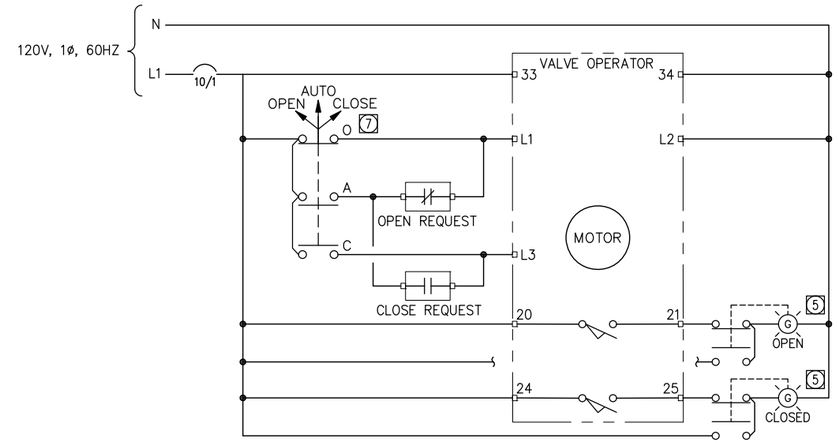

3 / E6 **VALVE OPERATOR ELEMENTARY DIAGRAM**
SCALE: NTS

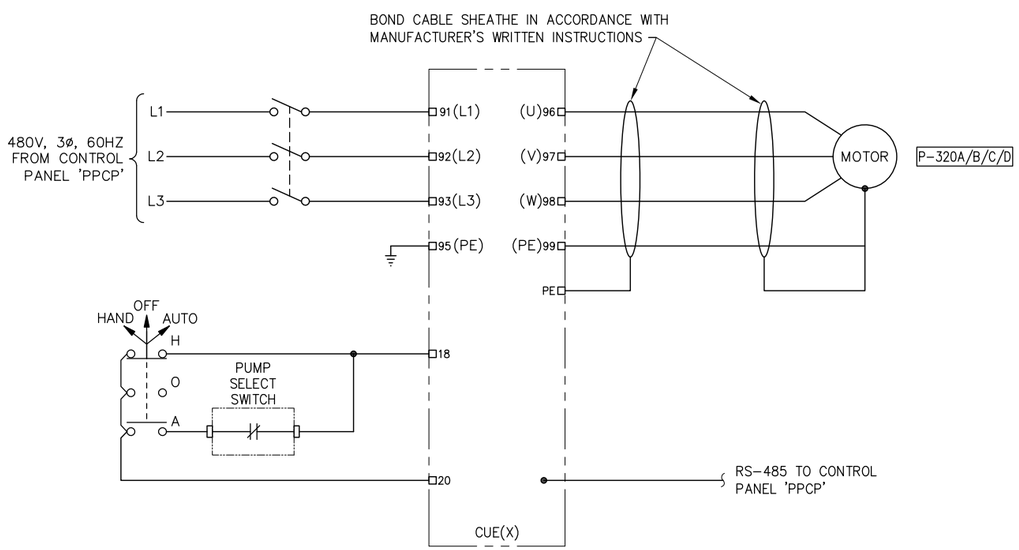

2 / E6 **PRESSURE PUMP VFD TYPICAL ELEMENTARY DIAGRAM**
SCALE: NTS

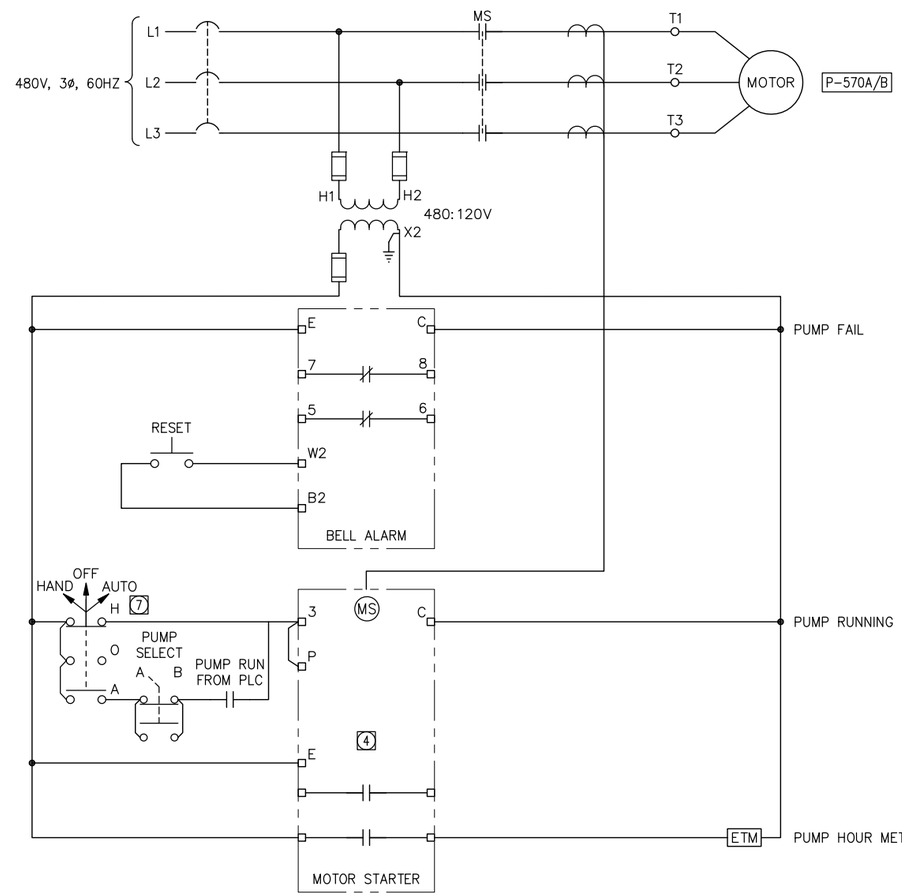

4 / E6 **GLYCOL CIRCULATION PUMP TYPICAL ELEMENTARY DIAGRAM**
SCALE: NTS

STATE OF ALASKA 49TH
John A. Pepe
EE 12053
REGISTERED PROFESSIONAL ENGINEER
10/19/16

EDC, INC.
213 W. FIREWEED LANE
ANCHORAGE, AK 99503
(907) 276-7933
LICENSE NO. AECC705

BETHEL ALASKA

DOWL
WWW.DOWL.COM
3535 College Road, #100
Fairbanks, Alaska 99709
907-374-0275
AECL848

INSTITUTIONAL CORRIDOR PIPED WATER SYSTEM
BETHEL, ALASKA

ELECTRICAL DETAILS

PROJECT	61833
DATE	10/19/2016

© DOWL 2016

SHEET
E6

p:\Projects\DOWL\bethel ic piped water system\Dwgs\Elec\E6 ELECTRICAL DETAILS.dwg
PLOT DATE 2016-10-19 10:17 SAVED DATE 2016-10-19 10:15

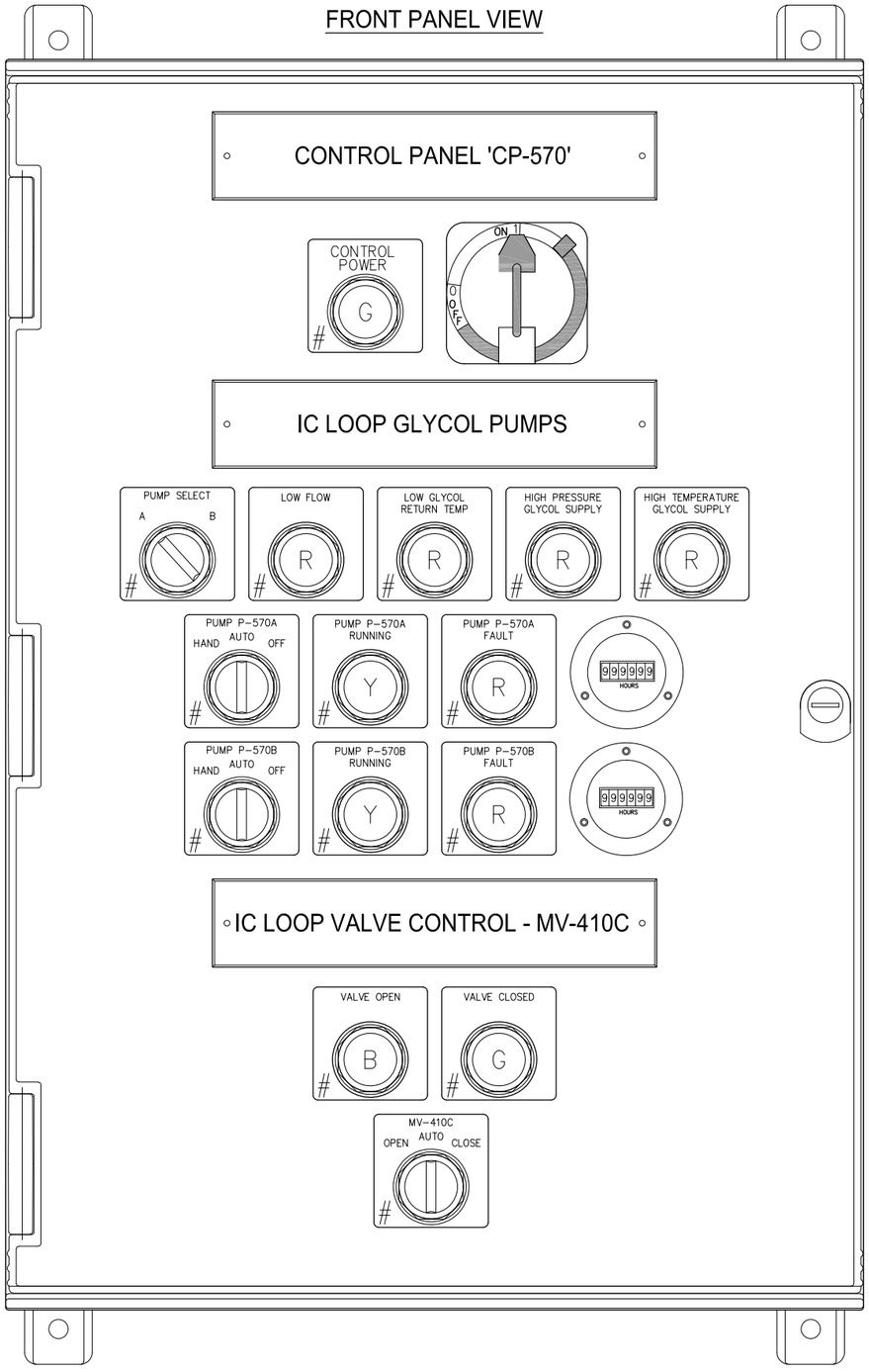

1 / IC1 **IC LOOP CONTROL PANEL LAYOUT**
SCALE: NTS

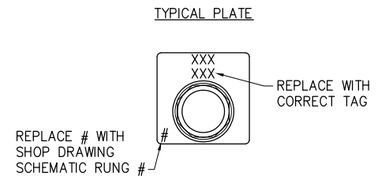

FUNCTIONAL NARRATIVE

1. THE IC LOOP GLYCOL CIRCULATION PUMPS P-570A AND P-570B, AND THE IC LOOP CONTROL VALVE MV-410C ARE CONTROLLED BY THIS PANEL.

2. GLYCOL CIRCULATION PUMPS P-570A AND P-570B HAVE HAND-OFF-AUTO (HOA) MODES OF OPERATION SELECTED LOCALLY BY A SELECTOR SWITCH ON THEIR RESPECTIVE MOTOR STARTERS, LOCATED IN MCC-B. WHEN IN THE 'HAND' POSITION, THE PUMP WILL RUN CONTINUOUSLY UNLESS A MOTOR, HIGH TEMPERATURE OR HIGH PRESSURE FAULT OCCURS. WHEN SET IN THE 'AUTO' POSITION, THE PUMP RESPONDS TO START/STOP SIGNALS RECEIVED FROM THIS CONTROL PANEL.

3. AUTO MODE: FOR OPERATION IN AUTO-MODE, BOTH PUMP HOA SWITCHES MUST BE SET IN THE 'AUTO' POSITION. A PUMP SELECT SWITCH DETERMINES WHICH PUMP WILL LEAD, WITH THE SECOND PUMP SERVING AS A BACKUP. WITH THE ABOVE TRUE, AND CONTROL POWER ON, THE LEAD PUMP WILL RUN CONTINUOUSLY UNLESS A FAULT, 'NO-FLOW', 'HIGH PRESSURE' OR 'HIGH TEMPERATURE' SIGNAL IS RECEIVED.

   A. IF A MOTOR FAULT IS RECEIVED AT THE CONTROL PANEL, THE PLC WILL SHUTDOWN THE LEAD PUMP AND AUTOMATICALLY CALL THE BACKUP PUMP TO RUN. THE FAULT CONDITION IS ANNUNCIATED AT THE CONTROL PANEL.
   B. IF A 'NO-FLOW' CONDITION IS RECEIVED AT THE CONTROL PANEL, THE PLC WILL BRIEFLY DELAY TO ALLOW THE CONDITION TIME TO CLEAR. IF AFTER A SET TIME DELAY THE 'NO-FLOW' CONDITION HAS NOT CLEARED, THE PLC WILL CALL THE BACKUP PUMP TO RUN. AN ALARM WILL BE GENERATED AT THE CONTROL PANEL.
   C. IF A 'HIGH PRESSURE' OR 'HIGH TEMPERATURE' SIGNAL IS RECEIVED AT THE CONTROL PANEL, THE PLC WILL SHUT DOWN THE OPERATING PUMP(S) AND GENERATE AN ALARM. A RESET AT THE PLC WILL BE REQUIRED TO RESTART THE PUMP(S).

ALL ALARM CONDITIONS GENERATED AT THIS CONTROL PANEL ARE COMBINED IN A GENERAL ALARM SIGNAL AND SENT TO THE ALARM PANEL, 'AP'.

3. <u>IC LOOP CONTROL VALVE - MV-410C</u>

   A. VALVE OPERATOR MV-410C IS CONTROLLED BY THIS CONTROL PANEL. MV-410C WORKS SIMILARLY TO THE EXISTING 'B' SERIES VALVES OF THE PIPED WATER SYSTEM. AUTOMATIC CONTROL OF THIS VALVE OPERATOR ONLY OCCURS DURING A HIGH DEMAND CONDITION. A HIGH DEMAND CONDITION OCCURS WHEN LOW PRESSURE IS SENSED IN ONE OF THE CIRCULATION LOOPS. THE LOOP WITH LOW PRESSURE WILL HAVE ITS ASSOCIATED 'A' SERIES VALVE CLOSE AND 'B' SERIES VALVE OPEN. IN THE CASE OF THE IC LOOP, MV-410C WILL OPEN/CLOSE CONCURRENTLY WITH MV-410B.

STATE OF ALASKA 49TH
John A. Pepe
EE 12053
REGISTERED PROFESSIONAL ENGINEER
10/19/16

EDC, INC.
213 W. FIREWEED LANE
ANCHORAGE, AK 99503
(907) 278-7933
LICENSE NO. AECC705

BETHEL ALASKA

DOWL
WWW.DOWL.COM
3535 College Road, #100
Fairbanks, Alaska 99709
907-374-0275
AECL848

INSTITUTIONAL CORRIDOR PIPED WATER SYSTEM
BETHEL, ALASKA

CONTROL PANEL LAYOUT AND FUNCTIONAL NARRATIVE

PROJECT	61833
DATE	10/19/2016

© DOWL 2016

SHEET
IC1

p:\Projects\DOWL\bethel ic piped water system\Dwgs\Elec\IC1 CONTROL PANEL LAYOUT AND FUNCTIONAL NARRATIVE.dwg
PLOT DATE 2016-10-19 10:17 SAVED DATE 2016-10-19 08:25

INSTRUMENTATION AND CONTROL EQUIPMENT SCHEDULE

REF	PART NUMBER	MFGR	DESCRIPTION
1	1769-L16ER-BBIB	AB	COMPACTLOGIX 5370 L1 PLC CONTROLLER (CPU)
2	4983-D120-20	AB	120V, 20A SURGE SUPPRESSOR
3	1606-XLS240E	AB	24VDC, 10A POWER SUPPLY
4		CUTLER-HAMMER	600V, 3-POLE MOTOR STARTER WITH 120V COIL, H-O-A SWITCH, RUN AND FAULT LIGHTS
5	800HC-QRTH10	AB	PILOT LIGHT, PUSH-TO-TEST, 120V, LED, NEMA 4X
6	NOT USED		
7	800HC-JR2A	AB	3-POSITION SELECTOR SWITCH, 120V, NEMA 4X
8	LED24V15 & ALFFSWD	HOFFMAN	24VDC, LED PANEL LIGHT WITH REMOTE DOOR SWITCH

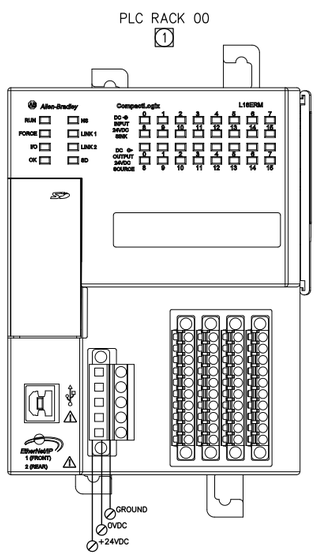

1 IC2 **PLC EQUIPMENT LAYOUT**
SCALE: NTS

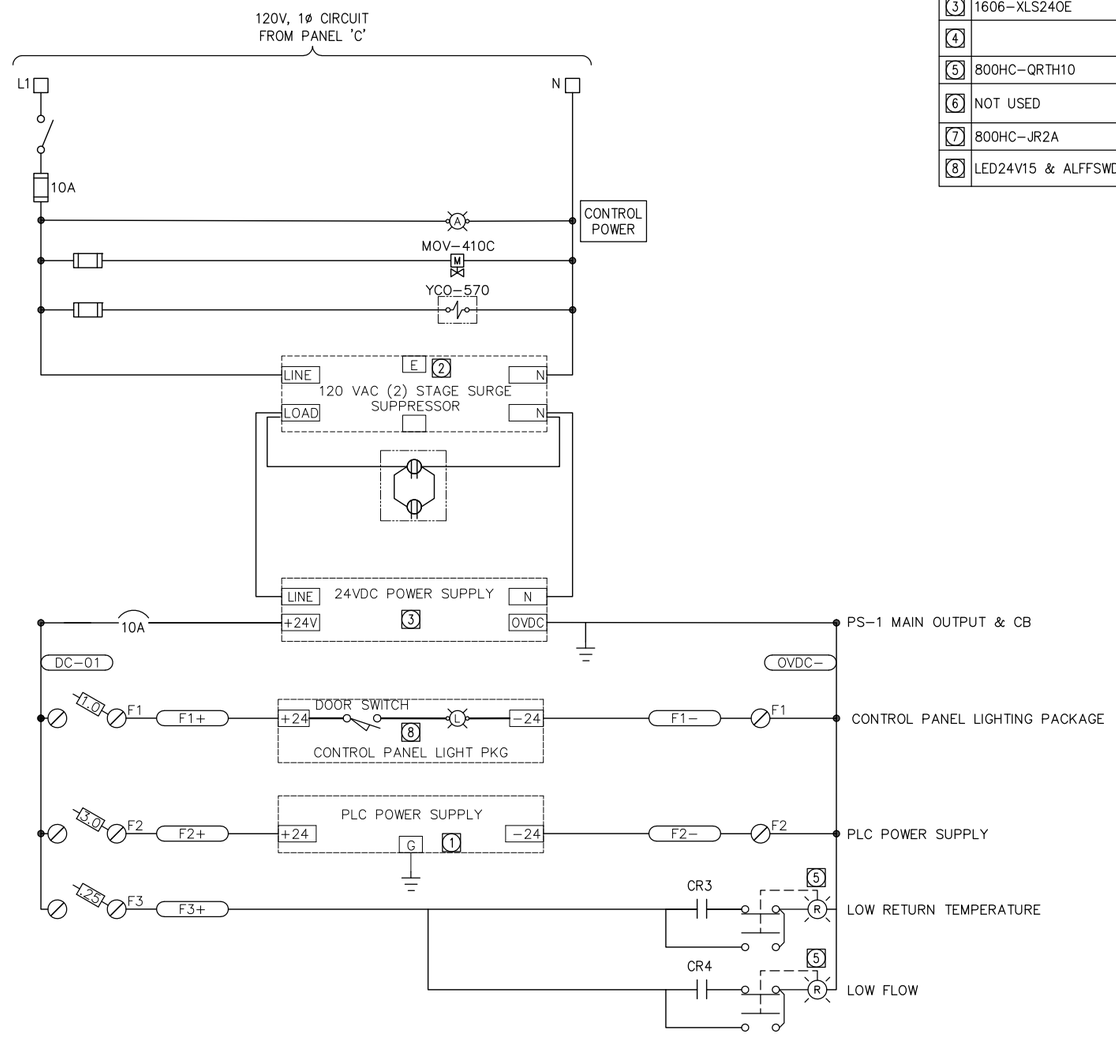

2 IC2 **CONTROL PANEL POWER DISTRIBUTION**
SCALE: NTS

STATE OF ALASKA
49TH
John A. Pepe
EE 12053
REGISTERED PROFESSIONAL ENGINEER
10/19/16

EDC, INC.
213 W. FIREWEED LANE
ANCHORAGE, AK 99503
(907) 276-7933
LICENSE NO. AECC705

BETHEL ALASKA

DOWL
WWW.DOWL.COM
3535 College Road, #100
Fairbanks, Alaska 99709
907-374-0275
AECL848

INSTITUTIONAL CORRIDOR PIPED WATER SYSTEM
BETHEL, ALASKA

PLC LAYOUT & POWER DISTRIBUTION

PROJECT	61833
DATE	10/19/2016

© DOWL 2016

SHEET
IC2

p:\Projects\DOWL\bethel ic piped water system\Dwgs\Elec\IC2 PLC LAYOUT & POWER DISTRIBUTION.dwg
PLOT DATE 2016-10-19 10:17 SAVED DATE 2016-10-19 10:14

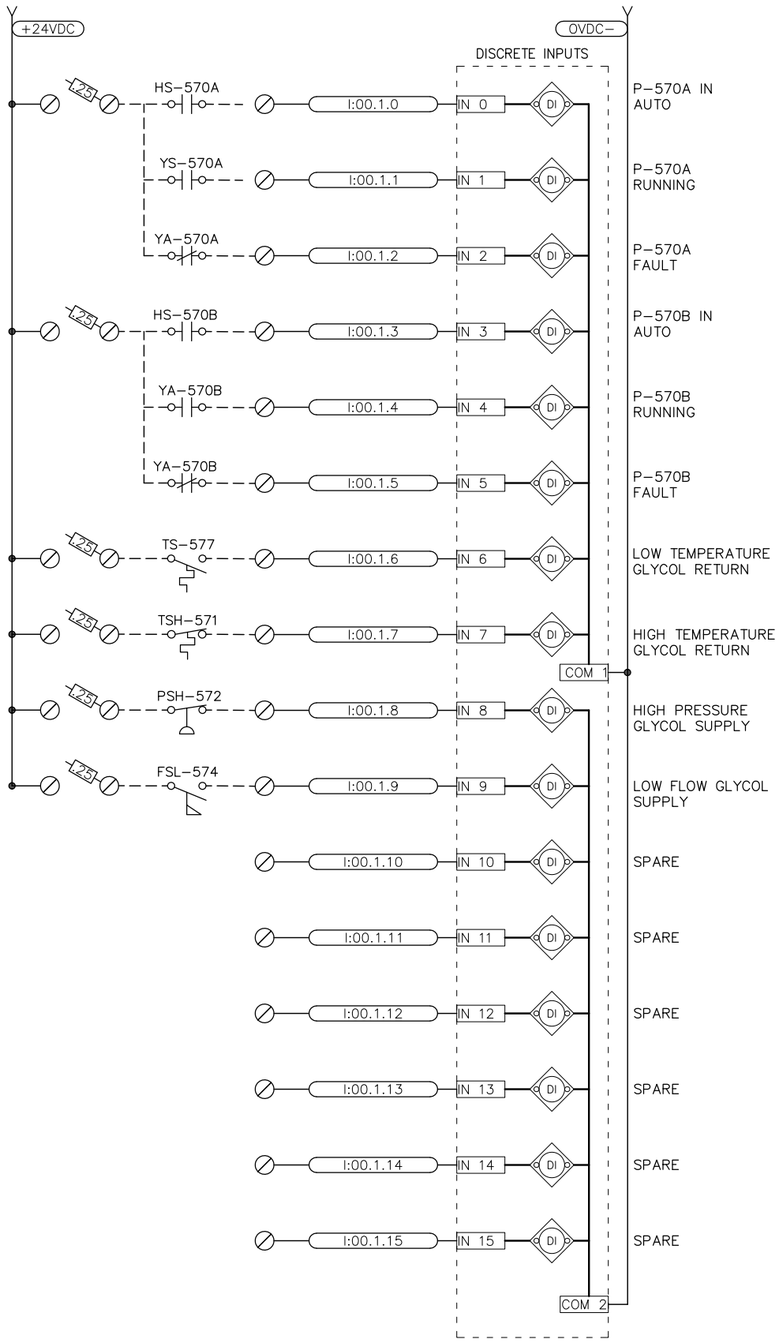

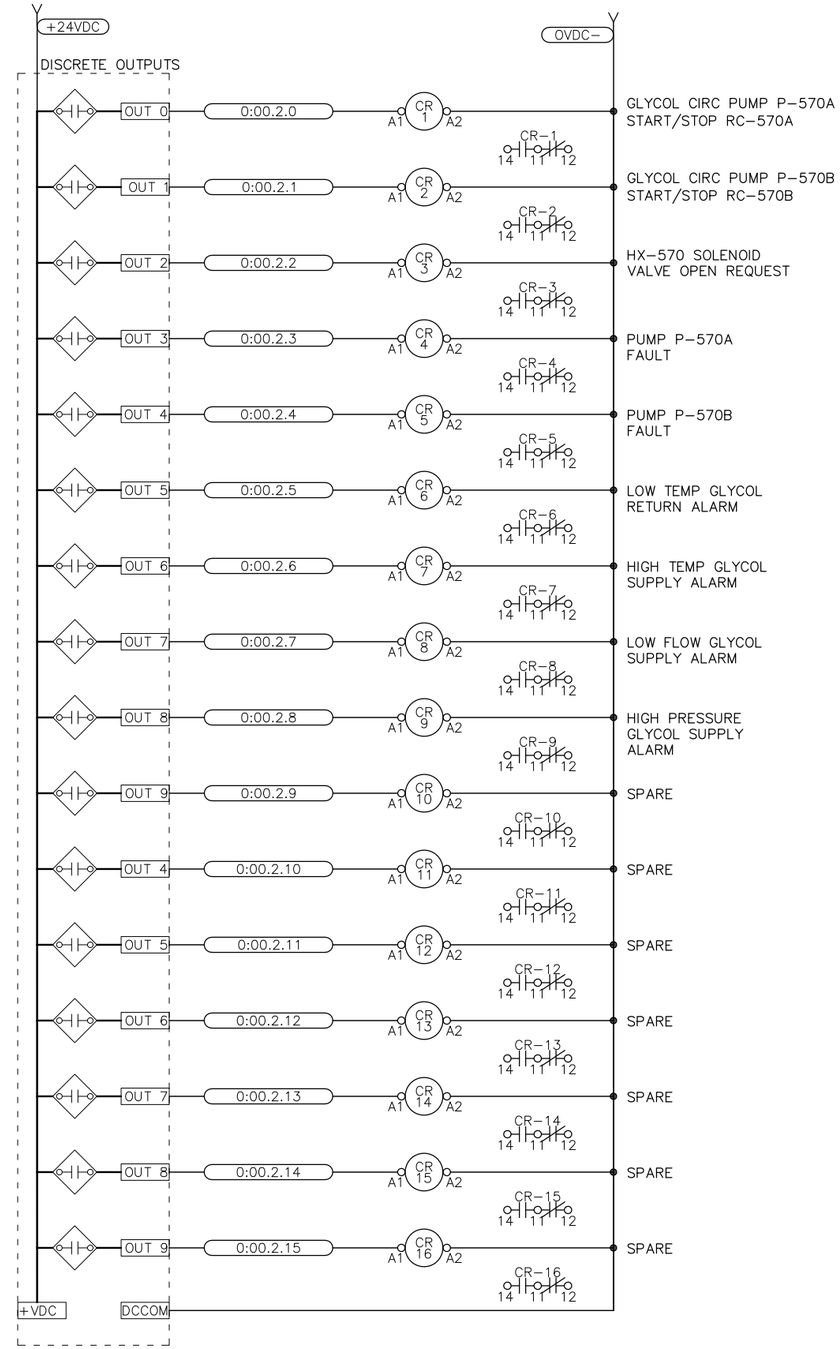

1 / IC3 **'CP-570' DISCRETE INPUTS AND OUTPUTS**

SCALE: NTS

STATE OF ALASKA 49TH John A. Pepe EE 12053 REGISTERED PROFESSIONAL ENGINEER 10/19/16

EDC, INC.
213 W. FIREWEED LANE
ANCHORAGE, AK 99503
(907) 276-7933
LICENSE NO. AECC705

DOWL
WWW.DOWL.COM
3535 College Road, #100
Fairbanks, Alaska 99709
907-374-0275
AECL848

INSTITUTIONAL CORRIDOR PIPED WATER SYSTEM
BETHEL, ALASKA

CONTROL PANEL DISCRETE INPUTS AND OUTPUTS

PROJECT	61833
DATE	10/19/2016

© DOWL 2016

SHEET
IC3

p:\Projects\DOWL\bethel ic piped water system\Dwgs\Elec\IC3 CONTROL PANEL DISCRETE INPUTS AND OUTPUTS.dwg
PLOT DATE 2016-10-19 10:17 SAVED DATE 2016-02-23 09:01